MINISTRY OF CONSUMER AFFAIRS, FOOD AND PUBLIC DISTRIBUTION

(DEPARTMENT OF CONSUMER AFFAIRS)

NOTIFICATION

New Delhi, the 7th February 2011

G.S.R. 71(E).— In exercise of the powers conferred by sub-section (1) read with clauses (c), (f), (h), (i) and (s) of sub-section (2) of section 52 of The Legal Metrology Act 2009, (1 of 2010), the Central Government hereby makes the following rules, namely

CHAPTER I

PRELIMINARY

1. Short title and commencement

(1) These rules may be called the Legal Metrology (General) Rules, 2011.

(2) They shall come into force on the 1st day of April, 2011.

2. Definitions

In these rules, unless the context otherwise requires,—

(a) "Act" means the Legal Metrology Act, 2009 (1 of 2010);

(b) "Schedule" means a Schedule appended to these rules;

(c) "Section" means a Section of the Act;

(d) words and expressions used in these rules and not defined but defined in the Act shall have the meanings respectively assigned to them in the Act.

CHAPTER II

SPECIFICATIONS OF STANDARDS OF WEIGHTS AND MEASURES

3. Reference standards

(1) Every reference standard weight shall conform, as regards denomination, material used in construction, and design, to the specifications laid down in Part I of First Schedule.

(2) The maximum permissible error in respect of any reference standard weight, on verification or re-verification after adjustment, shall be such as is specified in Part I of First Schedule.

(3) Every reference standard metre bar shall conform, as regards material used in construction, and design, to the specifications laid down in Part II of First Schedule.

(4) The maximum permissible error in respect of any reference standard metre bar, on verification or re-verification, shall be such as is specified in Part II of First Schedule.

4. Secondary standards

(1) Every secondary standard weight shall conform, as regards denomination, material used in construction, and design, to the specifications laid down in Part I of Second Schedule.

(2) The maximum permissible error in respect of any secondary standard weight, on verification or re-verification after adjustment, shall be such as is specified in Part I of Second Schedule.

(3) Every secondary standard metre bar shall conform, as regards material used in construction, and design, to the specifications laid down in Part II of Second Schedule.

(4) The maximum permissible error in respect of any secondary standard metre bar, on verification or re-verification, shall be such as is specified in Part II of Second Schedule.

(5) Every secondary standard capacity measure shall conform, as regards denomination, material used in construction, and design, to the specifications laid down in Part III of Second Schedule.

(6) The maximum permissible error in respect of any secondary standard capacity measure, on verification or re-verification after adjustment, shall be such as is specified in Part III of Second Schedule.

5. Working standards

(1) Every working standard weight shall conform, as regards denomination, material used in construction, and design, to the specifications laid down in Part I of Third Schedule.

(2) The maximum permissible error in respect of any working standard weight, on verification or re-verification after adjustment, shall be such as is specified in Part I of Third Schedule.

(3) Every working standard metre bar shall conform, as regards material used in construction, and design, to the specifications laid down in Part II of Third Schedule.

(4) The maximum permissible error in respect of any working standard metre bar, on verification or re-verification, shall be such as is specified in Part II of Third Schedule.

(5) Every working standard capacity measure shall conform, as regards denomination, material used in construction, and design, to the specifications laid down in Part III of Third Schedule.

(6) The maximum permissible error in respect of any working standard capacity measure, on verification or re-verification after adjustment, shall be such as is specified in Part III of Third Schedule.

6. Power to specify any other reference, secondary or working standard

(1) Any other reference standard, or secondary standard, or working standard shall conform as regards the denomination, material used in construction, and design, to such specifications as the Central Government may, from time to time, by notification, specify.

(2) The maximum permissible error in relation to such other reference standard, or secondary standard, or working standard shall be such as the Central Government may, from time to time, by notification, specify and different maximum permissible errors may be specified in relation to different types of reference standards, or secondary standards, or working standards.

CHAPTER III

SPECIFICATIONS OF STANDARD EQUIPMENT

7. Reference standard balances

(1) A set of reference standard balances shall be maintained at every place where the reference standard weights are kept for the purpose of verification of secondary standards.

(2) The number, types and specifications of such balances shall be as are specified in Part I of Fourth Schedule.

(3) Every reference standard balance shall be verified at least once in six months and shall be adjusted, if necessary, to make it correct within the limits of sensitivity and other metrological qualities as are specified in Part I of Fourth Schedule.

8. Secondary standard balances

(1) A set of secondary standard balances shall be maintained at every place where secondary standard weights are kept for the purpose of verification of working standards.

(2) The number, types and specifications of such balances shall be as are specified in Part II of Fourth Schedule.

(3) Every secondary standard balance shall be verified at least once in one year and shall be adjusted, if necessary, to make it correct within the limits of sensitivity and other metrological qualities as are specified in Part II of Fourth Schedule.

9. Working standard balances

(1) A set of working standard balances shall be maintained at every place where working standard weights are kept for the purpose of verification of weights intended to be used for transaction or protection.

(2) The number, types and specifications of such balances shall be as are laid down in Part III of Fourth Schedule.

(3) Every working standard balance shall be verified at least once in a year and shall be adjusted, if necessary, to make it correct within the limits of sensitivity and other metrological qualities as are specified in Part III of Fourth Schedule.

10. Power to specify the standard equipment

The Central Government may, by notification, specify such other standard equipment as it may think necessary to carry out the provisions of the Act and every such standard equipment shall conform, as regards the metrological qualities, to such specifications as the Central Government may, in the same notification or subsequent notification, specify.

CHAPTER IV

WEIGHTS OR MEASURES AND WEIGHING AND MEASURING INSTRUMENTS

11. Weights

(1) Save as otherwise provided in these rules, every weight used or intended to be used—

(a) in any transaction, or

(b) for protection,

shall conform, as regards physical characteristics, configuration, constructional details, materials, performance, tolerances and such other details, to the corresponding specifications laid down for such weight in Fifth Schedule.

(2) The maximum permissible error in respect of such weight shall be such as is specified in Fifth Schedule.

(3) Nothing in this rule shall apply to the product of an industry which is required, by or under any law for the time being in force, to conform to any other specifications with regard to the matters specified in sub-rule (1) or sub-rule (2), if, under such law, the product is required to conform to the specifications laid down by the International Organisation of Legal Metrology with regard to the matters aforesaid.

12. Measures (other than measuring instruments)

(1) Every measure used or intended to be used for—

(a) any transaction, or

(b) protection,

shall conform, as regards physical characteristics, configuration, constructional details, materials, performance, tolerances and such other details, to the corresponding specifications laid down for such measure in Sixth Schedule.

(2) The maximum permissible error in such measure shall be such as is specified in the corresponding specifications laid down for such measure in Sixth Schedule.

13. Weighing and measuring instruments

(1) Every weighing instrument used or intended to be used—

(a) in any transaction, or

(b) for protection,

shall conform, as regards physical characteristics, configuration, constructional details, materials, performance, tolerances and such other details, to the corresponding specifications laid down for such weighing instrument in Seventh Schedule:

(2) Every measuring instrument used or intended to be used—

(a) in any transaction, or

(b) for protection,

shall conform, as regards physical characteristics, configuration, constructional details, materials, performance, tolerances and such other details, to the corresponding specifications laid down for such measuring instrument in Eight Schedule.

(3) The maximum permissible error on such weighing or measuring instrument shall be such as is specified in the corresponding specifications laid down for such weighing or measuring instrument in Seventh Schedule or as the case may be in Eighth Schedule.

14. Procedure for carrying out calibration of vehicle tanks, etc.

The procedure for carrying out calibration of vehicle tanks, etc. shall be as is specified in Ninth Schedule.

CHAPTER V

IMPORT OF WEIGHTS AND MEASURES

15. Registration of importer

(1) Every manufacturer or dealer of weight or measure who intends to import any weight or measure shall apply to the Director, through the Controller of the State in which he carries on such business, for registration of his name as importer in the form specified in Tenth Schedule.

(2) Every application received by the Controller under sub-rule (1) shall be forwarded by him to the Director with a report as to the antecedents and technical capabilities of the applicant.

(3) Nothing in this rule shall take away or abridge the right of any person referred to in sub-rule (2) to carry on the business of importing of any weight or measure until he has been informed by the Director in writing that he cannot be registered as an importer, and on receipt of such letter he shall stop forthwith the import of any weight or measure:

PROVIDED that registration of a person carrying on, at the commencement of these rules, the business of importing weights or measures shall not be refused except after giving him a reasonable opportunity of showing cause against the proposed action.

(4) Every application for the registration of an importer shall be submitted to the Director, in the manner aforesaid, together with the fee specified in Twelfth Schedule, at least one month before the date on which import is proposed to be made.

(5) The registration of a person as an importer shall remain effective for a period of five years from the date of such registration.

(6) On the expiry of the period of registration as an importer, the Director may, on the application of the registered importer and on payment of the prescribed fee, renew registration for a like period.

(7) The registration or renewal of the registration of a person as an importer may be suspended or revoked before the expiry of the period of validity thereof, if the Director is satisfied after an inquiry, and after giving to the person concerned a reasonable opportunity of being heard, that any statement made by such person in the application for registration or renewal of registration was false or incorrect in material particulars or that such person has contravened any provision of the Act or rules made there under or any term or condition of such registration.

16. Conditions, etc. for manufacture of a weight or measure exclusively for export

(1) The provisions of this rule shall apply to weights or measures which are made or manufactured exclusively for the purpose of export.

(2) No non-standard weight or measure shall be made or manufactured by any person unless he has obtained the previous permission from the Central Government.

(3) Every person intending to manufacture any non-standard weight or measure for the purpose of export shall make an application for permission to the Central Government on payment of a fee of rupees five hundred for such permission authorising him to manufacture such weight or measure and shall in such application indicate—

(a) his name and full address;

(b) location of the factory in which such weight or measure is proposed to be manufactured;

(c) description of weight or measure proposed to be manufactured;

(d) documentary or other evidence indicating the existence of a firm contract for the export aforesaid or where there is no such firm contract for export, documentary or other evidence indicating that there is likely to be a demand for the export of non-standard weight or measure.

(4) The Central Government shall, if it is satisfied from the documentary or other evidence produced by the applicant or otherwise that the applicant intends to manufacture non-standard weight or measure for export, grant the permission authorising him to manufacture such weight or measure:

Provided that the Central Government may, if it is satisfied that the applicant has contravened any of terms and conditions of the permission or that weights or measures manufactured by the applicant have found their way into the Indian market or that the applicant had made any statement in his application for the permission which is false in material particulars or he had concealed some material particulars, cancel the permission:

Provided Further that no permission shall be cancelled except after giving to the applicant a reasonable opportunity of showing cause against the proposed action.

(5) Every permission granted under sub-rule (4) shall remain valid for a period of one year and shall be renewed for a like period on payment of a like fee unless the Central Government is satisfied that the applicant has made any statement in his application which is false in material particulars or that he had concealed some material particulars or had contravened any provision of the Act or any rule made there under:

Provided that no order for the refusal to renew a licence shall be made by the Central Government except after giving the applicant a reasonable opportunity of showing cause against the proposed action.

(6) Every person who is granted permission under this rule shall submit to the Central Government, at the end of the calendar year, a statement as to the quantity of the non-standard weights and measures exported by him and the particulars of the person to whom such export has been made.

17. Prohibition on sale of non-standard weight or measure within the country

No non-standard weight or measure made or manufactured exclusively for export shall be sold or otherwise distributed within the territory of India.

18. Maintenance of record in relation to non-standard weight or measure

Every person who makes or manufactures any non-standard weight or measure for export shall maintain a monthly record of the number of such non-standard weights or measures manufactured by him, number of weights or measures already exported by him, and number of weights or measures in stock or under production. The record so maintained shall be open to inspection by any officer authorised by the Central Government in this behalf.

19. Sample checking of weight and measure

(1) Standard weights or measures which are intended for export shall not ordinarily require any verification and stamping, but if the party to whom the export is to be made so requires, a sample checking of such weight or measure shall be made by such agency as the Central Government may specify in this behalf, and thereupon the agency so specified shall, after checking the weight or measure, issue a certificate indicating whether or not such weight or measure conforms to the requirements of the Act and the rules made there under.

(2) The weight or measure to be checked as sample under this rule shall be selected at random and proper records shall be maintained with regard to the sample checking so made.

(3) The Central Government shall, while specifying the agency for checking the weight or measure, ensure that the agency completes the checking well in time so that the export of the weight or measure is not delayed by reason of such checking.

20. Checking of non-standard weights and measures sample which are to be exported

(1) Non-standard weight or measure, which is made or manufactured exclusively for export, shall not ordinarily require any verification and stamping, but if the party to whom the export is to be made so requires, a sample checking of such weight or measure shall be made by such agency as the Central Government may specify in this behalf; and thereupon the agency so specified shall, after checking the weight or measure, issue a certificate indicating whether or not such weight or measure conforms to the specifications given by the party to whom the export is to be made or, where the party aforesaid has not given any specification, whether the weight or measure conforms to the specifications laid down by the manufacturer.

(2) The weight or measure to be checked as sample under this rule shall be selected at random and proper records shall be maintained with regard to the sample checking so made.

(3) The fee for checking of any non-standard weight or measure shall be—

(i) if it is similar to any standard weight or measure, equal to the fee leviable for the verification and stamping of such standard weight or measure; and

(ii) where such non-standard weight or measure is not similar to any standard weight or measure, the Central Government may specify such amount as fees as is commensurate with the labour involved in checking the non-standard weight or measure.

(4) The Central Government shall, while specifying the agency for checking the non-standard weight or measure, ensure that the agency completes the checking well in time so that the export of such weight or measure is not delayed by reason of such checking.

CHAPTER VI

NON-STANDARD WEIGHT OR MEASURE TO BE USED FOR SCIENTIFIC INVESTIGATION OR RESEARCH

21. Permission to get manufactured non-standard weight or measure for scientific investigation or research

Where the manufacture of any non-standard weight or measure is needed exclusively for the purpose of scientific investigation or research, the person needing such non-standard weight or measure shall make an application to the Central Government for permission to get such non-standard weight or measure manufactured and on receipt of such application, if the Central Government is satisfied that the manufacture of such non-standard weight or measure is needed for the purpose aforesaid, it may authorise the applicant to get the non-standard weight or measure needed by him manufactured by such manufacturer as he may think fit, and thereupon, it shall be lawful for such manufacturer to manufacture the said non-standard weight or measure in accordance with the specifications given by the applicant.

Explanation: For the purpose of this rule, a non-standard weight or measure means a weight or measure which is, or is proposed to be, manufactured in accordance with any unit of weight or measure, other than standard unit of weight of measure specified by or under the Act.

CHAPTER VII

MISCELLANEOUS

22. The manner of disposal of goods seized under this Act/rule

(1) Where any goods seized under sub-section (3) of Section 15 are subject to speedy or natural decay, the Director or any person authorised by him or Controller and other Legal Metrology Officers in this behalf shall have the goods weighed or measured on a verified weighing or measuring instrument available with him or near the place of seizure and enter the actual weight or measure of the goods in a form specified by the Director for this purpose and shall obtain the signature of the trader or his agent or such other person who has committed the offence. The goods in question shall, after such weighing or measuring is returned to the trader or the purchaser as the case may be:

PROVIDED that if the trader or his agent or the other person (who has committed the offence) refuses to sign the form, the Director or the person authorised by him in this behalf shall obtain the signature of not less than two persons present at the time of such refusal by the trader or his agent or other person.

(2) Where the goods seized under sub-section (1) are contained in a package and the package is false or does not conform to the provisions of the Act or any rules made there under and the goods in such package are subject to speedy or natural decay, the Director or any person authorised by him or Controller and other Legal Metrology Officers in this behalf, so far as may be, may dispose of the goods in such package in accordance with the provisions of sub-rule (1).

(3) Where the goods seized under sub-rule (1) are not subject to speedy or natural decay, the Director or any person authorised by him or Controller and other Legal Metrology Officers in this behalf may retain the package for the purpose of prosecution under this Act after giving the trader or his agent or the other person (who has committed the offence) a notice of such seizure.

23. Time within which unverified weight and measure to be verified and stamped

No unverified weight or measure, seized under sub-section (3) of Section 15, shall be forfeited if the person, from whom such weight or measure was seized, agrees to get the same verified and stamped within a period of ten days or such extended period from the date of such seizure; and for this purpose, the person making the seizure of such weight or measure shall afford a reasonable opportunity by

returning such weight or measure exclusively for the verification and stamping.

24. Register and reports to be maintained by persons referred to in Section 17 of the Act

(1) Every person referred to in sub-section (1) of Section 17 shall maintain a register in the appropriate form set out in Eleventh Schedule.

(2) Notwithstanding anything contained in sub-rule (1), if the Director is of the opinion that having regard to the nature or volume of the business carried on by any maker, manufacturer, dealer or repairer, it is necessary to do so, he may, by order, exempt any such maker, manufacturer, dealer or repairer from the operation of that sub-rule.

25. Scale of fee

The scale of fees to be collected for the service specified in column (2) of Twelfth Schedule shall be at the rate specified in column 3 of the said Schedule.

26. Use of regional languages

Any legend or denomination specified in any Schedule to these rules, which is required to be indicated on any weight or measure in English, or in Devanagri script, may also be indicated (in addition to English or Devanagri) on such weight or measure in such regional language as the manufacturer may consider to be practicable.

27. Periodical verification of weights or measures—

(1) Every weight or measure used or intended to be used in any transaction or for protection of living beings or things in clause (k) of Section 2 shall be verified and stamped by the Legal Metrology Officer in the State in which such weight or measure is put to use and shall be re-verified and stamped at periodical intervals.

(2) The re-verification shall be carried out on the completion of a period of,—

(a) twenty four months for all weights, capacity measures, length measures, tape, beam scale and counter machine,

(b) sixty months for storage tanks, and

(c) twelve months for all weight or measure including tank lorry other than that mentioned in clauses (a) & (b).

(3) Notwithstanding anything contained in sub-rule (2) every weight or measure which has been verified and stamped in situ shall, if it is dismantled and re-installed before the date on which the verification falls due shall be duly re-verified and stamped, before being put into use.

(4) Notwithstanding anything contained in sub-rule (1) every weight or measure which has been verified and stamped shall, if it is repaired before the date on which the verification falls due shall be duly re-verified and stamped before being put into use.

28. Qualifications of Legal Metrology Officer

(1) No person shall be appointed as Legal Metrology Officer unless he –

(a) is a graduate of a recognized university in Science (with physics as one of the subjects), technology or engineering or holds a recognized diploma in engineering with three years professional experience; and

(b) is able to speak, read and write the regional language of the State.

(2) Nothing in sub-rule (1) shall apply to officials who have been working as Legal Metrology Officer and are also eligible for promotion to the next higher grade of Legal Metrology Officer on the date of commencement of these rules.

(3) The person appointed to the post of Legal Metrology Officer shall have to successfully complete the basic training course at the Indian Institute of Legal Metrology, Ranchi before his posting.

(4) The Central Government may, in consideration of the practical difficulties faced by the State Government and on its recommendation, relax the qualification specified in sub-rule (1) for the post of legal Metrology Officers for that State.

29. Nomination of Director by a Company under the Act

Every company shall inform the Director (Legal Metrology) or the concerned Controller or his authorized officer, by notice in duplicate, in the format specified in Thirteenth Schedule containing the name and address of its Director after obtaining his consent in writing, who has been nominated by the company under sub-section (2) of Section 49 to be in-charge of and be responsible for the conduct of business of the company or any establishment, branch or unit thereof.

30. Repeal and savings

(1) The Standards of Weights and Measures (General) Rules, 1987 (herein under referred to as the said rules) are hereby repealed.

Provided that such repeal shall not affect:

(a) the previous operations of the said rules or anything done or omitted to be done or suffered therein; or

(b) any right, privilege, obligation or liability acquired, accrued or incurred under the said rules; or

(c) any penalty, forfeiture or punishment incurred in respect of any offence committed against the said rules; or

(d) any investigation, legal proceedings or remedy in respect of any such right, privilege, obligation, liability, penalty, forfeiture or punishment as aforesaid.

And any such investigation, legal proceedings or remedy may be instituted, continued or enforced and any such penalty, forfeiture or punishment may be imposed as if the said rules had not been rescinded.

(2) Notwithstanding such repeal anything done or any action taken or purported to have been done or taken including approval of letter, exemption granted, fees collected, any adjudication, enquiry or investigation commenced, license and registration of manufacturers, dealers, importers of weights and measures, non-standard weights and measures or show cause notice, decision, determination, approval, authorisation issued, given or done under the said rules shall if in force at the commencement of the said rules continue to be in force and have effect as if issued, given or done under the corresponding provisions of these rules.

(3) The provisions of these rules shall apply to any application made to the Central Government or as the case may be the State Government under the said rules for licence, registration of manufacturers, importers, dealers, repairers of weights and measures pending at the commencement of these rules and to any proceedings consequent thereon and to any registration granted in pursuance thereof.

(4) Any legal proceeding pending in any court under the said rules at the commencement of these rules may be continued in that court as if these rules had not been framed.

(5) Any appeal preferred to the Central Government or as the case may be the State Government under the said rules and pending shall be deemed to have been made under the corresponding provisions of these rules.

INDEX OF SCHEDULE OF THE LEGAL METROLOGY (GENERAL) RULES, 2011

FIRST SCHEDULE

PART I	Reference Standard Weights
PART II	Reference Standard Metre Bar

SECOND SCHEDULE

PART I	Secondary Standard Weights
PART II	Secondary Standard Metre Bar
PART III	Secondary Standard Capacity Measures

THIRD SCHEDULE

PART I	Working Standard Weights
PART II	Working Standard Metre Bar
PART III	Working Standard Capacity Measures

FOURTH SCHEDULE

PART I	Reference Standard Balances
PART II	Secondary Standard Balances
PART III	Working Standard Balances

FIFTH SCHEDULE

PART I	Weights (Other than Carat Weights)
PART II	Carat Weights
PART III	Standard Weights for testing of High Capacity Weighing Machine

SIXTH SCHEDULE

PART I	Liquid Capacity Measures
PART II	Dispensing Measures
PART III	Liquor Measures
PART IV	Length Measures (Non-Flexible)
PART V	Folding Scales
PART VI	Fabric or Plastic Tape Measures
PART VII	Steel Tape Measures
PART VIII	Surveying Chains
PART IX	Tapes for Use in Measurement of Oil Quantities

SEVENTH SCHEDULE- HEADING A

SPECIFICATIONS FOR NON-AUTOMATIC WEIGHING INSTRUMENTS

SEVENTH SCHEDULE- HEADING B

PART I	Beam Scales
PART II	Counter Machines

SEVENTH SCHEDULE- HEADING C

AUTOMATIC RAIL WEIGHBRIDGE

SEVENTH SCHEDULE- HEADING D

AUTOMATIC GRAVIMETRIC FILLING INSTRUMENTS

SEVENTH SCHEDULE- HEADING E

DISCONTINUOUS TOTALIZING AUTOMATIC WEIGHING INSTRUMENT (TOTALIZING HOPPER WEIGHERS)

EIGHTH SCHEDULE

SPECIFICATIONS FOR MEASURING INSTRUMENTS

PART I	Volumetric Container Filling Machines
PART II	Bulk Meters
PART III	Water Meters

PART IV	Measuring Systems for Liquids Other than Water
PART V	Volumetric Container Type Liquid Measuring Device
PART VI	Clinical Thermometer
PART VII	Monometers of Instruments for Measuring Arterial Blood Pressure (Sphygmomanometers)
PART VIII	Taximeter
PART IX	Compressed gaseous fuel (CNG) measuring systems for vehicles

NINTH SCHEDULE

PROCEDURE FOR CARRYING OUT CALIBRATION OF VEHICLE TANKS ETC.

PART I	Calibration of Vehicle Tanks for Petroleum Products and other Liquids
PART II	Method for Calibration of Vertical Oil Storage Tanks
PART III	Method for Computation of Capacity Tables for Vertical Oil Storage Tanks.

TENTH SCHEDULE

APPLICATION FORM FOR REGISTRATION OF IMPORTER OF WEIGHTS AND MEASURES

ELEVENTH SCHEDULE

REGISTER TO BE MAINTAINED BY THE MANUFACTURERS/DEALERS/REPAIRERS OF WEIGHTS AND MEASURES

TWELFTH SCHEDULE

SCALE OF FEE

THIRTEENTH SCHEDULE

Format for nomination of the Director by the Company

FIRST SCHEDULE

DENOMINATION, MATERIALS, SHAPE AND PERMISSIBLE ERRORS, IN RESPECT OF REFERENCE STANDARDS

[See Rule 3]

PART I REFERENCE STANDARD WEIGHTS

1. Denominations

Kilogram series	*Gram series*	*Milligram series*
(1)	(2)	(3)
5	500	500
2	200	200
2	200	200
1	100	100
	50	50
	20	20
	20	20
	10	10
	5	5
	2	2
	2	2
	1	1

2. Materials

(a) Weights of 5 kg to 1g shall be made from admiralty bronze (88 Cu, 10 Sn, 2 Zn), nickel chromium alloy (80 Ni, 20 Cr) or austenitic stainless steel (25 Ni, 20 Cr) or (20 Ni, 25 Cr).

(b) Weights of 500 mg to 10 mg shall be made from wire of either pure platinum, nickel chromium alloy (80 Ni, 20 Cr) or austenitic stainless steel (25 Ni, 20 Cr) or (20 Ni, 25 Cr).

(c) Weights of 5 mg to 1 mg shall be made of aluminium wire. Copper, silicon and zinc contained as impurities in aluminium shall not exceed 0.3 per cent in the aggregate.

Note: The material used for all the weights shall be non-magnetic and it shall be ensured that the finished weights are also practically non-magnetic.

3. Shape and finish

(a) For kilogram and gram series—

Integral cylindrical body with knob rounded at top.

(b) For milligram series—

The weights shall be made from the wire having five segments for 500, 50, 5 mg weights, two segments for 200, 20, 2 mg weights and one segment for 100, 10, and 1 mg weights. One end of the wire shall be bent at right angles for the purposes of lifting it with a pair of forceps.

(c) The denominations shall be marked only on kilogram and gram series weights.

(d) The entire surface of the weights, including their base and corners shall be free from any roughness and the surface of the weights when inspected visually shall not show any porosity and shall have a mirror finish.

4. Maximum permissible errors

Denomination	*Permissible error ± mg*
(1)	(2)
5 kg	7.5
2 kg	3.0
1 kg	1.5

(1)	(2)
500 g	0.75
200 g	0.30
100 g	0.15
50 g	0.10
20 g	0.080
10 g	0.060
5 g	0.050
2 g	0.040
1 g	0.030
500 mg	0.025
200 mg	0.020
100 mg	0.015
50 mg	0.012
20 mg	0.010
10 mg	0.008
5 mg	0.006
2 mg	0.006
1 mg	0.006

5. Protective and carrying case

(a) These weights shall be stored in their boxes made from teakwood or any other suitable non-corrosive material with proper housing lined with chemically neutral velvet, chamois leather or soft plastic material. Wood used in such boxes shall be reasonably free from resins and volatile materials. Glue shall not be used for fixing velvet or such other material. The weights shall be housed in such a manner so as to avoid their movement during transit.

(b) Each milligram weight shall be provided with a separate housing. A covering glass or a sheet of any other transparent and non-reactive and non-corrosive material shall be provided so as to ensure that these weights are not dislocated during transit.

(c) A suitable device for lifting the kilogram and gram weights covered with chamois leather or other suitable material shall be provided. A pair of forceps capable of lifting easily milligram weights shall also be provided.

6. Inscription

The boxes containing the weights shall have the following inscriptions:

(a) The words 'Reference Standards Weights'

(b) The identification number of such boxes,

(c) The name of the manufacturer,

(d) The material used for weights,

(i) kilogram and gram series,

(ii) milligram series,

(e) The year of manufacture,

(f) The verification mark of the NPL.

PART II- REFERENCE STANDARD METRE BAR

1. Material

The Reference Standard Metre Bar (hereafter called metre bar) shall be manufactured from 58 per cent nickel-steel.

2. Shape and dimensions

(a) The metre bar shall be of H-section, approximately 25 mm x 25 mm (as per Figure 1)

(b) The overall length of the metre bar shall be 1030 ±1 mm and the graduated length shall be 1008 mm.

(c) Ungraduated space of 11 mm shall be left after the last graduation mark.

3. Finish

The graduated surface shall be bright highly polished, and free from surface irregularities in the neighbourhood of the graduation marks.

4. Graduations

(a) The main scale shall be situated on the neutral plane and shall be graduated in millimetres throughout from 0 to 1000 mm.

(b) The main scale shall also have one additional mm mark before 0 and another after 1000 mm mark.

(c) An additional fine scale shall also be provided at each end of the main scale for calibrating a micrometre microscope. This fine scale shall consist of ten 0.1 mm graduations (1 mm sub-divided into 10 parts) and shall be situated before the first graduation mark after leaving a blank space of 2 mm and also after the last mark with the same blank spacing.

(d) The graduation marks shall be well-defined, of symmetrical section and have clean edges.

(e) The width of graduation marks shall be between 8 and 10 micrometres. This width shall be constant to within ten per cent over the length of each mark between the longitudinal setting lines.

(f) The graduation marks shall not differ in width one from another by more than ± 10% of the average width of all the marks.

(g) The graduation marks shall be parallel to one another to within one micrometre between the longitudinal setting lines.

(h) The graduation marks shall be square to the scale axis to within ten minutes of arc.

(i) The length of graduation marks shall be as follows :—

2 mm for half cm marks.

1 mm for mm marks.

The marks shall be disposed equally on either side of an imaginary centre line.

(j) The lengths of the graduation marks on the two fine scales referred to in 4(c) shall be as follows :—

3 mm for first and last mark.

2 mm for 0.5 mm marks.

1 mm for 0.1 mm marks.

(k) The Bessel points shall be indicated by two vertical lines marked on either external side of the metre bar. The Bessel points shall be 571 mm apart, and shall be disposed equally on either side of the 50 mm mark.

(l) No figures or numerals shall be marked on the surface of the main scale.

(m) When supported at the marked Bessel points, the graduated surface shall be flat to within 0.05 mm, i.e. all points on the surface shall be between two parallel planes 0.05 mm apart.

5. Auxiliary scale

(a) An auxiliary scale shall be marked on one of the top edges of the metre bar.

(b) The auxiliary scale shall consist of 1000 marks corresponding to the marks of the main scale.

(c) The marks of the auxiliary scale shall be collinear (i.e., passing through the same vertical planes) with the graduation marks of the main scale to within ± 0.1 mm.

(d) The width of graduation marks shall be not more than 100 micrometres and shall be clearly visible to the naked eyes having normal vision.

(e) The length of the graduation marks shall be :

2.5 mm for cm marks.

2.0 mm for half cm marks.

1.5 mm for mm marks.

One of the ends of all the marks shall lie on a straight line.

(f) The centimetre graduation marks shall be numbered in the increasing order of numeration.

(g) The height of the numerals and the letters shall be approximately 3 mm.

6. Setting lines

(a) A pair of longitudinal setting lines shall transverse the graduation marks and shall be parallel to the scale axis to within one minute of arc.

(b) The two longitudinal lines shall be disposed symmetrically on either side of the centre of the graduation marks.

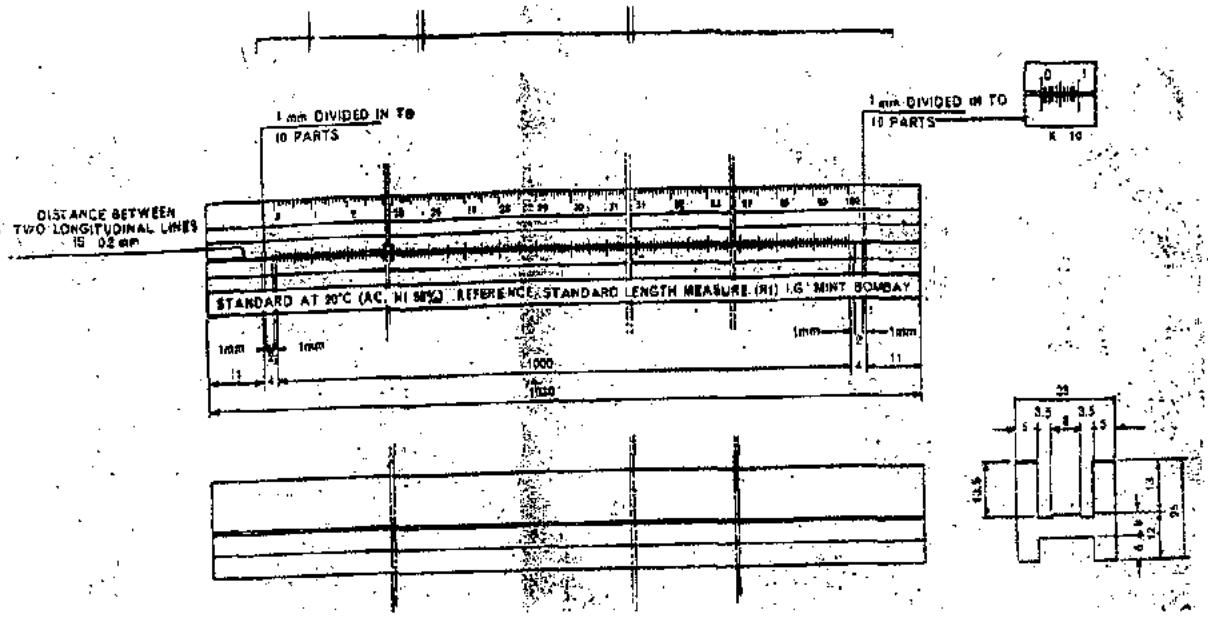

REFERENCE STANDARD METRE BAR

Figure-1

(c) The separation of the longitudinal setting lines shall be 0.2 mm and their width shall be in between 8 and 10 micrometres.

(d) Each longitudinal setting line shall be straight to within 30 micrometres.

(e) The longitudinal setting lines shall be parallel to each other to within 50 micrometres.

7. Maximum permissible error

(a) When the metre bar is supported on its marked Bessel points, the errors in length between any two graduation marks of the main scale at the temperature of 20°C, shall not exceed 0.010 mm.

(b) In the case of the fine scales, the error between any two 0.1 mm marks shall not exceed 0.005 mm.

8. Inscription

The metre bar shall bear the following inscription :

(a) the words "REFERENCE STANDARD METRE BAR",

(b) the identification number of the metre bar,

(c) the verification mark of the NPL, after the first calibration and marks of subsequent verification to be made on the plate of the carrying case of the metre bar,

(d) the name of the manufacturers,

(e) the material of the metre bar,

(f) the words, figures and letter "STANDARD AT 20°C",

(g) the year of manufacture.

9. Protective and carrying case

(a) The standard metre bar shall be housed in a case made from suitable material and provided with a handle, lined internally with velvet, a plastic material or any other material and in such a way that the metre bar is not likely to be damaged, particularly by shocks or corrosion.

(b) The case shall have affixed on it a plate bearing the inscription "REFERENCE STANDARD METRE BAR" and the identification number.

SECOND SCHEDULE

DENOMINATIONS, MATERIALS, SHAPE AND PERMISSIBLE ERRORS IN RESPECT OF SECONDARY STANDARDS

[See *Rule 4*

PART I-SECONDARY STANDARD WEIGHTS

1. Denominations

Kilogram series	*Gram series*	*Milligram series*
(1)	(2)	(3)
10	500	500
5	200	200
2	200	200
1	100	100
	50	50
	20	20
	20	20
	10	10
	5	5
	2	2
	2	2
	1	1

2. Materials

(a) Weights of 10 kg to 1 g shall be made from admiralty bronze (88 Cu, 10 Sn, 2 Zn), or nickel-chromium alloy (80 Ni, 20 Cr) or austenitic stainless steel (20 Ni, 25 Cr) or (25 Ni, 20 Cr).

(b) Weights of 500 mg to 50 mg shall be made from cupro-nickel (75 Cu, 25 Ni), or nickel chromium alloy (80 Ni, 20 Cr), or austenitic stainless steel (20 Ni, 25 Cr), or (25 Ni, 20 Cr).

(c) Weights of 20 mg to 1 mg shall be made of aluminium sheets. Copper, silicon and zinc contained as impurities in aluminium shall not exceed 0.3 per cent in the aggregate.

3. Shape and finish

(a) For kilogram and gram series—Integral cylindrical body with knob flattened at the top. Weights of 10 kilogram to 100 gram (both inclusive) shall have adjusting devices.

(b) For milligram series—the weights shall be in the form of square sheets, one of the corners being bent at right angle.

(c) The denominations shall be marked only on kilogram and gram series weights.

(d) The entire surface of the weights, including their base and corners shall be free from any roughness and the surface of the weights, when inspected visually, shall not show any porosity and shall have a mirror polish appearance.

4. Maximum permissible error

Denomination	*Permissible error ± mg*
10 kg	50
5 kg	25
2 kg	10
1 kg	5
500 g	2.5
200 g	1.0
100 g	0.5
50 g	0.30

(1)	(2)	(3)
20 g	0.25	
10 g	0.20	
5 g	0.15	
2 g	0.12	
1 g	0.10	
500 mg	0.08	
200 mg	0.06	
100 mg	0.05	
50 mg	0.04	
20 mg	0.03	
10 mg	0.02	
5 mg	0.02	
2 mg	0.02	
1 mg	0.02	

5. Protective and carrying case

(a) These weights shall be stored in their boxes made from teakwood or any other suitable non-corrosive material with proper housing lined with chemically neutral velvet, chamois leather or soft plastic material. Wood used in such boxes shall be reasonably free from resins and volatile materials. Glue shall not be used for fixing velvet or such other material. The weights shall be housed in such a manner so as to avoid their movement during transit.

(b) Each milligram weight shall be provided with a separate housing. A covering glass or a sheet of any other transparent, non-reactive and non-corrosive material shall be provided so as to ensure that these weights are not dislocated during transit.

(c) A suitable device for lifting the kilogram and gram weights, covered with chamois leather or other suitable material, shall be provided. A pair of forceps capable of lifting easily milligram weights shall also be provided.

6. Inscription

The boxes containing the weights shall have the following inscriptions:—

(a) the words 'SECONDARY STANDARD WEIGHTS',

(b) the identification number of the secondary standard weights,

(c) the name of the manufacturer,

(d) the material used for weights—

(i) kilogram & gram series

(ii) milligram series,

(e) the year of manufacture,

(f) the mark of verification.

PART II- SECONDARY STANDARD METRE BAR

1. Material

The secondary standard metre bar (hereafter called metre bar) shall be manufactured from 58 per cent nickel-steel.

2. Shape and dimensions

(a) The metre bar shall have a rectangular cross-section with dimensions 30mm x 15mm approximately.

(b) The top surface shall have two rectangular grooves along its length (as per Figure 2).

(c) The overall length of the measure shall be 1030 ±1 mm and the graduated length shall be 1010 mm.

(d) Ungraduated space of 10 mm shall be left after the last graduation mark.

3. Finish

The graduated surface shall be bright, highly polished and free from surface irregularities in the neighbourhood of the graduation mark.

4. Graduations

(a) The metre bar shall be graduated in millimetres throughout from 0 to 1000 mm.

(b) A length of 10 mm before the zero graduation mark shall also be graduated in millimetres.

(c) The scale shall be regular. The width of the graduation marks shall be between thirty and fifty micrometres.

(d) The width of the graduation marks shall be uniform to within ± ten per cent of the average width of all the marks.

(e) Each graduation marks shall be straight to within ten micrometres over its length.

(f) The graduation marks shall be parallel to one another to within ten micrometres.

(g) The graduation marks shall be square to the scale axis to within twenty minutes of arc.

(h) The graduation marks representing centimetres shall be longer than those representing half centimetres and the graduation marks representing half centimetres shall be longer than those representing millimetres.

(i) The length of the graduation marks shall be not less than:

2 mm for mm marks.

3 mm for half cm marks.

4 mm for cm marks.

These marks shall be disposed equally on either side of an imaginary centre line defined by the two setting lines.

474 G I/11 – 63

(j) There shall be two short longitudinal setting lines each of 5 mm in length which shall be drawn leaving a blank space of 2 mm, the one before the first and the other after the last graduation mark. The longitudinal lines shall be on a straight line which represent the imaginary central line and the departure from the central line shall be not more than 0.1 mm.

(k) When supported on the Bessel points or on a flat surface the graduated surface shall be flat to within 0.05 mm, i.e. all the points on the surface shall be between two parallel planes 0.05 mm apart.

5. *Auxiliary scale*

(a) Auxiliary scale shall be marked on one of the top edges of the metre bar.

(b) The auxiliary scale shall consist of centimetre and half centimetre marks corresponding to the marks of the main scale.

(c) The marks of the auxiliary scale shall be collinear (passing through the same vertical planes) with the graduations of main scale to within ± 0.1 mm.

(d) The width of the graduation marks shall be not more than one hundred micrometres.

(e) The graduation marks representing centimetres shall be longer than those representing half centimetres.

(f) The length of the graduation marks shall be not less than:

3 mm for cm marks, and

2 mm for half cm marks.

One of the ends of the marks shall lie on a straight line.

(g) The centimetre graduation marks shall be numbered in the increasing order of numeration.

(h) The height of the numerals and the letters shall be approximately 3 mm.

6. *Maximum permissible error*

The error on the length between any two graduation marks on the secondary standard metre bar, at the standard temperature of 20°C, shall not exceed the value "e" calculated according to the following formula:

$e = \pm (25 + L/40)$ micrometres

Where L is the nominal length in millimetres of that part of the metre bar between the two graduation marks, the error on which is being determined. The calculated value of "e" shall be rounded to the nearest integer.

7. *Inscription*

The metre bar shall bear the following inscriptions:

(a) the words "SECONDARY STANDARD METRE BAR",

(b) an identification number of the secondary standard metre bar,

(c) the name of the manufacturer,

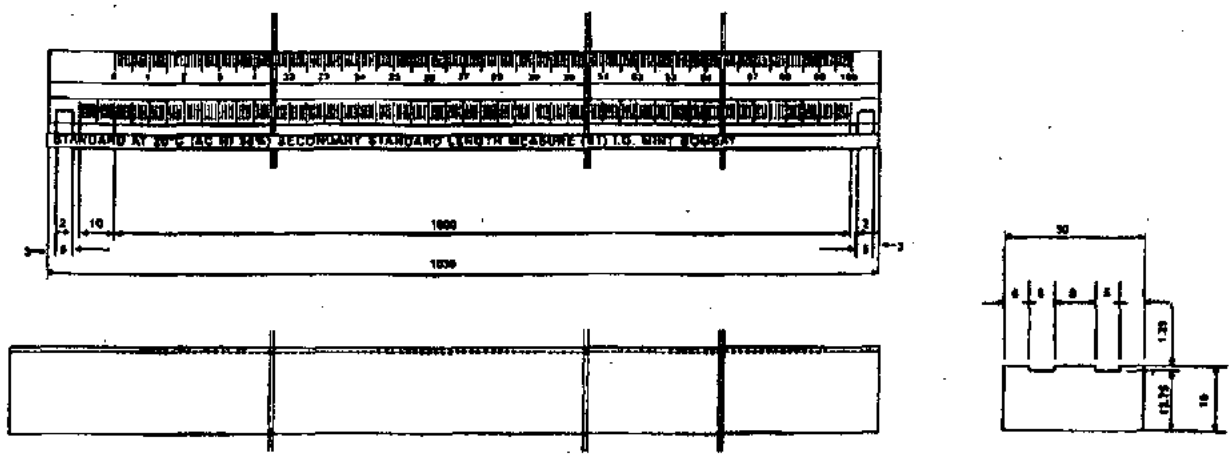

SECONDARY STANDARD METRE BAR
FIGURE - 2

(d) the material of the metre bar,
(e) the words, figures and letter "STANDARD AT 20°C",
(f) the year of manufacture,
(g) the mark of verification on the plate of the carrying case of the metre bar.

8. Protective and carrying case

(a) The metre bar shall be housed in a case made from suitable material and provided with a handle, lined internally with velvet, a plastic material or any other material, and in such a way that the measure is not likely to be damaged, particularly by shocks or corrosion.
(b) The case shall have affixed on it a plate bearing the inscription "SECONDARY STANDARD METRE BAR" and the identification number.

Note: The existing secondary standard metre bars may differ in minor details in regard to setting lines and inscriptions, etc.

PART III-SECONDARY STANDARD CAPACITY MEASURES

1. Denominations

Litre series (1)	*Millilitre series (ml)*
5	500
2	200
1	100
	50
	20

Note: 1 litre = 1 dm^3 = 0.001 m^3; 1 ml= 1 cm^3

2. Material

Secondary standard capacity measures shall be cast out of admiralty bronze of the same composition as is employed in the case of secondary standard weight.

3. Shape

(a) The secondary standard capacity measure of five litre shall be cylindrical and have its inside diameter equal to the height of the measure. This shall have two handles attached securely to its sides.
(b) The measure of 2 l and below shall be of the same shape as above but shall not have any handles.
(c) The denominations of the secondary standard capacity measures shall be engraved on the outside surface.
(d) Each secondary standard capacity measure shall be provided with a specially selected striking glass on the measures and glasses shall be securely packed in velvet lined teakwood boxes.

4. Maximum permissible error

Denomination	*Permissible error ± ml*
5 l	2
2 l	1
1 l	0.8
500 ml	0.5
200 ml	0.4
100 ml	0.3
50 ml	0.2
20 ml	0.1

5. Protective and carrying cases

These capacity measures shall be stored in their boxes made from teakwood or any other suitable non-corrosive material with proper housing lined with velvet, chamois leather or soft plastic material. Wood used in such boxes shall be reasonably free from resins and volatile materials. Glue may not be used for fixing velvet or such other materials. Each capacity measure shall be housed in such a manner so as to avoid their excessive movement during transit.

Each striking glass of the capacity measure shall be securely housed in proper grooves so as to protect them from breakage during transit.

6. Inscriptions

The boxes containing these capacity measures shall have the following inscriptions:—

(a) the inscription SECONDARY STANDARD CAPACITY MEASURES;
(b) the identification number of secondary standard capacity measures;
(c) the name of the manufacturer;
(d) the year of manufacture;
(e) the mark of verification of proper verification authority.

THIRD SCHEDULE

DENOMINATIONS, MATERIAL, SHAPE AND PERMISSIBLE ERRORS IN RESPECT OF WORKING STANDARDS

[See Rule 5]

PART I- WORKING STANDARD WEIGHTS

1. Denominations

Kilogram series	*Gram series*	*Milligram series*
(1)	(2)	(3)
20	500	500
10	200	200
10	200	200
5	100	100
2	50	50
2	20	20
1	10	10

(2)	(2)	(3)
	5	5
	2	2
	2	2
	1	1

2. Material

(a) Weights of 20 kg to 1 g shall be cast from admiralty bronze (88 Cu, 10 Sn, 2 Zn) or made from cupro-nickel (75 Cu, 25 Ni) or nickel chromium alloy (80 NI, 20 Cr) or austenitic stainless steel (25 NI, 20 Cr) or (20 Ni, 25 Cr).

(b) Weights of 500 mg to 100 mg shall be made from admiralty bronze (rolled) (88 Cu, 10 Zn, 2 Sn) sheets or from the sheets of nickel chromium alloy (80 Ni 20 Cr) or austenitic stainless steel (25 Ni, 20 Cr) or (20 Ni, 25 Cr).

(c) Weights of 50 mg to 1 mg shall be made of aluminium sheets. Copper, silicon and iron contained as impurities in the aluminium shall not exceed 0.3 per cent in the aggregate.

3. Shape and finish

(a) Weights of 20 kg and 10 kg shall be cylindrical in shape and shall be cast in two parts, the top part being screwed snugly into the bottom part. The top part shall be cast in the form of a handle for lifting purposes. The two parts after assembly shall be locked by means of a set screw over which the seal of the verifying authority shall be affixed.

(b) Weights of 5 kg to 200 gm (inclusive) shall be cast in two parts, the top part being screwed snugly into the bottom part. The top part shall be cast in the form of a knob for lifting purposes. The two parts, after assembly, shall be locked by means of a set screw, over which the seal of the verifying authority shall be affixed.

(c) Weights of 100 g to 10 g (inclusive) shall be as in (b) above except that there shall be no locking arrangement.

(d) Weights of 5 g to 1 g (inclusive) shall be integral weights with knob.

(e) Weights of 500 mg to 1 mg (inclusive) shall be of square shape with the one of the sides bent at right angles to the flat surface for ease of handling.

(f) The denominations shall be marked on the weights.

(g) The entire surface of the weights, including their base and corners shall be free from roughness.

The surface of the weights, when inspected visually, shall not show any porosity and shall have a mirror polish appearance.

4. Maximum permissible error

The permissible errors in excess and in deficiency shall be as follows:—

Denomination	*Permissible error ± mg*
20 kg	300
10 kg	150
5 kg	75
2 kg	30
1 kg	15
500 g	7.5
200 g	3.0
100 g	1.5
50 g	1.0
20 g	0.8
10 g	0.6
5 g	0.6
2 g	0.4
1 g	0.3
500 mg	0.25
200 mg	0.20
100 mg	0.15
50 mg	0.12
20 mg	0.10
10 mg	0.08
5 mg	0.06
2 mg	0.06
1 mg	0.06

5. Protective and carrying case

(a) These weights shall be stored in their boxes made from teakwood or any other suitable non-corrosive material with proper housing lined with chemically neutral velvet, chamois leather or soft plastic material. Wood used in such boxes shall be reasonably free from resins and volatile materials. Glue shall not be used for fixing velvet or such other material. The weights shall be housed in such a manner so as to avoid their movement during transit.

(b) Each milligram weight shall be provided with a separate housing. A covering glass or a sheet of any other transparent, non-reactive

and non-corrosive material shall be provided so as to ensure that these weights are not dislocated during transit.

(c) A suitable device for lifting the kilogram and gram weights, covered with chamois leather or other suitable material, shall be provided. A pair of forceps capable of lifting easily milligram weights shall also be provided.

6. Inscription

The boxes containing the weights shall have the following inscriptions :—

(a) the words 'WORKING STANDARD WEIGHTS',

(b) the identification number of the working standard weights,

(c) the name of the manufacturer,

(d) the year of manufacture,

(e) the marks of verification.

PART II- WORKING STANDARD METRE BAR

1. Material

The working standard metre bar (hereinafter called metre bar) shall be manufactured from 58 per cent nickel-steel, or austenitic stainless steel, or stainless steel with 13 per cent chromium or pure nickel (minimum purity 99 per cent).

2. Shape and dimensions

(a) The metre bar shall have a rectangular cross section of minimum dimensions 20 mm x 10 mm. The existing cross-section with dimensions 30 mm x 15 mm shall be preferred.

(b) The overall length of the metre bar shall be 1030 ± 1 mm and the graduated length shall be 1010 mm.

(c) Ungraduated length of 10 mm shall be left after the last graduated marks.

3. Finish

The graduated surface shall be bright, nicely polished and free from surface irregularities in the neighbourhood of the graduation marks.

4. Graduations

(a) The metre bar shall be graduated in millimetre throughout from 0 to 1000 mm on the wider upper surface.

(b) A length of 10 mm before the zero graduation mark shall also be graduated in millimetres.

(c) The scale shall be regular. The thickness of the graduation marks shall be uniform and shall lie between 30 and 80 micrometres.

(d) The width of the graduation marks shall be uniform to within ± fifteen per cent of the average width of all the marks.

(e) The graduation marks representing centimetres shall be longer than those representing half centimetres and the graduation marks representing half centimetres shall be longer than those representing millimetres.

(f) Each graduation mark shall be straight to within ten micrometres over its length.

(g) The graduation marks shall be parallel to one another to within ten micrometres.

(h) The length of the graduation marks shall be not less than—

3 mm for mm marks.

5 mm for half cm marks.

8 mm for cm marks.

(i) The centimetres graduation marks shall be numbered in the increasing order of numeration.

(j) The height of the numerals and the letters (symbols) shall be approximately 3 mm.

(k) The graduation marks shall be square to the scale axis to within 30 minutes of arc.

5. Cursor

(a) The errors on the length measure under verification shall be determined by means of a scale marked on a plate, made from transparent material, which is carried by a cursor capable of moving along the length of the metre bar. The plate shall have appropriate and constant dimensions and thickness.

(b) The scale on the plate shall :

(i) either be a length of 9 mm divided into 10 parts thus forming a Vernier scale to read the errors to the nearest of 0.1 mm; or

(ii) one millimetre divided into 10 parts for reading the errors directly to the nearest of 0.1 mm.

(c) The thickness of the graduation marks on the scale shall be less than that of the graduation marks on the metre bar.

(d) The graduation marks on the scale shall be inscribed on the surface facing the graduation marks on the metre bar.

(e) The readings shall be taken by means of a magnifying glass, the magnification of which shall be not less than 5X if the scale is graduated in 0.1 mm and not less than 3X if the scale is of Vernier type.

474 GI/11-84

(f) The cursor shall be such that it would be possible to move it smoothly without jerks, along a straight line from one end of the measure to the other.

(g) A mechanism to raise, lower and laterally move the measure under verification, within a view to putting its graduated surface at a proper level and aligning its zero mark with that of the metre bar shall be provided.

(h) For facilitating the verification of end measures, two vertical stops bearing reference lines shall be provided. The first stop shall be such that its reference line can be aligned with the zero mark of the metre bar. The second stop shall be capable of moving along the entire length of the metre bar.

6. Maximum permissible errors

(a) The error on the length between any two graduation marks on the working standard length measure, at the standard temperature of 20°C, shall not exceed the value "e" calculated according to the following formula :

$$e = (50+L/20) \text{ micrometres}$$

where L is the nominal length in millimetres of that part of the metre bar between the two graduation marks, the error on which is being determined. The calculated value of "e" shall be rounded to the nearest integer.

(b) The errors on the length between any two graduation lines on the plate shall not exceed ± 20 micrometres.

7. Inscription

The metre bar shall bear the following inscription:

(a) the words "WORKING STANDARD METRE BAR",

(b) identification number of the metre bar,

(c) the name of the manufacturer,

(d) the material of the metre bar,

(e) the words, figures and letter "STANDARD AT 20°C",

(f) the year of manufacture.

8. Protective and carrying case

(a) The standard metre bar shall be housed in a case made from suitable material and provided with a handle, lined internally with velvet, a plastic material or any other material and in such a way that the metre bar is not likely to be damaged, particularly by shocks or corrosion.

(b) The case shall have affixed on it a plate bearing the inscription "WORKING STANDARD METRE BAR" and the identification number.

Note : The existing working standard length measure (metre bars) may differ in minor details in regard to inscriptions, etc. on it.

PART III—WORKING STANDARD CAPACITY MEASURES

1. Denomination

Litre series (l)	Millilitre series (ml)
10	500
5	200
2	100
1	50
	20

2. Material

Working standard capacity measures shall be pressed out of oxygen free, deoxidized annealed copper sheets of deep drawing quality.

3. Shape

(a) Working standard capacity measure of 10 litres shall be cylindrical and have its inside diameter approximately equal to the height of the measure. This shall have two handles attached securely to its sides.

(b) Working standard capacity measures of 5 litres and below shall be of the same shape as above but shall not have any handles.

(c) The outside of the body of the working standard capacity measures shall be oxidized to give a smooth dull black surface and the inside shall be tinned.

(d) The denominations of the working standard measures shall be engraved on the outside surface.

(e) Each working standard capacity measure shall be provided with specially selected striking glass and the measures and glasses shall be securely packed in velvet lined teakwood boxes.

4. Maximum permissible error

Denomination	*Permissible error in ml ± ml*
10 litres	8
5 litres	4
2 litres	2
1 litre	1.5
500 ml	1.0
200 ml	0.8
100 ml	0.6
50 ml	0.4
20 ml	0.2

5. Pipette measures

Pipettes of the following description may also be used as working standard measures :

(a) One mark pipettes of capacities 10 ml and 5 ml.

(b) Graduated pipettes of capacities 5 ml graduated at every tenth of ml.

6. Delivery time and maximum permissible errors of pipette measures

Denomination ml	Delivery time in seconds		Permissible error (+ ml)
	Minimum	Maximum	
10	15	25	0.04
5	10	20	0.03
5 (Graduated)	10	40	0.05

7. Protective and carrying cases

These capacity measures shall be stored in their boxes made from teakwood or any other suitable non-corrosive material with proper housing lined with velvet, chamois leather or soft plastic material. Wood used in such boxes shall be reasonably free from resins and volatile materials. Glue may not be used for fixing velvet or such other materials. Each capacity measure shall be housed in such a manner so as to avoid their excessive movement during transit.

Each striking glass of the capacity measure shall be securely housed in proper grooves so as to protect them from breakage during transit.

8. Inscriptions

The boxes containing these capacity measures shall have the following inscriptions :

(a) the words "WORKING STANDARD CAPACITY MEASURES",

(b) the identification number of the capacity measures,

(c) the name of the manufacturer,

(d) the year of manufacture,

(e) the mark(s) of verification of proper verification authority.

FOURTH SCHEDULE

SPECIFICATIONS FOR STANDARD EQUIPMENT

[See Rules 7, 8 and 9]

PART I—REFERENCE STANDARD BALANCES

1. Every reference standard balance shall be of such robust construction and have such metrological qualities so as to ensure the continued good performance, as indicated in paragraph 2.

2. Sensitivity figure/readability and precision of measurement of every reference standard balance shall be such as to give overall precision of measurement of 1 part in one million for weights from 10 kg to 10 g and $\pm$ 0.01 mg for weights from 5 g to 1 mg.

PART II—SECONDARY STANDARD BALANCES

1. Every secondary standard balance shall conform as regards capacity, sensitivity figure in mg per division, minimum scale division, variation in sensitivity figure with respect to load and overall accuracy of measurement, to the specifications as indicated below :

Capacity	Sensitivity figure mg/div.	Min. scale division	Maximum variation in sensitivity figure with respect to load	Minimum overall accuracy of measurement
1	2	3	4	5
20 kg	25	1.5 mm	10 per cent	25 mg in 10 kg
5 kg	7.5	1.0 mm	10 per cent	7.5 mg in 2 kg
1 kg	1.5	1.0 mm	10 per cent	1.5 mg in 500 g
200 g	0.5	1.0 mm	10 per cent	0.5 mg in 50 g
20 g	0.1	1.0 mm	10 per cent	0.01 mg in 1 mg
2 g	0.02	0.75 mm	10 per cent	0.02 mg in 1 mg

2. the standard deviation of the 10 consecutive rest points for every secondary standard balance shall not be more than one scale division.

3. The deviation in arm ratio from unity, for every secondary standard equi-arm balance shall not be more than a fraction equal to sensitivity figure divided by full load (both being taken in the same unit).

4. The variation in time periods at different loads for every secondary standard balance shall not be more than 20 per cent.

5. Every secondary standard balance shall be provided with a device so that the contact between the knife-edges and their respective planes is broken when the balance is in arrested position.

6. The secondary standard balance shall, ordinarily, be used for indoor work in laboratories.

7. Every secondary standard balance of digital type shall conform as regards value of verification scale interval as given below:—

Capacity	Maximum value of verification scale interval	Type of weights to be verified
20 kg	1 mg	20 kg to 500 g
200 g	0.01 mg	200 g to 1 mg

PART III- WORKING STANDARD BALANCES

1. Working standard balances may be of the following two types:—

(a) Equi-arm types balances;

(b) Digital type balances.

2. Every working standard balance of equi-arm type shall conform, as regards capacity, sensitivity figure, maximum variation in sensitivity figure with respect to load and maximum overall inaccuracy of measurement to the specification as indicated below—

Capacity	*Max. Sensitivity figure/division*	*Maximum variation in sensitivity figure*	*Minimum overall accuracy of measurement*
50 kg	100 mg	20 per cent	100 mg in 10 kg
5 kg	10 mg	20 per cent	10 mg in 500 g
200 g	1 mg	20 per cent	1 mg in 100 g
50 g	0.4 mg	20 per cent	0.4 mg in 5 g
2 g	0.05 mg	20 per cent	0.05 mg in 1 mg

2.1 The standard deviation of ten consecutive rest points for every working standard balance shall not be more than one scale division.

2.2 The deviation in arm ratio from unity, for every working standard equi-arm balance shall not be more than the fraction equal to sensitivity figure divided by the full load (both being taken in the same unit).

3. Every working standard digital type balance shall conform, as regards value of verification scale interval as given below:—

Capacity	Max. value of verification scale interval	Type of weights to be verified
50 kg	1 g	Non-bullion : 50 kg and 20 kg
20 kg	0.1 g	Bullion : 10 kg, 5 kg; Non-bullion : 20 kg to 2 kg
2 kg	10 mg	Bullion : 2 kg to 500 g; Non-bullion : 2 kg to 200 g
200 g	0.1 mg	Bullion : 200 g and below; Non-bullion : 200 g and below

4. The standard deviation of the 10 consecutive rest points for every working standard balance shall not be more than one scale division.

5. The deviation in arm ratio from unity, for every working standard equi-arm balance shall not be more than a fraction equal to sensitivity figure divided by full load (both being taken in the same unit).

6. The variation in time periods at different load for every working standard balance shall not be more than 20 per cent.

7. Every indoor type working standard balance shall be provided with a device so that the contact between the knife-edges and their respective planes is broken when the balance is in arrested position.

Note: For verification of bullion or carat weights, only indoor type working standard balances shall be used.

FIFTH SCHEDULE

[See Rule 11]

PART—I

Weights (Other than Carat Weights)

General

This Part deals with the following categories of weights:—

(A) Iron weights, parallelopiped (50 kg to 5 kg)
(B) Cylindrical knob type weights (10 kg to 1g)
(C) Iron weights, hexagonal (50 kg to 50 g)
(D) Bullion weights (10 kg to 1 g) and
(E) Sheet metal weights (500 mg to 1 mg)

A.—IRON WEIGHTS PARALLELOPIPED (50 kg to 5 kg)

1. Denominations

Parallelopiped iron weights shall have the following denominations:—

Kilogram series : 50, 20, 10 and 5.

2. Shape

(a) The weights shall be integral and in the form of parallelopiped rectangles with corners rounded off and having a rigid handle for ease of handling.

(b) The shapes shall be as shown either in Figure 3 or in Figure 4.

3. Material

(a) Body: The body shall be made or manufactured from grey cast iron.

(b) Handles: Handles shall be made or manufactured from the following materials:

(i) Type 1 weights—Steel tube without soldering

(ii) Type 2 weights—Cast along with the body

(c) Method of manufacture:

The weights shall be made or manufactured by means of any suitable foundry and moulding process.

4. Loading holes

(a) The weights shall be provided with loading holes of either Type 1 or Type 2 indicated below:

Type 1 loading hole

(i) The loading hole shall be located within the tube which forms the handle (See Figure 3).

(ii) The loading hole shall be closed either with a screwed brass plug or a brass disc. The screwed brass plug shall be provided with a screw driver slot and the brass disc shall have a central hole to facilitate lifting.

(iii) The plug or a disc shall be sealed by means of a lead pellet pressed firmly into an internal circular slot or in the threaded part of the tube.

Type 2 loading hole

(i) The loading hole shall be cast in one of the upper surfaces of the weights and shall open out on the upper surface (See Figure 4).

(ii) This loading hole shall be closed by a plate cut from mild steel.

(iii) The mild steel plate shall be closed by a lead pellet pressed firmly into the conical hole.

(b) In case of new weights, about two-third of the depth of the loading hole shall remain empty after adjustment.

5. Markings

(a) The denomination of the weight and the marker's or manufacturer's name or trade mark shall be indicated indelibly in the sunken form or in relief, on the upper surface of the central portion of the weight. (See Figure 3 and Figure 4.)

(b) The denomination of the weight shall be indicated in the international form of Indian numerals in an indelible manner with the symbols as illustrated below:

किलो or किग्रा 5 kg

Note: The abbreviation किलो or किग्रा, may be indicated in the regional script.

6. Dimensions

(a) The dimensions of the two types of weight shall be as specified in Tables 1 and 2.

(b) The tolerances on dimensions shall be ± 5 per cent.

TABLE 1

Parallelopiped Weights Dimensions for Type 1 Weights

(*In millimetres*)

Denomination	*A*	*A'*	*B*	*B'*	*H*	*C*	*D*	*E*	*F*	*G/G'*
5 kg	150	152	75	77	84	36	30	6	66	12/20
10 kg	190	193	95	97	109	46	38	8	84	12/20
20 kg	230	234	115	117	139	61	52	12	109	24/32
50 kg	310	314	155	157	192	83	74	16	152	24/32

4746/11-85

Denomination	*I*	*J*	*K*	*T*	*L*	*N*	*O*	*U*	*V*	*W*	*P*
5 kg	145	5	12	M16 x 1.5	14	1	2	16.5	18	16	5
10 kg	185	6	16	M16 x 1.5	14	1	2	16.5	18	16	5
20 kg	220	8	20	M27 x 1.5	21	2	3	27.5	30	27	8
50 kg	300	10	25	M27 x 1.5	21	2	3	27.5	30	27	8

Sides A and A' as also B and B' may be inversed.

TABLE 2

Parallelopiped Weights Dimensions for Type 2 Weights.

(*In millimetres*)

Denomination	*A*	*A'*	*B*	*B'*	*H*	*C*	*D*	*E*	*F*	*G*	*J*	*K*	*M*	*N*	*P*
5 kg	150	152	75	77	84	36	30	6	66	19	5	12	16	13	55
10 kg	190	193	95	97	109	46	38	8	84	25	6	16	35	25	70
20 kg	230	234	115	117	139	61	52	12	109	29	8	20	50	30	95
50 kg	310	314	155	157	192	83	74	16	152	40	10	25	70	40	148

Sides A and A' also B and B' may be inversed.

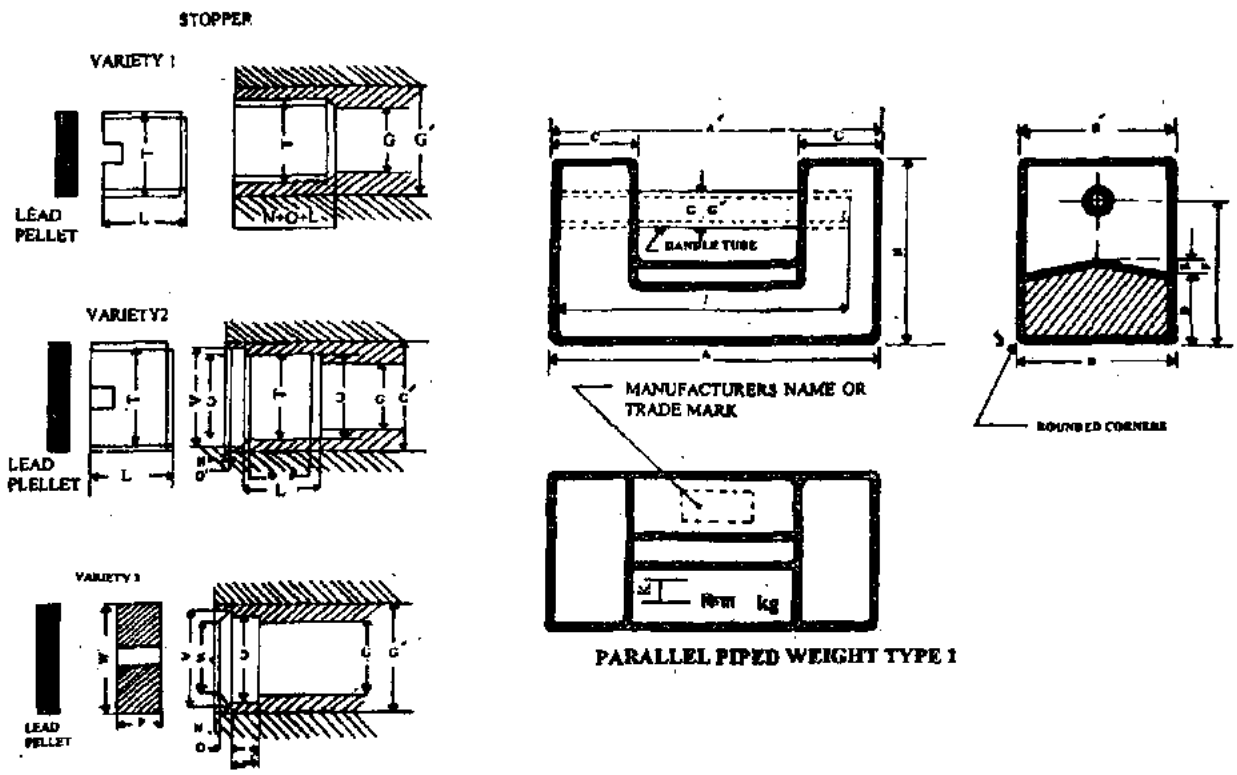

Figure 3

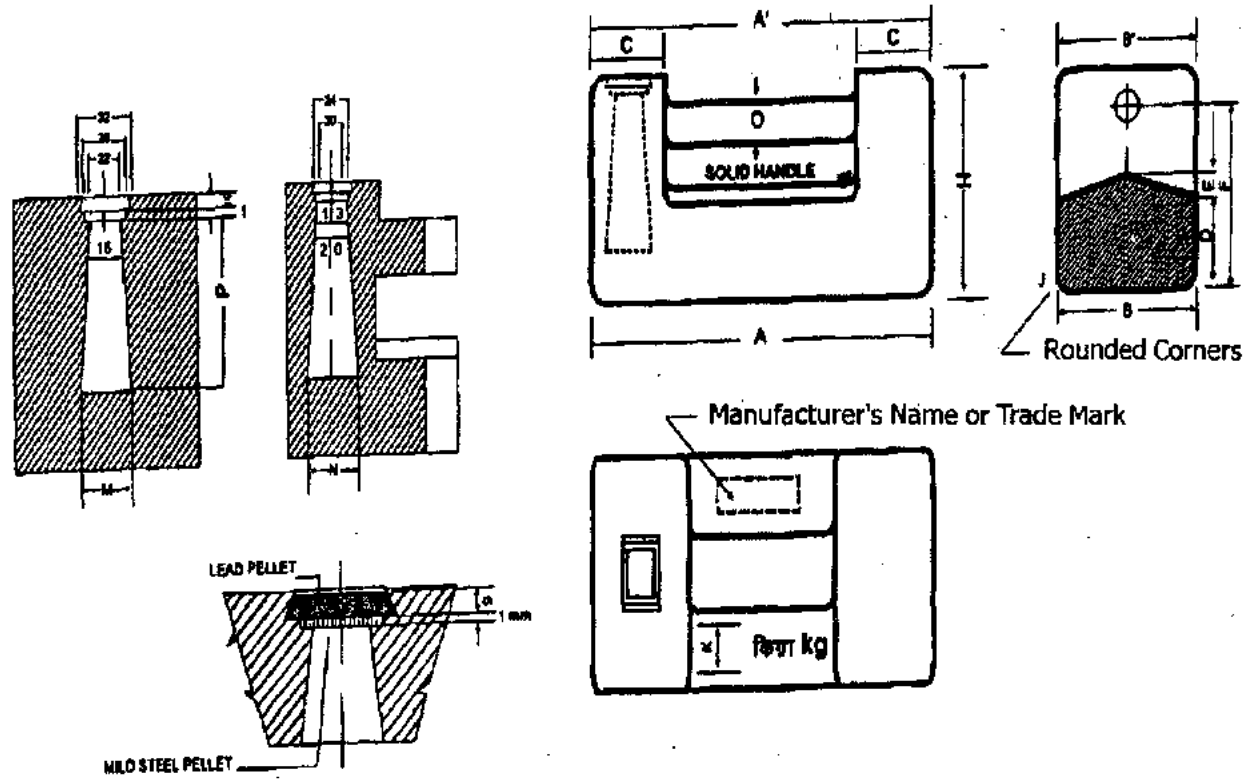

Parallelopiped Weight Type 2

Figure 4

7. Finish

The weights shall be finished smooth and be free from dross, pits, blow-holes and other defects. They shall be protected against corrosion by applying an appropriate coating which is resistant to normal usage and wear and tear.

8. Permissible error

The maximum permissible errors shall be as specified below :

Denomination	*Permissible error*	
	Verification (mg)	*Inspection (mg)*
50 kg	7500	± 7500
20 kg	3000	± 3000
10 kg	1500	± 1500
5 kg	750	± 750

9. Stamping

The Legal Metrology Officer's seals shall be stamped on the lead pellet within the loading hole. (See Figure 3 & Figure 4).

B.—CYLINDRICAL KNOB TYPE WEIGHTS (10 kg to 1 g)

1. Denominations

Cylindrical weights shall have the following denominations :

Gram series: 500, 200, 100, 50, 20, 10, 5, 2 and 1

Kilogram series : 10, 5, 2 and 1

2. Shape

(a) The weights shall be integral and cylindrical in shape and provided with a flattened knob for ease of handling.

(b) The shapes shall be as shown in Figure (5).

3. Material

The weights shall be made or manufactured from brass, gun metal or bronze; grey cast iron may also be used for weights from 10 kg to 200 g but grey cast iron weights shall not be used for weighment of gold, silver, precious metals or their products.

4. Method of manufacture

The weights shall be made or manufactured by any suitable method as may be applicable to the selected material.

5. Loading hole

(a) Weights of denominations 10 g to 1 g both inclusive, shall be solid, integral weights without a loading hole.

(b) Weights of denominations 10 kg to 20 g both inclusive, shall be provided with a loading hole.

(c) The loading hole shall be cylindrical and shall pass through the axis of the weight open out on the upper surface of the knob and have wider diameter at its upper end as shown in Figure 5.

(d) The loading hole shall be closed either by means of a threaded brass plug or a flat brass disc. (See Figure 5).

Note : The thread used shall be that commonly known as 'ISO Metric'.

(i) The threaded plug shall have a slot for adjusting it by means of a screw driver.

(ii) The flat disc. shall be provided with a suitable hole in the centre to facilitate handling.

(e) The plug or the flat disc shall be closed by means a lead pellet pressed firmly into the circular groove in the wider part of the loading hole.

(f) Weights without a loading hole shall be adjusted by machining or grinding.

(g) Weights with loading hole shall be adjusted with heavy metallic materials such as lead shots.

(h) In the case of new weights about two-thirds of the depth of the loading hole shall remain empty after adjustment.

6. Marking

(a) The denomination of the weight and the maker's or manufacturer's name or trade mark shall be indicated indelibly, in the sunken form or in relief, on the flat knob. (See Figure 5).

(b) The denomination of weights of 10 kilograms to 500 grams may also be indicated on the cylindrical body of the weight, provided that the numerals and letters of the symbol shall be larger than those used for indicating them on the knob.

(c) The denomination of the weight shall be indicated in the international form of Indian numerals in an indelible manner with the symbols as illustrated below :

किलो or किग्रा 5 kg

ग्रा or ग्राम 100 g

Note : The abbreviation किलो, किग्रा, ग्रा or ग्राम may be indicated in the regional script.

7. Dimensions

(a) The dimensions of cylindrical weights shall be as specified in Tables 3 and 4.

(b) The tolerances on dimensions shall be :

(i) for weights 1 kg. and below ± 10 per cent;

(ii) for weights above 1 kg ± 5 per cent.

TABLE 3

Cylindrical Knob Type Weights—Dimension for Weights in mm.

Denomination	*U*	*V*	*W*	*H*	*Y*	*R*	*J*	*K*	
10 kg	100	90	58	*According*	17	15	3	10	
5 kg	80	72	46	*to*	13	12	2	10	
2 kg	60	54	36	*material*	10	9	2	5	
1 kg	48	43	27		8	7	2	5	
500 g	38	34	22		6	5.5	1.5	3.2	
200 g	28	25	16		4.5	4	1.5	3.2	
100 g	22	20	13		4	3.5	1	2	
50 g	18	16	10		3	2.5	1	2	
20 g	13	11.5	7.5		2	1.8	0.5	1.5	
10 g	10	9	6		1.6	1.5	0.5	1	Without
5 g	8	7	4.5		1.4	1.25	0.5	1	loading
2 g	6	5.5	3		1	0.9	0.5	1	hole
1 g	6	5.5	3		1	0.9	0.5	1	

TABLE 4

Cylindrical Knob Type Weights--Dimension for Loading Hole Variety I and II in mm.

Denominations	*A*	*B*	*C*	*D*	*E*	*F*	*G*	*L*	*T*	*I*	*M*	*N*	*P*	*S*
20 g	3	18	5.5	2.5	6.5	1.5	1	9	M4 x 0.5	5	1	5	5	1
50 g	4.5	25	7.5	3.5	9	2	1	10	M6 x 0.5	5	1.5	7	7	1.5
100 g	4.5	30	7.5	3.5	9	2	1	10	M6 x 0.5	5	1.5	7	7	1.5
200 g	7	40	10.5	4.5	12	2.5	1.5	15	M8 x 1	8	2	10	10	2
500 g	7	50	10.5	4.5	12	2.5	1.5	15	M8 x 1	8	2	10	10	2
1 kg	12	65	18.5	7	20	4	2.5	20	M14 x 1.5	13	3	18	18	3
2 kg	12	80	18.5	7	20	4	2.5	20	M14 x 1.5	13	3	18	18	3
5 kg	18	120	24.5	8	26.5	4	2.5	35	M20 x 1.5	18	4	24	24	3
10 kg	18	160	24.5	8	26.5	4	2.5	35	M20 x 1.5	18	4	24	24	3

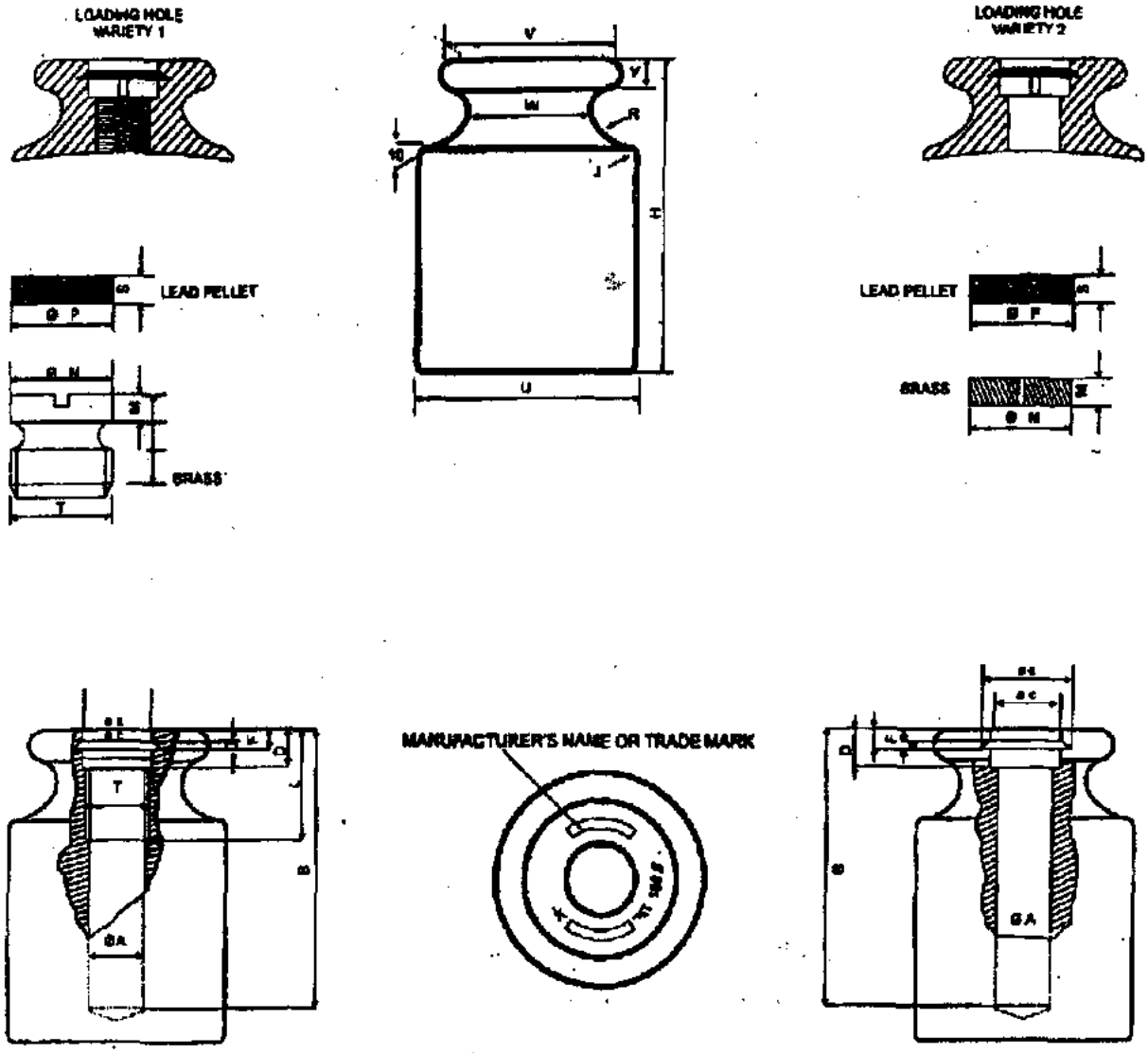

CYLINDRICAL KNOB TYPE WEIGHTS
FIGURE - 8

474 GI/11-86

8. Finish

The weights shall be polished smooth. They may be protected against corrosion by applying an appropriate coating which is resistant to normal usage and wear and tear.

9. Permissible error

The maximum permissible errors shall be as specified below :

Denomination	*Permissible error*	
	Verification (mg)	*Inspection (mg)*
10 kg	1500	± 1500
5 kg	750	± 750
2 kg	300	± 300
1 kg	150	± 150
500 g	75	± 75
200 g	30	± 30
100 g	15	± 15
50 g	10	± 10
20 g	8	± 8
10 g	6	± 6
5 g	5	± 5
2 g	4	± 4
1 g	3	± 3

10. Stamping

(a) The Legal Metrology Officer's seals shall be stamped on the load pellet within the loading hole, where loading hole is provided.

(b) The Legal Metrology Officer's seals shall be stamped on the bottom of weights which have no loading hole.

C.—IRON WEIGHTS, HEXAGONAL (50 kg to 50 g)

1. Denominations

Hexagonal iron weights shall have the following denominations :

Gram series : 500, 200, 100 and 50.

Kilogram series : 50, 20, 10, 5, 2 and 1.

2. Shape

(a) The weights shall be integral and hexagonal. The shape shall be as shown in Figures 6 and 6A.

(b) The weights of denominations of 50 kg and down to and including 5 kg shall be provided with cast-in handles made of mild steel.

(c) The weights of denominations 2 kg and down to and including 50 g shall nest with each other.

3. Material

The weights shall be made or manufactured from grey cast iron.

4. Method of manufacture

The weights shall be made or manufactured by means of any suitable foundry and moulding process.

5. Loading hole

The weights must have a loading hole formed at the foundry

(a) For weights in Figure 6, this hole must be in the shape of a right circular cone located axially and opening into the bottom face of the weight with its smaller diameter.

(b) For weights in Figure 6A, this hole must be in the shape of a frustum of a pyramid with rectangular base and opening into the bottom face of the weight with its smaller end.

(c) In the case of new weights about two-thirds of the depth of the loading hole shall remain empty after adjustment.

6. Marking

(a) The denomination of the weights and the maker's or manufacturer's name or trade mark shall be indicated indelibly in the sunken form or in relief, on the upper surface of the central portion of the weight (See Figure 6).

(b) The denomination of the weight shall be indicated in the international form of Indian numerals in indelible manner with the symbols as illustrated below (See Figure 6).

किलो or किग्रा 2 kg

ग्रा or ग्राम 200 g

Note : The abbreviation किलो, किग्रा, ग्रा or ग्राम may be indicated in the regional script.

7. Dimensions

(a) The dimensions shall be as specified in Tables 5 and 5A.

(b) The tolerances on dimensions shall be :

(i) for weights 1 kg and below ± 10 per cent

(ii) For weights above 1 kg ± 5 per cent.

TABLE 5

Dimensions for Cast Iron or Forged Mild Steel S Weights

(All dimensions in millimetres)

Denomination	*A*	*B*	*C*	*D*	*H*	*P*	*Q*	*R*	*S*	*T*
2 kg	94	101	78	41	10	34	30	9	18	4
1 kg	73	79	62	34	8	32	28	8	16	4
500 g	57	62	47	27	6	23	20	6	13	3
200 g	42	48	38	21	6	22	20	4	9	3
100 g	33	38	31	17	5	18	16	3	7	2.5
50 g	27	31	24	12	3	16	14	3	5	2

TABLE 5A

Dimensions of Cast Iron Weights with Cast-in Handles

(Dimensions in mm)

Denomination	*A*	*B*	*C*	*D*	*E*	*G*	*P*	*Q*	*R*	*S*	*T*
50 kg	236	253	134	170	100	27	58	48	24	102	32
20 kg	188	200	112	113	90	21	44	38	19	66	22
10 kg	152	161	92	88	74	18	36	30	15	54	19
5 kg	125	132	75	65	62	15	29	25	12	40	16

8. Finish

The weight shall be finished smooth and be free from pits, blow-holes and other defects. They shall be protected against corrosion by applying an appropriate coating which is resistant to normal usage of wear and tear.

9. Permissible error

The maximum permissible errors shall be as specified below :

Denomination	*Permissible error*	
	Verification (mg)	*Inspection (mg)*
50 kg	7500	± 7500
20 kg	3000	± 3000
10 kg	1500	± 1500
5 kg	750	± 750
2 kg	300	± 300
1 kg	150	± 150
500 g	75	±75
200 g	30	± 30
100 g	15	± 15
50 g	10	± 10

10. Stamping

The Legal Metrology Officer's seals shall be stamped on the lead pellet within the loading hole (See Figure 6).

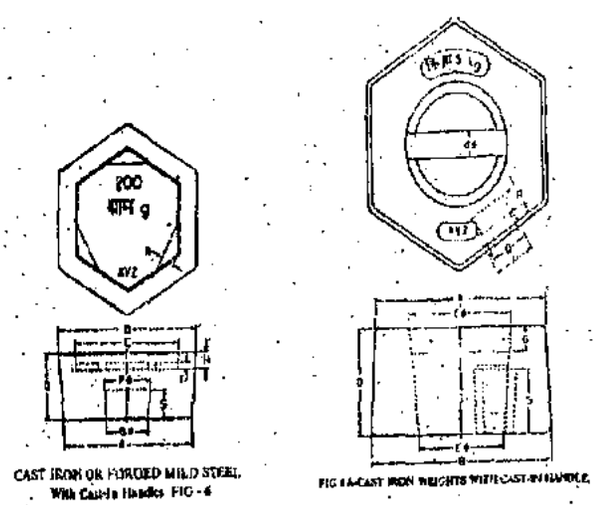

CAST IRON OR FORGED MILD STEEL With Cast-in Handles FIG - 6

FIG 6A-CAST IRON WEIGHTS WITH CAST-IN HANDLE

D.—BULLION WEIGHTS (10 kg to 1 g)

1. Denominations

Bullion weights shall have the following denominations :

Gram series : 500, 200, 100, 50, 20, 10, 5, 2 and 1.

Kilogram series : 10, 5, 2 and 1.

2. Shape

Bullion weights shall be of the following two types :

(i) Cylindrical knob types—Cylindrical knob type weights of denomination 10 kg to 1 g, both inclusive, shall be of the shape as specified in paragraph B-2 of this Part (See also Figure 5) but shall bear indications, specified in paragraph 6 to indicate that they are bullion weights.

(ii) Flat cylindrical type—Flat cylindrical type weights of denominations 1 kg to 1 g both inclusive, shall be flat cylindrical in shape, without a knob and shall nest with each other (See Figure 7).

3. Material

Weights shall be made or manufactured from brass, gun metal, bronze or the like.

4. Method of manufacture

Weights shall be either cast, pressed or turned from rods, or made or manufactured by any other suitable method as may be applicable to the selected material.

5. Loading holes

(a) Weights of denominations 10 kg to 20 g, both inclusive, made or manufactured according to requirements specified in paragraph 11 of this Part, shall have loading holes of the type specified for them.

(b) Weights of denominations 10 g to 1 g, both inclusive of either type shall be solid integral weights without a loading hole.

(c) Flat cylindrical weights from 1 kg to 20 g both inclusive, shall have loading holes, in the shape of a right circular frustum of a cone located axially and opening into the bottom face of the weight with its smaller diameter (See Figure 7).

(d) In the case of new weights about two-thirds of the depth of the loading hole shall remain empty after adjustment.

6. Markings

(a) The denominations and other marking on cylindrical knob type weights shall be as specified in paragraph 15 of this Part.

(b) Cylindrical knob type weights of denomination 100g to 1g, both inclusive, shall be marked on the body with a 'diamond' and those of denominations 10 kg to 200g, both inclusive, shall be marked on the knob with the words 'Bullion' and (बुलियन) within a 'diamond'.

(c) The denominations of flat cylindrical weights and the maker's or manufacturer's name or trade mark shall be indicated indelibly, in the sunken form or in relief, on the upper surface of the central portion of the weights (See Figure 7).

(d) Flat cylindrical weights of denominations 10 g to 1 g, both inclusive, shall be marked with only a 'diamond' and those of denominations 1 kg to 20 g, both inclusive, shall be marked with the words 'Bullion' and (बुलियन) within a 'diamond'.

(e) The denomination of the weight shall be indicated in the international form of Indian numerals in an indelible manner with the symbols as illustrated below (See Figure 7):

किलो or किग्रा 2 kg

ग्रा or ग्राम 10 g

TABLE 6

DIMENSIONS FOR FLAT CYLINDRICAL BULLION WEIGHTS

(All dimensions in millimetres)

Denomination	*A*	*B*	*C*	*D*	*E*	*F*	*G*
1 kg	80	61.5	20	23	4.0	12	26.6
500 g	61	48.5	16	19	2.5	10	22.5
200 g	48	37.5	14	16	2.0	7	14.8
100 g	37	28.5	12	14	2.0	6	12.7
50 g	28	21.5	10	11	1.5	3	11.0
20 g	21	16.5	9	10	1.5	3	8.4
10 g	16	12.5	**	**	1.5	**	6.9
5 g	12	9.5	**	**	1.0	**	5.9
2 g	9	7.0	**	**	1.0	**	4.4
1 g	6.5	**	**	**	**	**	3.6

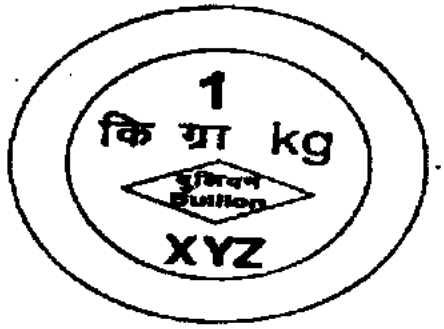

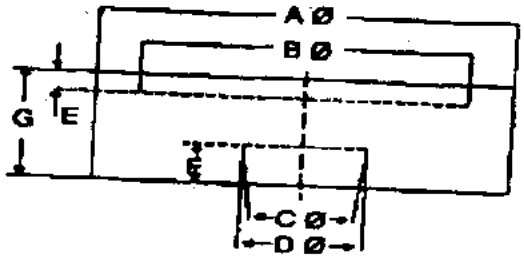

Flat Cylindrical Bullion Weights
Figure – 7

Note : The abbreviation किलो, किग्रा, ग्रा or ग्राम may be indicated in the regional script.

7. Dimensions

(a) The dimensions of cylindrical knob type weights shall be as specified in Tables 3 and 4.

(b) The dimensions of flat cylindrical weight shall be as specified in Table 6.

(c) The tolerances on dimensions for both types of weights shall be—

(i) for weights 1 kg and below ± 10 per cent.

(ii) for weights above 1 kg ± 5 per cent.

8. Finish

The surface of the weights shall be polished, smooth and shall not show any porosity to the naked eye.

9. Permissible error

The maximum permissible errors shall be as specified below :

Denomination	*Permissible error*	
	Verification (mg)	*Inspection (mg)*
(1)	(2)	(3)
10 kg	500	± 500
5 kg	250	± 250
2 kg	100	± 100
1 kg	50	± 50
500 g	25	± 25
200 g	10	± 10
100 g	5	± 5
50 g	3	± 3
20 g	2.5	± 2.5
10 g	2.0	± 2.0
5 g	1.5	± 1.5
2 g	1.2	± 1.2
1 g	1.0	± 1.0

10. Stamping

(a) The Legal Metrology Officer's seals shall be stamped on the lead pellet within the loading hole, where loading hole is provided.

(b) The Legal Metrology Officer's seals shall be stamped on the bottom of weights which have no loading hole.

E.—SHEET METAL WEIGHTS

1. Denominations

Sheet metal weights shall have the following denominations:—

Milligram series : 500, 200, 100, 50, 20, 10, 5, 2 and 1.

2. Shape

(a) Bullion weights shall be circular in shape and shall have one edge bent for ease of handling (See Figure 8).

(b) Non-bullion weights shall have the following shapes and shall have one edge bent for ease of handling (See Figure 9).

Denomination (mg)	*Shape after bending along one of the sides*
5, 50, 500	Equilateral triangle
2, 20, 200	Square
1, 10, 100	Regular hexagon

3. Material

Sheet metal weights shall be made or manufactured from brass, stainless steel, aluminium nickel-silver or cupro-nickel sheets.

4. Method of manufacture

Sheet metal weights shall be made or manufacture by pressing or by any other suitable process.

5. Markings

(a) Sheet metal weights shall bear only the denomination and symbol for 'milligram' as

474 GI/11-87

TABLE 7

DIMENSIONS FOR SHEET METAL WEIGHTS

(NON-BULLION) (Figure 9) (All dimensions in millimetres)

Denomination (mg)	*A1*	*A2*	*A3*	*B*	*H*
50	14.0	—	—	2.0	3.0
200	...	12.0	...	2.0	3.0
100	...	...	12.0	2.0	2.5
50	8.0	...	...	1.5	2.5
20	...	7.0	...	1.5	2.5
10	...	...	7.0	1.5	2.5
5	4.5	...	...	1.0	2.0
	...	4.0	...	1.0	2.0
	...	...	4.0	1.0	2.0

indicated below (See also Figure 8 and Figure 9).

(मिग्रा) 500 mg

Note : The abbreviation मिग्रा may be indicated in the regional script.

(b) The maker's or manufacture's name or trade mark shall be indicated indelibly on the box containing the sheet metal weights.

(c) The box shall also bear a serial number to identify it.

6. Dimensions

(a) The dimensions of sheet metal weights shall be as specified in Tables 7 and 8.

(b) The tolerances on dimensions shall be ± 10 per cent.

TABLE 8

DIMENSIONS FOR SHEET METAL WEIGHTS

(BULLION) (Figure 8)

(All dimensions in millimetres)

Denomination	*D*	*C*	*H*
500 mg	15	2.0	3.0
200 mg	13	2.0	3.0
100 mg	11	2.0	2.5
50 mg	9	1.5	2.5
20 mg	8	1.5	2.5
10 mg	7	1.5	2.5
5 mg	6	1.0	2.0
2 mg	5	1.0	2.0
1 mg	4	1.0	2.0

7. Finish

The sheet metal weights shall be clearly sheared and free from burrs. The stamped markings on sheet metal weights shall be legible and deep enough to ensure indelibility but not so deep as to crack the sheet metal weights.

8. Permissible error

The maximum permissible errors shall be as specified below :

Denomination (mg)	*Maximum permissible error*			
	Verification		*Inspection*	
	Bullion (mg)	*Non-bullion (mg)*	*Bullion (mg)*	*Non-bullion (mg)*
1	2	3	4	5
500	0.8	2.5	± 0.8	± 2.5
200	0.6	2.0	± 0.6	± 2.0
100	0.5	1.5	± 0.5	± 1.5
50	0.4	1.2	± 0.4	± 1.2
20	0.3	1.0	± 0.3	± 1.0
10	0.25	0.8	± 0.25	± 0.8
5	0.20	0.6	± 0.20	± 0.6
2	0.20	0.6	± 0.20	± 0.6
1	0.20	0.6	± 0.20	± 0.6

9. Stamping

(a) Legal Metrology Officer's seals shall not be affixed on weights of 10 mg, 5 mg, 2 mg and 1 mg. These weights shall be authenticated by the issue of a certificate of verification which shall also mention the serial number on the box containing the weights.

(b) Legal Metrology Officer's seal for year alone shall be stamped on sheet metal weights of 20 mg.

Figure 8
Sheet Metal Bullion Weights

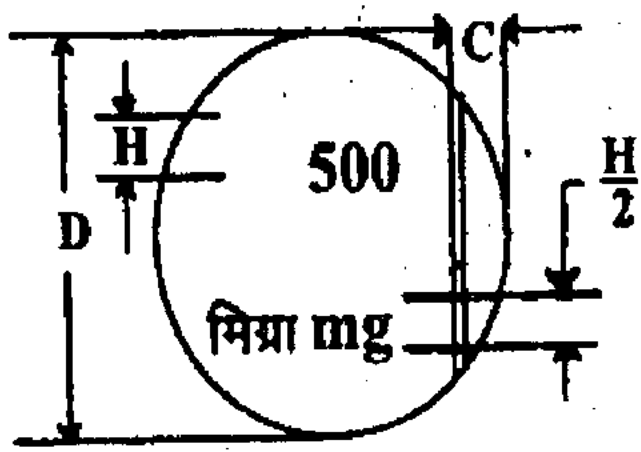

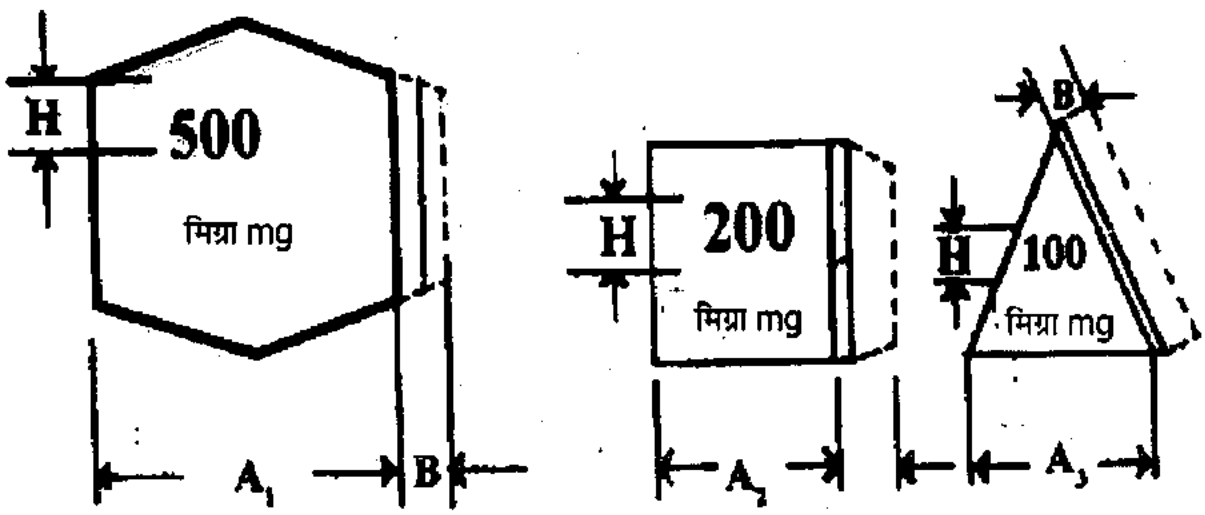

Figure 9
Sheet Metal Weights

(c) The Legal Metrology Officer's seals (namely, year, quarter and identification) shall be stamped on sheet metal weights of denominations 500 mg to 50 mg, both inclusive.

PART II

CARAT WEIGHTS

1. General

This Part deals with the requirements for carat weights intended for use in weighing pearls, diamonds and other precious stones.

2. Denominations

The denominations of carat weights shall be as given below (the gram and milligram equivalents are shown against each for ready reference) :

(a) KNOB WEIGHTS		*(b) SHEET METAL WEIGHTS*	
Denomination carat	*Equivalent g*	*Denomination carat*	*Equivalent mg*
500	100	2	400
200	40	1	200
100	20	0.5	100
50	10	0.2	40
20	4	0.1	20
10	2	0.05	10
5	1	0.02	4
		0.01	2
		0.005	1

3. Knob weights

(a) *Materials*

(i) The weights shall be made from rolled, drawn or extruded material and shall not be cast.

(ii) The weights shall be made from brass, bronze, gun-metal, nickel-chromium alloy or non-magnetic stainless steel.

(b) *Shape and dimensions*

The shape and dimensions of the weights shall be as shown in Figure 10 and Table 9.

(c) *Permissible error*

The maximum permissible errors shall be as specified below :

Denomination Carat	*Verification mg*	*Inspection mg*
500	5.0	± 5.0
200	3.0	± 3.0
100	2.5	± 2.5
50	2.0	± 2.0
20	1.5	± 1.5
10	1.2	± 1.2
5	1.0	± 1.0

TABLE 9

NOMINAL DIMENSIONS OF KNOB CARAT WEIGHTS

[Clause 3(b)]

(All dimensions in millimetres)

Denominations Carat	*A**	*C***	*D*	*E*	*F*	*G*	*H*
500	12.0	0.4	4.0	10.0	6.0	32.0	14.2
200	10.0	0.4	3.0	8.5	5.0	23.0	10.8
100	8.0	0.4	2.5	7.0	4.0	19.0	7.9
50	6.0	0.3	2.0	5.5	3.0	15.0	6.4
20	5.0	0.3	2.0	4.0	2.0	11.0	4.6
10	4.0	0.3	1.5	3.0	1.5	9.0	3.5
5	3.0	0.2	1.5	2.5	1.5	7.0	2.9

* *The cross-section of the top of the knob is elliptical for all weights major axis being twice the minor axis (therefore for all weights B= A/4)*

** *This is a recommended dimension.*

Note : With a material of density 8400 kg/m³ (exactly) the above dimensions will give weights which possess masses to within the required tolerance limits on the plus side (this ensures a longer life for the weights). However, as the density of the material may vary considerably as also the manufacturing techniques, a tolerance of ±10 per cent is allowed on all obligatory dimensions (that is those other than C). Final values of masses can be adjusted by controlling the dimension H.

4. Sheet metal weights

(a) *Materials*—Weights of denominations 0.2 carat and below shall be made of aluminium sheet. Weights of higher denominations shall be made of sheets of brass, aluminium, nickel-silver, nickel chromium alloy, bronze or cupro-nickel.

(b) *Shape and dimensions*—Sheet metal weights shall be square with one edge bent for ease of handling (See Figure 11). They shall have dimensions given in Table 10.

(c) *Permissible error*

The maximum permissible errors shall be as specified below:—

Denomination Carat	*Verification mg*	*Inspection mg*
1	2	3
2	0.8	±0.8
1	0.6	±0.6
0.5	0.5	±0.5
0.2	0.4	±0.4
0.1	0.3	±0.3
0.05	0.25	±0.25
0.02	0.20	±0.20
0.01	0.20	±0.20
0.005	0.20	±0.20

TABLE 10

Nominal dimension for sheet metal carat weights

Denomination Carat	*Size mm*
2	12
1	10
0.5	9
0.2	8
0.1	7
0.05	6
0.02	5
0.01	4
0.005	3

Tolerance ± 10 per cent

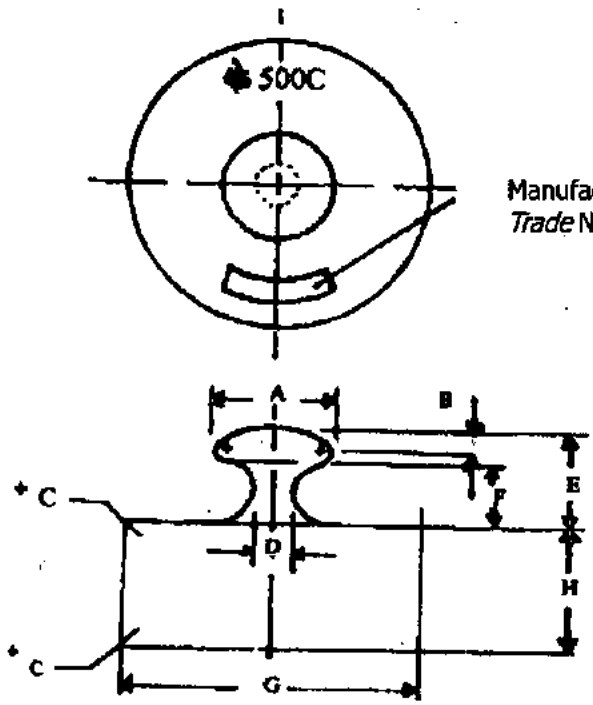

Figure 10
Knob Carat Weight

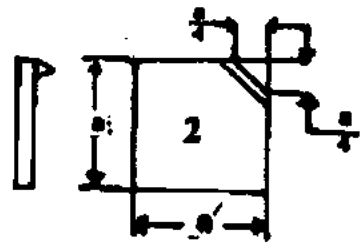

Figure 11
Sheet Metal Carat Weight

474 GI/11—88

5. Manufacture and finish

(a) The surface of the weights shall be reasonably smooth. Sheet metal weights shall be smoothly sheared and shall be free from burrs.

(b) For better stability and finish, the weights may be nickel, or rhodium plated.

6. Marking

(a) Every weight, except weights of 50 carat and lower denominations, shall have the manufacturer's name or trade mark and the denomination indelibly marked on it.

(b) The denomination shall consist of the International form of Indian numeral prefixed and suffixed by the letter 'के' and 'c' respectively except that in the case of weights below 50 carat, only the numerals shall be marked. The size of numerals and letters indicating the denomination of weights shall be at least twice the size of letters indicating the manufacturer's name or trademark.

Note : The abbreviation 'के' may be indicated in the regional script.

(c) The marking shall be legible and deep enough to ensure indelibility over a long period of use, but not so deep as to crack the weight itself.

7. Packing

(a) Each set of carat weights shall, in addition to the series of denomination specified under 2, consist of an additional piece of weight of 2 carat and the relevant decimal multiple of two.

(b) The weights shall be supplied in a suitable velvet-lined box. The small sheet metal weights shall be so housed and provided with a cover of glass or any other transparent material that they will not get dislodged from their proper places. The box shall also contain a pair of forceps for lifting the weights.

PART III

STANDARD WEIGHTS FOR TESTING OF HIGH CAPACITY WEIGHING MACHINES

1. Scope

These specifications shall apply to standard weights having a nominal value equal to or greater than 50 kg, used for testing (and adjusting, where appropriate) of high capacity weighing machines in accuracy class III (medium) and class IV (ordinary), defined in the Metrological regulations for non-automatic weighing machines.

(a) It sets forth the technical and metrological requirements to which these standard weights must conform. In particular it establishes the values of the maximum permissible errors for standard weights and minimum densities as functions of the maximum number of scale divisions on the machines to be verified using these weights.

2. Nominal values

The nominal value of the standard weight is 50 kg, or of the form k x 10n kg, where k is generally equal to 1, 2 or 5, and n is whole number equal to or greater than 2.

3. Shape

The standard weights must have a relatively simple shape, with no sharp edges or corners. They shall not have any cavities liable to cause a rapid accumulation of dirt. If they are intended to run on a flat surface (or on rails), they must be equipped with roller tracks (or grooves) of limited area.

4. Basis of adjustment

The standard weights must be adjusted taking the reference conditions applicable to the adjustment of standard weights as follows :

(a) standard reference density : 8000 kg/m^3,

(b) ambient air density : 1.2 kg/m^3, and

(c) equilibrium in air at 20°C, without correction for air buoyancy.

5. Adjusting cavity

The standard weights must include one or more adjusting cavities. It must be possible to seal the closure of these cavities; the closures must be water-tight and airtight (e.g., by means of a joint). The volume of adjusting cavities must be at least equal to 5/100 of the volume of the standard weight. Furthermore, it is desirable that, after the initial adjustment, a volume of at least 1/100 of the volume of the standard weight remains empty.

6. Material

Standard weights are in general made of grey cast iron. They may be made of one or more other materials, provided the provisions of paragraph 8 are observed. The material used must be of such hardness and strength that they withstand the loads and shocks liable to occur under normal conditions of use.

7. Surface condition

The standard weights may be coated with materials suitable for providing protection against corrosion by rendering their surface impermeable. This coating must withstand shocks and atmospheric conditions. Zinc-plating is an example of a coating which meets with these specifications.

8. Metrological characteristics

The maximum permissible error for the standard weights must not exceed 1/3 of the maximum permissible error for the corresponding load considered, on the weighing machine under verification. The absolute error for various denominations of standard weights shall be as given in Annexure I. These maximum permissible errors for the standard weights must therefore be compatible with the number of scale divisions on the machines which they are intend to verify. Furthermore, the density of standard weights must be such that a variation of ± 10 per cent ambient air density, with respect to its reference value, does not produce a variation, in the result of weighing the standard weight in air, exceeding 1/4 of its maximum permissible error. By way of application of these requirements, the following table gives examples of the relation amongst :—

(a) the maximum number of scale divisions "n" on weighing machines under verification (assumed to be in accuracy class III);

(b) the maximum permissible positive or negative relative error on standard weights used for initial verification of these machines; and

(c) the corresponding lower limit for the density of the standard weights.

TABLE

Maximum number of scale divisions "n" on weighing machines (accuracy class III), capable of verification with the standard weights during verification	Maximum permissible positive or negative relative error on the standard weights	Minimum density kg/m³
(1)	(2)	(3)
1000	3.3/10000	1231
3000	1.7/10000	2087
5000	1.0/10000	3000
10000	0.5/10000	4364

Note : Independent of the requirements concerning the density of the weights, it is desirable to obtain—particularly for reference standards or those of a high nominal value—a density of about 8000 kg/m³. For example, a cast iron body may be used, which incorporates a special cavity in which a lead core may be cast, with a mass of approximately 30 per cent of the total nominal mass of the standard.

9. Inscriptions and markings

Standard weights must carry their nominal value in numerals, followed by the symbol for the unit used and a verification mark.

10. Adjustment and verification

Adjustment of the standard weights must be such as to comply with the maximum permissible errors given in this specification. In particular this may be achieved in the case of adjustment by the double substitution weighing technique (Gauss transposition method, or Borda substitution method), using as reference standards, weights having an error of less than 1/3 of the maximum permissible error for the weight to be adjusted, and as the comparator machine, a weighing machine for which the limit of repeatability error does not exceed 0.2 times of the maximum permissible error for the weight to be adjusted.

Note : Standard weights used for verification of a weighing machine with "n" scale divisions may be used for the re-verification of a weighing machine with "p.n" scale divisions, where the maximum permissible error for this re-verification is "p" times (where p has a value equal to or greater than 1), the maximum permissible error on verification.

11. Dimensions

The Dimensions for 500 kg and 1000 kg denominations weights shall be as given in Annexure II

ANNEXURE I

ABSOLUTE ERRORS FOR STANDARD WEIGHTS

Normal Value kg	Maximum permissible error for the standard weights			
	3.3/10,000	1.7/10000	1/10000	0.5/10000
	Corresponding absolute error (grams)			
50	17	8.5	5	2.5
100	33	17	10	5
200	66	33	20	10
500	170	85	50	25
1000	330	170	100	50
2000	660	330	200	100
5000	1700	850	500	250
	1000	3000	5000	10000

Maximum number of scale divisions $\leq$ n $\geq$ on weighing machines (accuracy class III) capable of being verified (verification) with the standard weights (see note given at clause 10)

ANNEXURE II

TYPICAL EXAMPLES

This annexure contains diagrams of weights used for testing of high capacity weighing machines, which are considered suitable for use as patterns because of their design and ease of use.

RECTANGULAR STANDARD WEIGHTS

500 kg. and 1000 kg.

SUITABLE FOR STACKING

Dimensions (mm)

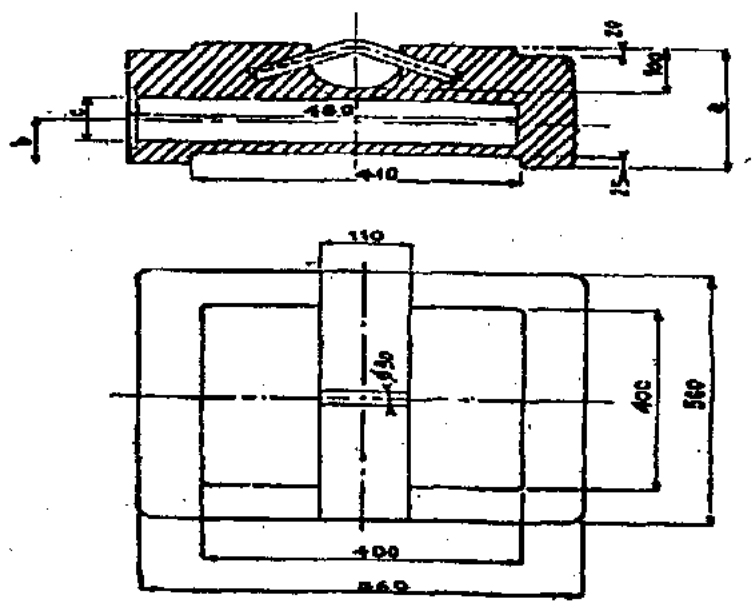

	a	b	c
500 kg	273	100	Ø 100
1000 kg	504	120	Ø 140

RECTANGULAR STANDARD WEIGHT 1000 kg SUITABLE FOR STACKING

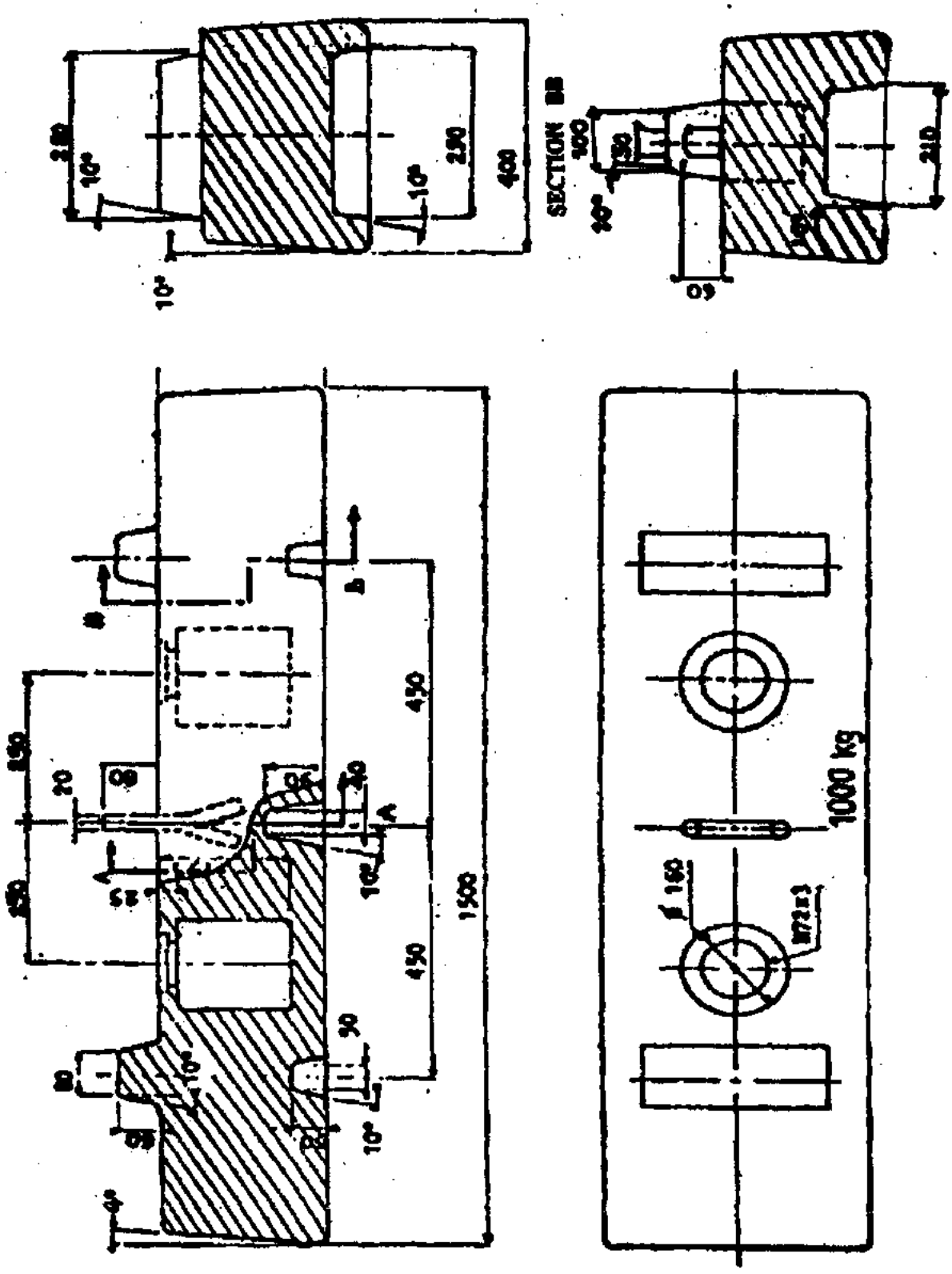

474 GI/11—89

CYLINDRICAL STANDARD WEIGHTS

500 kg and 1000 kg

SUITABLE FOR STACKING AND ROLLING

Dimensions (mm) FOR 500 kg WEIGHT

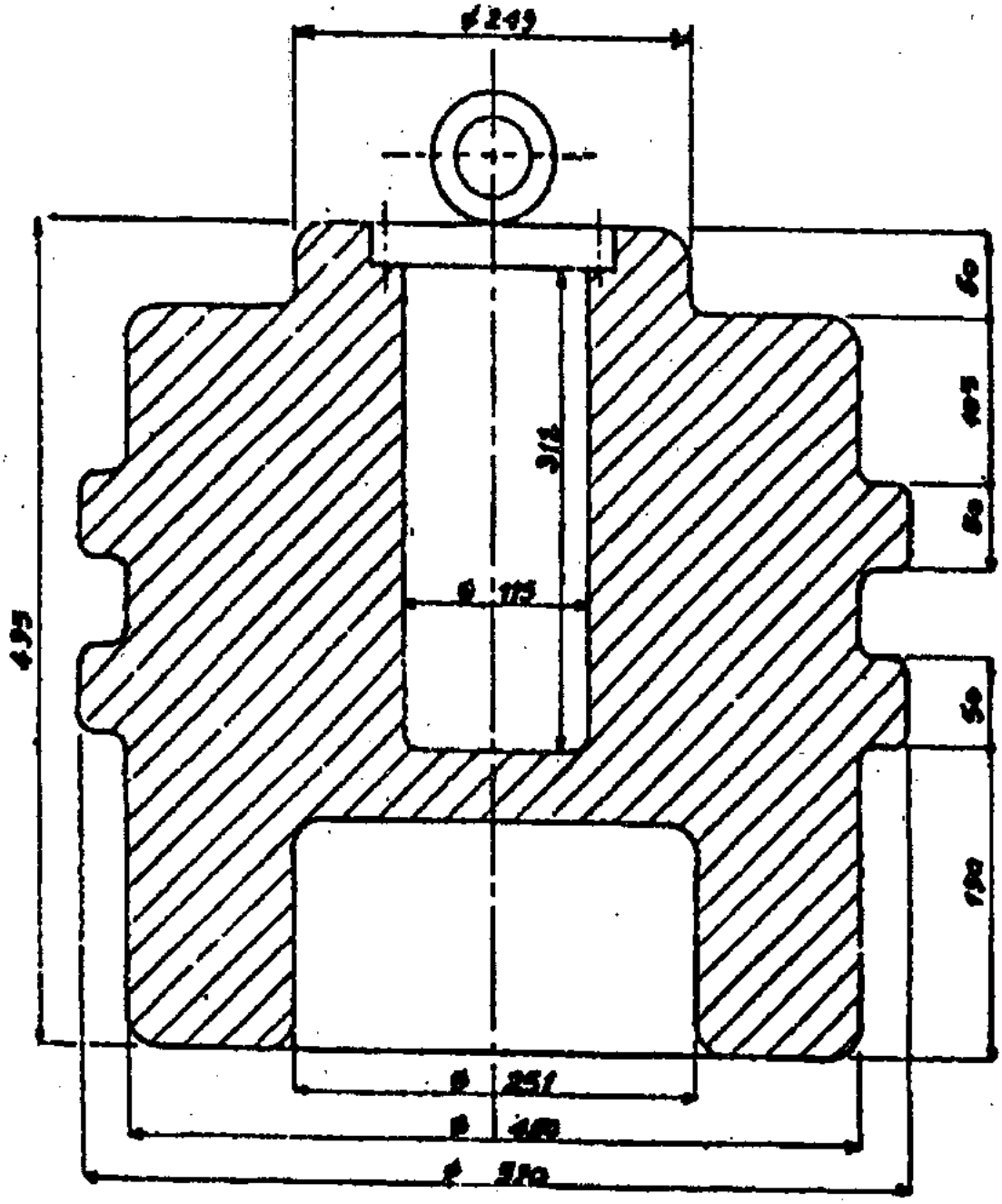

[r = 10

R = 20]

SIXTH SCHEDULE

SPECIFICATIONS FOR MEASURES

[See Rule 12]

PART I - LIQUID CAPACITY MEASURES

1. General

This Part deals with two types of cylindrical liquid measures, namely the dipping and the pouring types, and one type of conical measures.

2. Denominations

The denominations of the different types of measures shall be as under :

Cylindrical measures		*Conical measures*
Dipping type	*Pouring type*	
1 litre	2 litres	20 litres
500 ml	1 litre	10 litres
200 ml	500 ml	5 litres
100 ml	200 ml	2 litres
50 ml	100 ml	1 litre
20 ml	50 ml	500 ml
	20 ml	200 ml
		100 ml

3. Shapes and dimensions

(a) The shape and dimensions of cylindrical measures (dipping and pouring types) shall be as shown in Figures 12 and 13 and Table 11.

TABLE 11

Nominal Dimensions of Cylindrical Capacity Measures

Denominations	*D*	*H*	*B*		*G*
			Max.	*Min.*	*Min.*

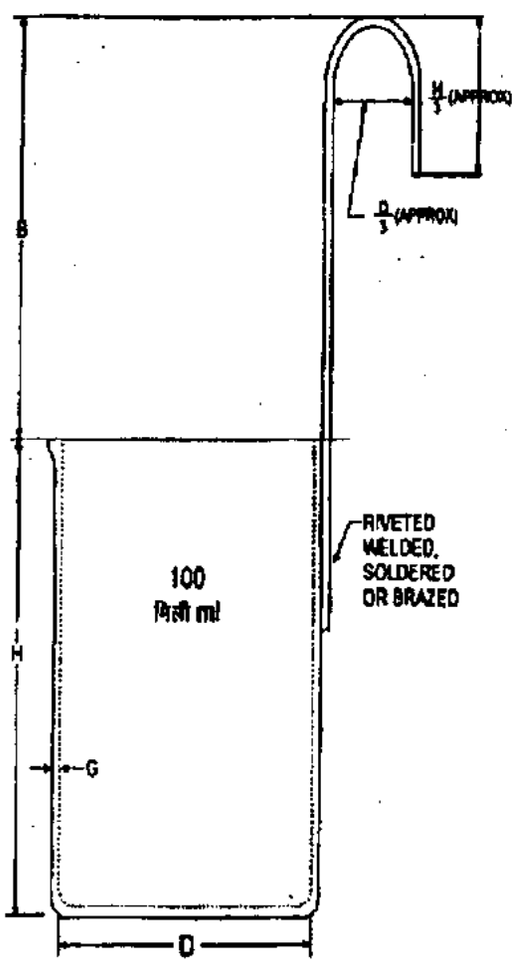

DIPPING TYPE CYLINDRICAL MEASURES (SCHEMATIC)
FIGURE- 12

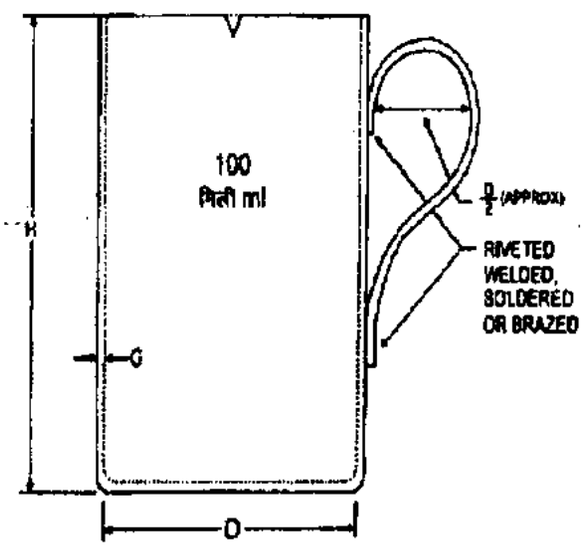

POURING TYPE CYLINDRICAL MEASURES (SCHEMATIC)
FIGURE-13

(b) The shape and dimensions of conical measures shall be as shown in Figure 14 and Table 12.

TABLE 12

NOMINAL DIMENSIONS OF CONICAL CAPACITY MEASURES

Denomination	*A*	*B*	*C*	*D*	*E*	*F*	*G* Min.	*H*	*J*	*K*	*M*
20 litres	97	388	288	208	194	390	1.00	35	86	29	30
10 litres	77	308	307	174	154	309	1.00	30	75	26	25
5 litres	61	244	245	147	122	247	0.80	25	65	24	20
2 litres	45	180	180	118	90	182	0.80	20	56	22	16
1 litre	36	143	143	95	72	145	0.63	20	45	18	16
500 ml	28	114	113	74	56	115	0.63	15	35	14	12
200 ml	21	84	84	53	42	86	0.63	10	24	10	8
100 ml	17	66	67	41	34	69	0.63	10	18	7	8

Note 1 : All dimensions in millimetres.

Note 2 : Tolerance on dimensions ± 10 per cent except in case of 10 litre and 20 litre measures for which the tolerance shall be ± 5 per cent.

4. Material

(a) Cylindrical measures—The body of cylindrical measures shall be manufactured in one piece from aluminium alloy sheets, brass sheets or stainless steel sheets. The minimum thickness of the sheets shall be as specified in Table 11.

(b) Conical measures—The conical measures shall be fabricated from galvanised steel sheets, aluminium alloy sheets, copper sheets, brass sheets, stainless steel sheets or tinplate. The minimum thickness of the sheets shall be as specified in Table 12.

(c) The handles for the measures shall be fabricated from the same material as that used for the body.

5. Manufacture and finish

(a) Cylindrical measures made of brass sheets and copper sheets shall be tinned or tin-plated uniformly all over the inside as well as the outside surfaces. Conical measures made of brass sheets or copper sheets, shall be well tinned or tin-plated uniformly all over the inside when they are used for measuring commodities like milk, edible oils and such other food articles.

(b) The handles shall be of robust construction and shall be well formed and shaped generally as shown in Figure 12, 13 and 14. They shall be securely fixed to the body by means of riveting, soldering or brazing.

Note 1: Capacity measures when used for measuring milk shall have the handle fixed by welding, soldering or other suitable methods. Brazing so as not to leave pockets in which dirt may accumulate.

Note 2: Dipping type of cylindrical measures may also have handles substituted by two suitable but diagonally opposite brackets affixed to the walls of the measure by means of soldering, brazing or welding so as to hold the measure properly by a handle at right angles to the walls of the measures to facilitate its use in hot and boiled milk trade.

(c) The measures shall be free from any surface defects and indentations and shall be smoothly finished at the top.

(d) Cylindrical measures shall be provided with a well formed and proportioned spout to facilitate pouring.

(e) Conical measures shall be provided with a retaining lip to avoid spilling. The retaining lip shall be provided with a plug of suitable

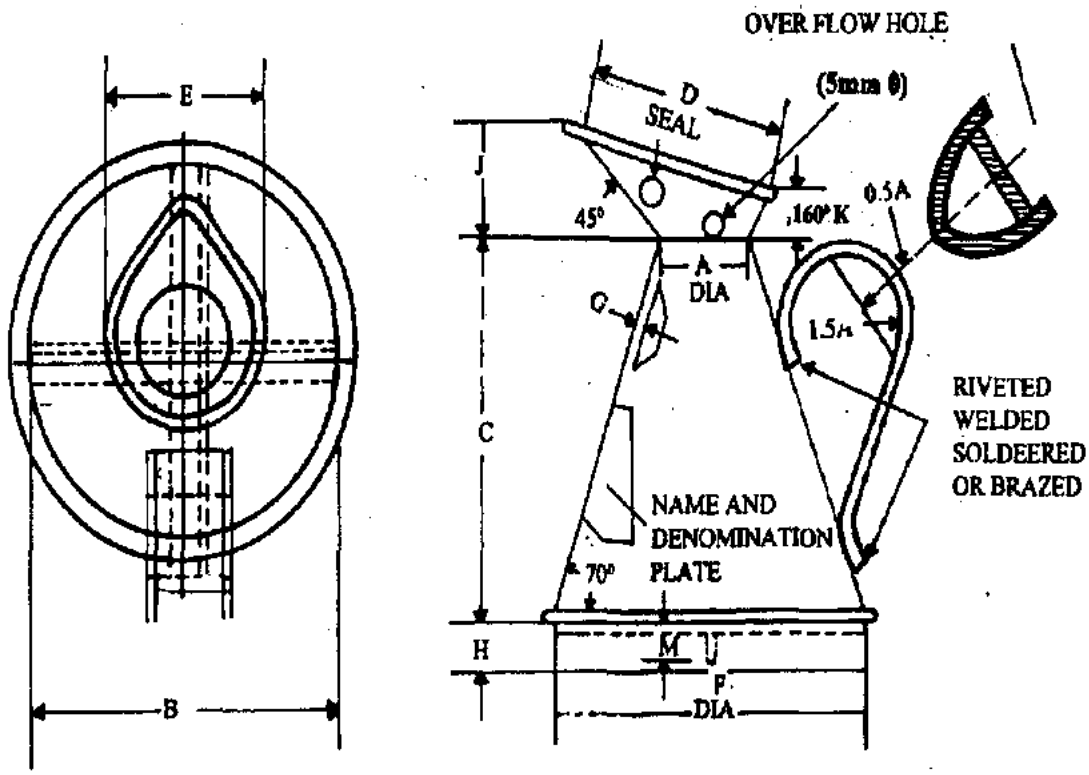

POURING TYPE CONICAL MEASURE (SCHEMATIC)

FIGURE-14

material with a collar to receive the lead for the Legal Metrology Officer's seal. A small hole, about 5 mm in diameter shall be provided at the bottom of the retaining lip to indicate the level to which the measures shall be filled and the hole shall be located on the side at right angles to the handle. The bottom of conical measures shall be suitably reinforced.

(f) The measures shall be so designed that, when they are tilted 120 degrees from the vertical, they shall become completely empty.

(g) The finished measures shall have adequate robustness for durability.

6. Permissible error

The maximum permissible errors shall be as specified:

Denomination	*Verification in excess only*		*Inspection*			
	Cylindrical measures ml	*Conical measures ml*	*Cylindrical measures*		*Conical measures*	
			Excess	*Deficiency ml*	*Excess*	*Deficiency ml*
20 l	...	100	Error same as in verification	...	Error same as in verification	50
10 l	...	50		...		25
5 l	..	30		...		15
2 l	30	15		15		7.5
1 l	20	10		10		5
500 ml	15	8		7.5		4
200 ml	8	4		5		2
100 ml	5	3		2.5		1.5
50 ml	3	...		1.5		...
20 ml	2	...		1		...

474 GI/11-90

7. Marking

(a) Every cylindrical measure shall have the denomination and manufacturer's name or trade mark indelibly stamped on it. In the case of conical measures, the denomination and manufacturer's name or trade-mark shall be either embossed on the body or indelibly marked on a name plate securely fixed to the body.

(b) The denominations shall be indicated with the abbreviations 'l' and 'ली' for litre; and 'ml' and 'मिली' to indicate millilitre.

Note : The abbreviation 'ली' or 'मिली' may be indicated in the regional script.

The size of numerals and letters indicating denominations on the measures shall be twice the size of the letters indicating the manufacturer's name or trade mark.

8. Stamping

(a) *Cylindrical capacity measures:* The Legal Metrology Officer's seal shall be stamped just above the indication of the denomination of the capacity measure.

(b) *Conical capacity measures:* The Legal Metrology Officer's seal shall be stamped on the lead pellet provided for this purpose.

PART II

DISPENSING MEASURES

1. General

This Part deals with two types of dispensing measures made of glass or transparent plastic materials, used for dispensing purposes. Conical dispensing measures of capacity 100 ml may also be used in the sale of liquor.

2. Types and denominations

Dispensing measures shall be of the following types and denominations:—

(a) *Conical measures*—200 ml, 100 ml, 50 ml, 20 ml, 10 ml and 5 ml.

(b) *Beaker measures*—1000 ml and 500 ml.

3. Materials

(a) *Glass measures*—The measures shall be made from clear and transparent glass. They shall be well annealed; free from stones, cracks and chippings; and as free as possible from blisters and other defects. Lead glass shall not be used for the measures.

(b) *Transparent plastic measures*—The measures shall be made from a clear and transparent plastic material, manufactured from plasticised polyvinyl chloride or copolymer, the major constituent of which is polyvinyl chloride. The plastic materials used shall not contain any constituents known to be injurious to health and likely to be extracted by contact with liquids.

4. Definition of capacity

The capacity corresponding to any graduation marks is defined as the volume of water at 27°C, expressed in millilitres, required to fill the measure to that graduation mark at 27°C, the observer's eye being level with the front graduation marks and the lowest point of the water meniscus appearing to touch the top edge of that mark.

5. Shape, construction, etc. of conical measures

(a) *Shape*—The measures shall be conical as shown in Figure 15A to 15G. The 50 ml measures shall be either tall or squat as shown in Figure 15C and 15D respectively.

(b) *Construction*—

(i) Each measure shall have a pouring lip. The form of the lip shall be such that, when the measure is filled with water to the highest graduation mark, the contents may be poured from the lip in a stream falling clear of the outside of the measure.

(ii) Each measure shall have a base on which it shall stand vertically without rocking when placed on a horizontal surface. The size of the base shall be such that the measure, when empty, shall not fall when placed on a plane inclined at 15° to the horizontal. The bottom of the measuring space shall be uniformly rounded and shall merge smoothly into the sides of the measure.

(iii) The wall thickness of the measures shall be sufficient to ensure sturdy construction and shall not show any local departures from uniformity.

(iv) The external surface of the measure shall be a cone having an included

angle of not less than 13° and not more than 14°.

(v) The overall volume of the measure shall be such that when it is filled with water to the highest graduation mark and a volume of water equal to half its nominal capacity is added to it, there shall be no overflow. But, the addition of a further quantity of water equal to quarter the nominal capacity shall result in water overflowing from the pouring lip.

(c) *Graduations*—

(i) The conical measures shall be graduated in accordance with Table 13.

(ii) With the pouring dip of measure facing to the right, the front graduation marks shall be placed at right angles to and on the right hand side of a vertical line extending from above to the top graduation mark to near the base of the measure and below the bottom graduation mark.

(iii) The graduation marks shall be marked as shown in Figure 15A to 15G. The marks shall be engraved or etched and they shall be of a uniform thickness not exceeding 0.3 mm., provided that they may taper slightly towards the ends. The graduation marks shall lie in planes perpendicular to the axis of the measure and shall be horizontal when the measure is standing on a horizontal surface.

(iv) Each graduation number shall be etched or engraved close to the end of the graduation mark to which it relates and in such a manner that it would be bisected by a prolongation of that graduation mark.

(v) The numbered graduation marks shall have the minimum length specified in Col. 7 of Table 13. The unnumbered graduation marks shall be at least two-third the length of the numbered graduation marks and clearly shorter than the numbered marks.

TABLE 13
Details of Conical Measures

Denomination	Graduated At	Numbered At	Back Lines At	Lowest Graduation mark	Height of lowest graduation Mark above bottom of measuring space	Minimum length of mark
1	2	3	4	5	6	7
ml	ml	ml	ml	ml	cm	cm
200	50, 100, 120, 140, 160, 180, 200	50, 100, 120, 140, 160, 180, 200	50, 100, 200	50	6.5±0.5	2.0
100	Every 10 ml from 10 to 100 ml	10, 20, 40, 60, 80, 100	20, 60, 100	10	3.0±0.5	1.75
50 (Tall)	Every 10 ml from 10 to 50 ml	10, 30, 50	30, 50	10	4.0±0.5	1.5
50 (Squat)	Every 10 ml from 10 to 50 ml	10, 30, 50	30, 50	10	2.0±0.5	1.5
20	Every 5 ml from 5 to 20 ml	5, 10, 20	10, 20	5	2.5±0.5	1.25
10	Every ml from 2 to 10 ml	2, 4, 6, 8, 10	2, 6, 10	2	2.5±0.5	1.0
5	Every ml from 1 to 5 ml	1, 3, 5	3, 5	1	2.5±0.5	0.75

(vi) The height of the lowest graduation mark above the lowest point of the bottom of the measuring space shall be within the limits given in Col. 6 of Table 13.

FIGURE-15A 2000 ml

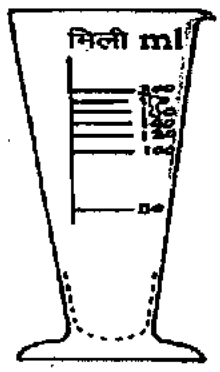

FIGURE-15B 100 ml

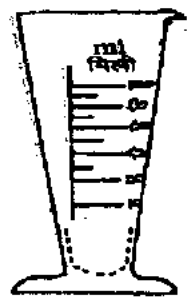

FIGURE-15C 50 ml (Tall)

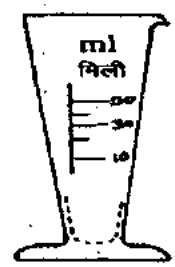

FIGURE-15D 50 ml (SQUAT)

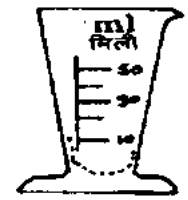

FIGURE-15E 20 ml

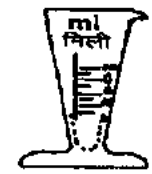

FIGURE-15F 10 ml

FIGURE-15G 5 ml

(d) *Permissible errors*—The maximum permissible errors on verification or on inspection shall be as specified below (in ml) :

Capacity corresponding to graduation mark	*Measures except 50 ml (Squat)*	*50 ml (Squat) measures*
(1)	(2)	(3)
200, 180, 160	± 3.0	...
140, 120, 100	± 2.0	..
90, 80, 70, 60	± 1.5	..
50, 40	± 1.0	± 1.00
30	± 0.8	± 1.00
20	± 0.6	± 0.80
15	± 0.5	—
10, 9	± 0.4	± 0.6
8, 7, 6	± 0.3	—
5	± 0.25	—
4	± 0.20	—
3	± 0.16	—
2	± 0.12	—
1	± 0.08	—

Note : The permissible errors, apart from those of the 50 ml squat measure, apply to graduation marks corresponding to the capacities stated, irrespective of the nominal capacity of the conical measure concerned.

6. Shape construction, etc. of beaker measures

(a) *Shape*—The measure shall be in the form shown in Figure 16A and 16B.

(b) *Construction*—

(i) Each measure shall be provided with a pouring lip. The form of the lip shall be such that, when the measure is filled with water to the highest graduation marks, the contents may be poured from the lip in a stream falling clear of the outside of the measure.

(ii) Each measure shall be provided with a base on which it shall stand vertically without rocking when placed on a horizontal surface. The size of the base shall be such that the measure, when empty, shall not fall when, placed on a plane inclined at 15° to the horizontal. The bottom of the measuring space shall be uniformly rounded and shall merge smoothly into the sides of the measure.

(iii) The overall volume of the measure shall be such that when the measure is filled with water to the highest graduation mark and a volume of

water equal to quarter the denomination volume is added to it, the water shall not overflow.

(c) *Graduations*—

(i) The graduation marks shall be marked as shown in Figures 16A and 16B and Table 14. The marks shall be etched or engraved and shall be of a uniform thickness not exceeding 0.3 mm, provided that they may taper slightly towards the ends. The graduation marks shall lie in places perpendicular to the axis of the measures and shall be horizontal when the measure is standing on a horizontal surface.

(ii) Each graduation numbered shall be etched or engraved close to the end of the graduation mark to which it relates and in such a manner that it would be bisected by a prolongation of that graduation mark.

(iii) The distance between the highest and the lowest graduation marks and the height of the lowest graduation mark above the inside of the base of the measure shall be in accordance with Cols. (3) and (4) respectively of Table 14.

(d) *Permissible error*—The maximum permissible errors on verification or on inspection shall be ± 7 ml for 1000 ml measures and ± 5 ml for 500 ml measure.

7. Marking

Each measure shall have permanently and legibly engraved or etched its denomination in Indo-Arabic numerals, the abbreviations 'ml' and 'मिली' being used to indicate millilitres. The manufacturer's name or trade mark shall be marked on the underside of the base of each measure.

Note : The abbreviation 'मिली' may be indicated in regional script.

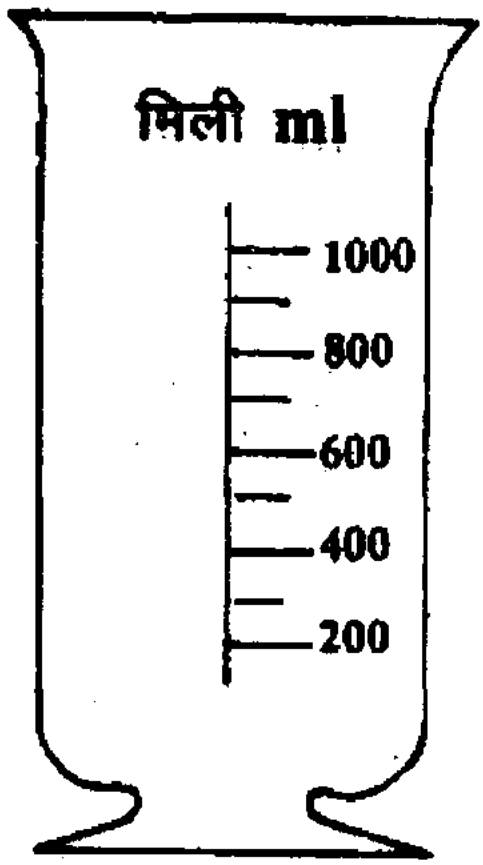

1000 ml

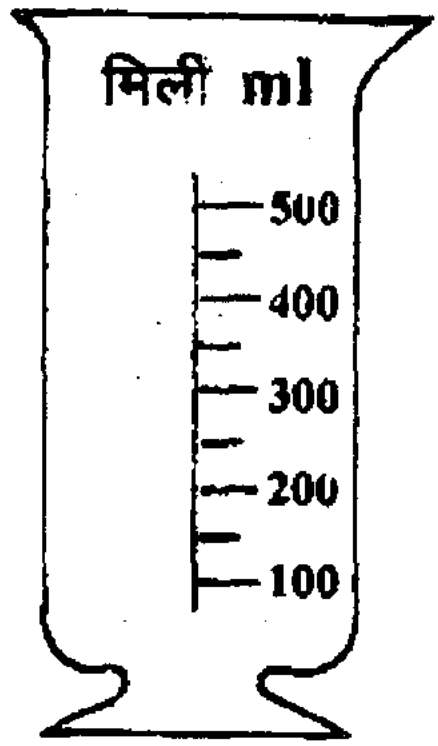

500 ml

BEAKER MEASURES OF METRIC SERIES

FIGURE-16 A **FIGURE-16 B**

474 GI/11-91

TABLE 14

GRADUATION AND DIMENSIONS OF BEAKER MEASURES

Denomination	*Graduation at*	*Distance between lowest & highest graduation marks*	*Height of lowest graduation mark above bottom of measuring surface*	*Diameter of top*	*Min. Diameter of base*	*Overall height*
(1) ml	*(2)*	*(3) cm*	*(4) cm*	*(*5) cm*	*(*6) cm*	*(7)*
1000	200 to 1000 ml at each 100 ml; numbered back lines at 200, 600 and 1000 ml	11±1	4±1	12	9	23
500	100 to 500ml at each 50 ml; numbered at each 100 ml; unnumbered back lines at 100, 300 and 500	9±0.5	3±0.5	10	8	18

* *These are only recommendatory*

8. Stamping

The Legal Metrology Officer's seal shall be affixed after each verification just above the uppermost graduation marks.

PART III- LIQUOR MEASURES

1. General

This Part deals with the requirements for liquor measures of two types.

2. Types

Liquor measures shall be of the following two types:—

(i) Hand operated, and

(ii) Automatic.

3. Denominations

The denominations of the types of liquor measures shall be as given below:—

Hand operated : 100 ml, 60 ml and 30 ml.

Automatic : 20 ml.

4. Material

The body of the liquor measures shall be made from glass or brass sheet or stainless steel sheet. The minimum thickness of the sheet for liquor measures shall be 1.2 mm.

5. Shapes and dimensions

The shapes and nominal dimensions of hand operated liquor measures and automatic liquor measures shall be as given in Figure 17, 18 and 19 respectively.

6. Manufacture

(a) Liquor measures made of brass sheet shall be well tinned or silver-plated uniformly all over the inside as well as the outside surface.

(b) Hand operated liquor measures shall be well formed. Measures of 60 ml and 30 ml capacity may be joined together with a common stem by brazing.

(c) The measures shall be free from any surface defects and indentations and shall be smoothly finished.

(d) Automatic liquor measures shall be capable of delivering 30 ml of liquor when tilted at an angle of 120 from the vertical.

(e) Hand operated liquor measures shall have a knurled edge.

7. Permissible error

The maximum permissible errors shall be as given below:—

Denomination	*Permissible error*
100 ml	± 3 ml
60 ml	± 2 ml
30 ml	± 1 ml

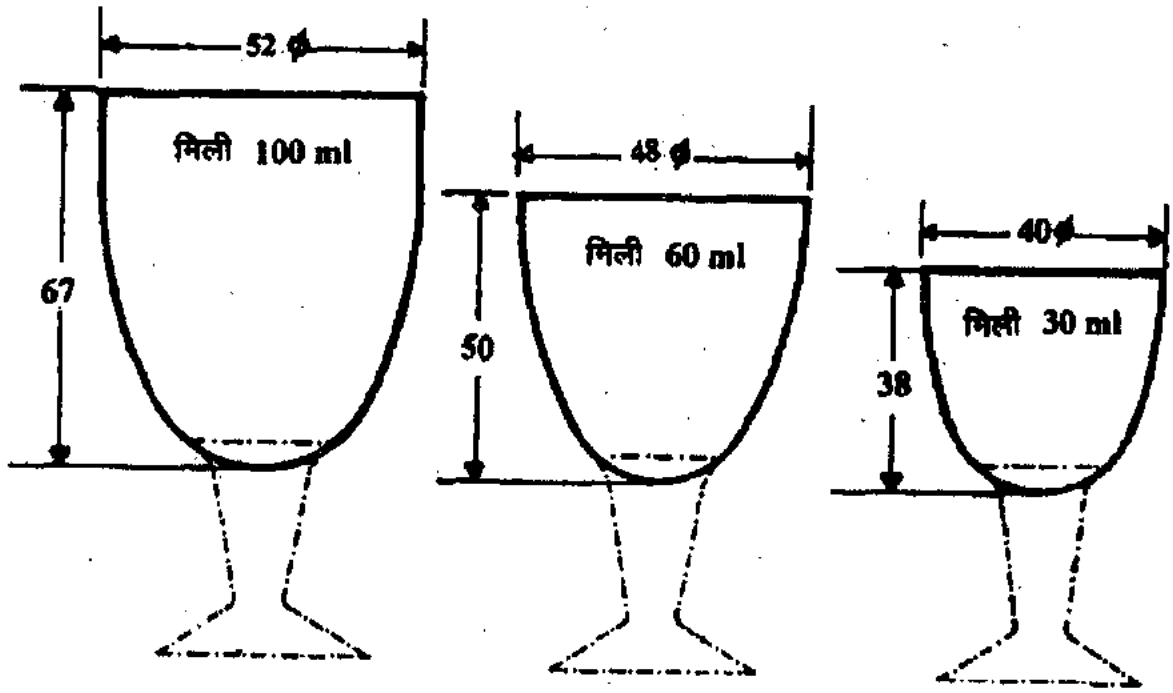

SHAPE AND NOMINAL DIMENSIONS OF COMBINED LIQUOR MEASURES

100 ml, 60 ml and 30 ml capacity

FIGURE-17

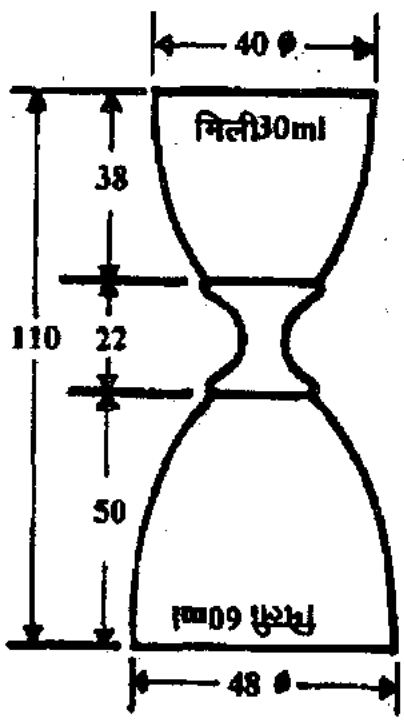

SHAPE AND NOMINAL DIMENSIONS
OF COMBINED LIQUOR MEASURE
60 ml and 30 ml Capacity
FIGURE-18

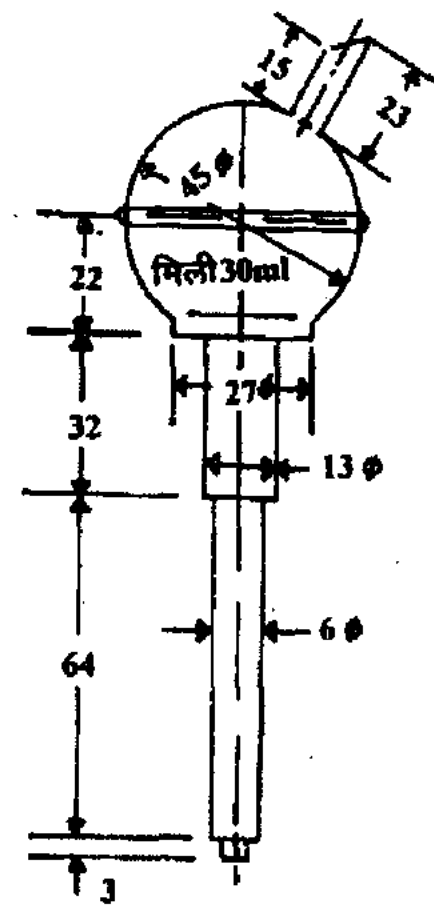

SHAPE AND NOMINAL DIMENSIONS
OF AUTOMATIC LIQUOR MEASURE
FIGURE-19

8. Markings

(a) Every liquor measure shall have the denomination and manufacturer's name or trade mark legibly and indelibly marked on it.

(b) The denomination shall consist of international form of Indian numerals and the abbreviations 'ml' and 'मिली' to indicate millilitres. The size of numerals shall be twice the size of the letters indicating the manufacturer's name or trademark.

Note : The abbreviation 'मिली' may be indicated in the regional script.

9. Stamping

Legal Metrology Officer's seal shall be affixed after every verification just below the indication of the denomination mark.

PART IV- LENGTH MEASURES (NON-FLEXIBLE)

1. General

This Part deals with the non-flexible type of length measures made or manufactured from metal or wood.

2. Denominations

The denominations of the length measures shall be as follows :—

Metallic measures	Wooden measures
1 m	2 m
0.5 m	1 m
	0.5 m

3. Material, shape, etc. of metallic measures

(a) *Material*—The measures shall be made from mild steel, brass or stainless steel.

(b) *Shape and dimensions*—The shape and dimensions of the measures shall be as is shown in Figure 20.

(c) *Graduations*—The graduation marks shall be made at every centimetre or at every centimetre for the first ten centimetres and thereafter at every five centimetres. The graduation marks at every ten centimetres shall be numbered. The marks at the centimetre divisions shall extend over half the breadth and those at five centimetre divisions over full breadth of the measures. A cross mark shall be provided at 25 cm in the case of 0.5 m measure and at 25, 50 and 75 cm in the case of 1 m measure (See Figure 20). The graduations shall be only on one side of the measure.

(d) *Permissible error*—The error on the length between any two consecutive five centimetre graduation marks shall not exceed ± 0.25 mm and further the error from the beginning of the measure to any graduation mark shall not exceed 1.0 mm for 1 metre bar and 0.5 mm for half metre bars provided that the errors on the full length of the measures shall not exceed the following limits :

Denomination	*Verification*		*Inspection*	
	Excess	*Deficiency*	*Excess*	*Deficiency*
1 m	1.0 mm	0.5 mm	1.0 mm	1.0 mm
0.5 m	0.5 m	0.25 mm	0.5 mm	0.5 mm

(e) *Provision for stamping*—The measures shall be provided with a copper rivet near each end (see Figure 20) firmly fixed in a hole, countersunk on both sides, for the Legal Metrology Officer's stamp. An arrow head shall be marked at each end of the measure to provide the points for checking the length.

4. Material, shape, etc. of wooden measures

(a) *Materials*—The measure shall be made from well seasoned timber of any one of the following species :—

(a) Teak (*Tectona grandis Linn. f*)

(b) Roseweed (*Delbergia Latifolia Roxb*)

(c) Shisham (*Dalbergia sissoo Roxb*)

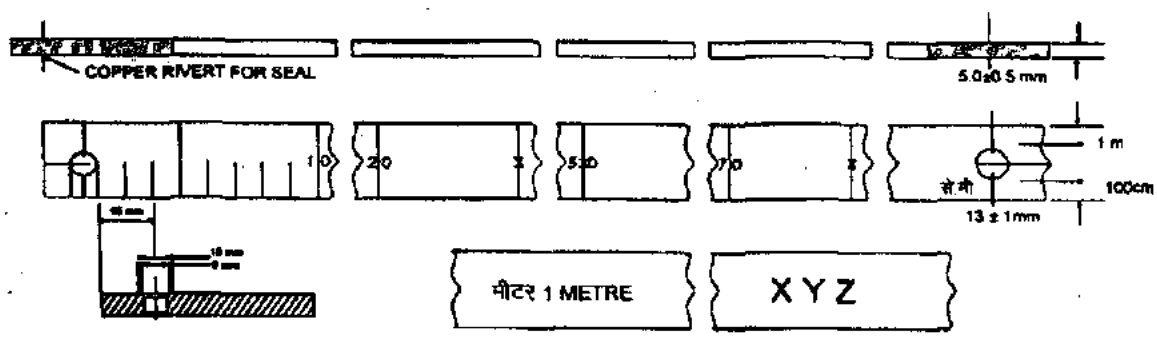

SECTIONAL ENLARGED VIEW OF RIVET *ENLARGED VIEW OF REVERSE SIDE*

METALLIC LENGTH MEASURE

FIGURE - 20

(d) Haldu (*Adhina cordifolia Hoock. f*)
(e) Bijasal (*Pterocarpus marsupium Roxb*)
(f) Boxwood (*Blaxux sempervirens*)
(g) Beech (*Fagus sylvatica*)

(b) *Shape and dimensions*—The shape and dimensions of the measures shall be as shown in Figure 21.

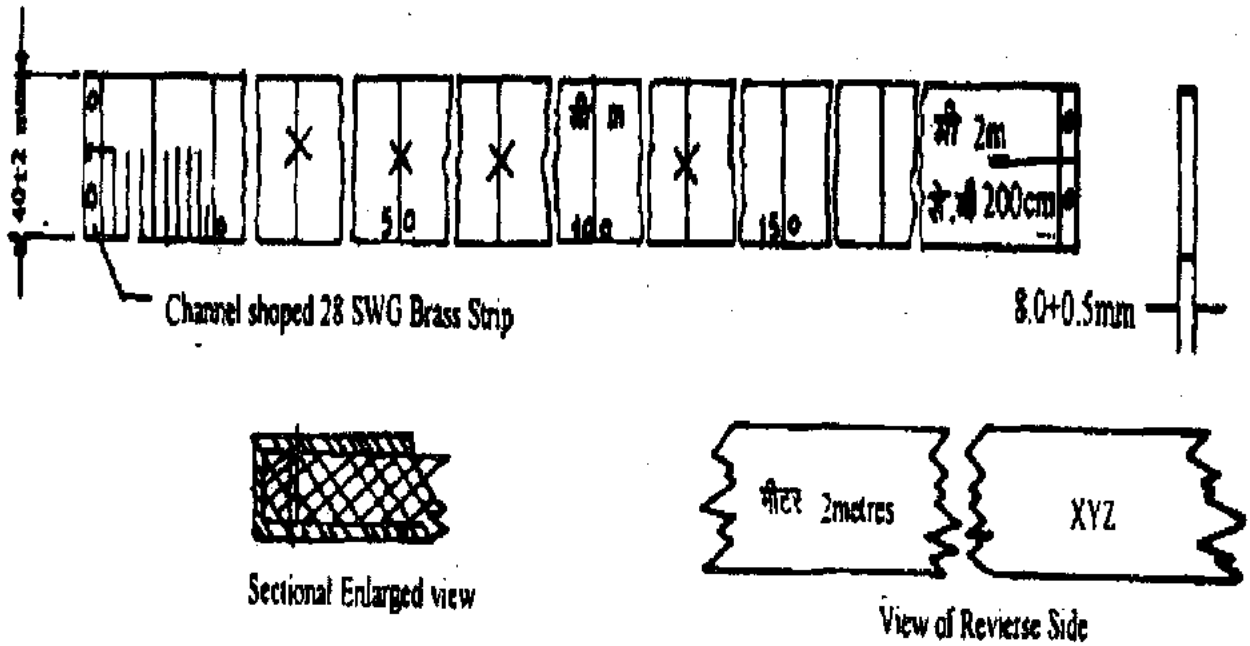

WOODEN MEASURE

FIGURE-21

(c) *Graduations*—The graduation marks shall be made at every centimetre for the first ten centimetres and thereafter at every five centimetres. The graduation marks at every ten centimetres shall be numbered. The marks at the centimetre divisions shall extend over half the breadth and those at the five centimetre division over the full breadth of the measures. A cross mark shall be provided at every 25 cm, excluding the one metre and two metre graduations. (See Figure 21) Last and first marks shall coincide with the end faces.

The graduation shall be on one side of the measures only.

(d) *Permissible error*—The error on the length between any two consecutive five centimetre graduation marks shall not exceed ± 1 mm, and further the error from the beginning of the measures to any graduation marks shall not exceed 2 mm, for 2 metre bar, 1 mm for 1 metre bar and 0.5 mm for half metre bar provided that the errors on the full length of the measure shall not exceed the following limits :

Denomination	*Verification*		*Inspection*	
	Excess	*Deficiency*	*Excess*	*Deficiency*
2 m	4 mm	2 mm	4 mm	4 mm
1 m	2 mm	1 mm	2 mm	2 mm
0.5 mm	1 mm	0.5 mm	1 mm	1 mm

(e) *Provision for stamping*—Each measure shall be provided at each end with a metal tip not less than 1 cm in width, securely riveted with two rivets at each end, as shown in Figure 21 for receiving the Legal Metrology Officer's stamp. The width of the tips shall be included in the total length of the measure.

5. Manufacture and finish

(a) The measure shall be evenly finished and shall be reasonably straight.

(b) In the case of metallic measures, the graduation marks and the cross marks shall be legible and deep enough to ensure

474 G/11-92

indelibility over a reasonably long period of use, but not so deep as to make the measures liable to be easily bent. In the case of wooden measures, the markings shall be finished neatly, sharply and legibly, in a colour contrasting with the wood finish. They shall be visible from a distance and shall remain indelible over a reasonably long period of use.

6. Marking

(a) The denomination shall be stamped on the ungraduated side of the measure at about one-third of the total length from the beginning of the measure and the manufacturer's name or trade mark at a similar distance from the end of the measure. In the case of wooden measures, the markings shall be finished in the same manner as the graduations.

(b) In indicating the denominations the numerals shall be preceded by the word 'मीटर' and followed by metre. The size of numerals and letters, indicating denominations of the measures shall be twice the size of the letters indicating the manufacturer's name or trade mark.

(c) The end of the measure shall be marked on the graduated side with the International form of Indian numeral indicating the denomination, preceded and followed by the letters 'मी' and 'm'.

Note : The word and abbreviation 'मीटर' or 'मी' may be indicated in the regional script.

PART V - FOLDING SCALES

1. General

This Part deals with wooden folding scales.

2. Denominations

The denominations of folding scales shall be 1 m and 0.5 m.

3. Materials

(a) The scales shall be made from strips or sheets of wood. They shall be reasonably uniform, in width and thickness throughout the entire length.

(b) The scales shall be made of any one of the following species of timbers:—

(i) Boxwood (*Buxus sempervirens*)
(ii) Gardenia (*Gardenia sp*)
(iii) Parrotia (*Parrotia jucquemontiana*) (*Randia dumetorum*)
(iv) Dudhi (*Wrightia sp*)
(v) Bamboo.
(vi) Haldu (*Adina cordifolia Hoock f.*)
(vii) Kalam (*Mitragyna parvifolia korth*)
(viii) Kuthan (*Hymenodictyon excelsum wall*)
(ix) Gamri (*Gmelina abrorea Linn*)

(c) The timber shall be thoroughly seasoned and radially sawn. The moisture content of the timber shall be between 8 and 12 per cent.

The timber shall be free from knots, cracks, sap wood, snakes and other visible defects such as decay, insect attack, etc. and shall be fairly straight-grained.

4. Manufacture

(a) *General*—The scales shall be reasonably straight and flat, the edges parallel to each other and the ends reasonably square.

(b) No point on any of the edges shall be more than 0.5 mm distant from the straight line connecting its extremities. No point on the surface of a scale shall be more than 0.5 mm distant from the plane of the surface.

(c) The scales shall consist of four pieces hinged together and it shall be an end measuring scale. (First and last graduation shall be the end face). The joints shall work smoothly without undue play and shall be sufficiently free from the folds to be opened and closed without strain. The brass caps shall be closely fitted and strongly secured to the blades. They shall be made flush with the sides of the scales.

(d) A protective layer of suitable lacquer or varnish or any other suitable material shall be provided.

5. Dimensions

The principal dimensions of the scale blanks shall be as follows :—

Length of graduated part (m)	*Width max. (mm)*	*Min. (mm)*	*Thickness (mm)*
0.5	15.0	14.5	4 ± 1
1	20.0	19.0	5 ± 1

6. Graduations

(a) Graduation marks shall be made at every millimetre with a longer line at every 5 mm and centimetre. The length of the graduation lines shall be as follows:—

cm marks 6 mm
5 mm marks 4 mm
1 mm marks 2.5 mm

(b) The lines shall be fine and clear, of uniform depth and thickness, and perpendicular to the edges. The thickness of lines shall be not more than 0.2 mm for stamped scales and 0.1 mm for engine divided scales. The lines shall be of sufficient depth to be legible and indelible.

(c) The lines shall be filled in black and natural background or with a suitable colour which shall contrast with the colour of the base to ensure legibility.

(d) Every centimetre shall be numbered in international form of Indian numerals. The height of the figures shall be between 2.0 and 2.5 mm.

7. Permissible error

The cumulative error for the entire graduated part shall not exceed ± 0.50 mm. Further, over any 10 cm length scale, the error shall not exceed ± 0.2 mm.

8. Marking

(a) The denomination shall be stamped on the ungraduated side of the measure at a distance about one-third of the total length from the beginning of the measure. The manufacturer's name or trade mark shall be indicated indelibly at the same distance from the other end of the measure. The markings shall be finished in the same manner as the graduations.

(b) In indicating the denominations the numerals shall be preceded by the word "मीटर" and followed by 'metre'.

Note : The word "मीटर" may be indicated in the regional script.

9. Stamping

The Legal Metrology Officer's seal shall be affixed either on the metal strip at the ends or the central hinge as may be convenient.

PART VI-FABRIC OR PLASTIC TAPE MEASURE

1. General

(a) This Part deals with fabric or plastic tape measures, which are used for measurements, where the use of rigid length measures is not convenient or practicable.

(b) Tape measures of 0.5 m to 5 m, made of materials specified in clause 4(b), are intended to be used for measurements required in the tailoring trade, anatomical measurements or household measurements. Tape measures of 5 m and above made of materials specified in clause 4(c) are intended to be used for measurements of buildings, roads, timber and timber products and for other similar measurements but not for measurements of land, storage tanks, fermentation vats and other similar measurements.

2. Classes of accuracy

Fabric or plastic tape measure shall be divided into three classes of accuracy, namely, Class I, Class II and Class III, in accordance with their accuracy.

3. Nominal lengths

Fabrics or plastic tape measures shall be made in nominal lengths of 0.5 m, 1 m, 1.5 m, 2 m, 3 m, 4 m, 5 m or multiples of 5 metres, provided that the maximum nominal length shall not exceed 100 metres.

Note : The nominal length of a fabric or plastic tape measure is the distance at the reference temperature of 20°C between the initial and terminal graduation lines, when the tape measure is stretched, in the wet or dry condition, and without friction on a horizontal plane surface, under an extension of 20 newtons. The length so measured shall be equal, within the limits of maximum permissible errors, to the nominal length of the tape measure.

4. Material

(a) The materials used shall be adequately strong, stable and resistant to atmospheric conditions under the normal conditions of use and shall comply with the following requirements :—

(i) When ordinarily used at temperatures between ± 8°C of the reference temperature, the variation in length of the tape measure shall not exceed the maximum permissible error.

(ii) When used with a change of ± 10 per cent in the tension, the variation in length of the tape measure shall not exceed the maximum permissible error.

(b) *Tape measures of nominal length 0.5m to 5 m :*

(i) The tape measure may be made from a suitable fabric or plastic material.

(ii) The fabric shall be coated with suitable paints, enamels or other suitable coating so as to give the tape measure a good finish. All coatings shall be non-cracking and water resistant.

(c) *Tape measure of nominal length above 5 m :*

(i) If made from fabrics, the fabric may be reinforced length-wise with rust-proof and rigid wires of metal or other equivalent material.

(ii) If made from plastic materials, the tape measure shall be reinforced length-wise by means of rust-proof and rigid wires of metal or glass fiber.

(iii) If made from any other material, the tape measure shall satisfy the conditions specified in clause 4(a).

5. Manufacture

(a) *General :*

(i) Tape measures shall be well-made, robust and carefully finished.

(ii) The cross-section of the tape measures shall have such dimensions and shape that, under normal conditions of use it allows the tape measure to have the accuracy specified for its class.

(iii) Tape measures shall be so made that when they are stretched over a plane surface their edges are practically straight and parallel.

(iv) The rings, winding, devices or other devices shall be attached to the tape in such a manner that they do not cause any inaccuracy or permanent deformation in the tape.

(b) *Tape measures of nominal length 0.5m to 5 m :*

(i) Tape measures of nominal length 0.5m to 5m shall have a width of not less than 5mm and not more than 25 mm.

(ii) If not wound on a spool or in a case, both the ends of the tape measure shall be reinforced with plastic or metal strips, of the same width as the tape measure, over a length of not less than 10mm or more than 100 mm.

(iii) If wound on a spool or in a case, the tape measure shall have a metal ring or other device securely attached to the outer end of the tape measure. A device, retraction or winding of the tape shall be provided.

(c) *Tape measure of nominal length above 5 m :*

(i) The tape measures shall have a width of not less than 10 mm and a thickness between 0.3 and 0.6 mm.

(ii) A metal ring shall be securely attached to the outer end of each tape measure. The ring shall be securely fastened to the tape measure by a metal strip of the same width as the tape.

(iii) The outer end of the tape measure shall be reinforced over a length of not less than 100 mm by a strip of leather or other suitable material of the same width as the tape measure. The strip shall pass round the inner end of the ring and under the metal strip.

Note : This strip, besides serving as a protective device shall also be utilised for affixing the stamp of verification.

(iv) The tape measure shall be rolled into a suitable container or wound on a winding device made of metal, plastic, leather or other suitable material.

6. Graduations

(a) *General requirements :*

(i) Graduation lines shall be clear, uniform, indelible and so made as to ensure easy and unambiguous reading.

(ii) The value of the graduations shall be of the form 1×10^n, 2×10^n or 5×10^n, the exponent "n" being positive or negative whole number or zero. The value of the graduation, however, shall not exceed :

1 cm, on measures of nominal length less than or equal to 2m,

10 cm, on measures of nominal length more than 2 m, but less than 10 m,

20 cm, on measures of nominal length more than 10 m, but less than 50m,

50 cm, on measures of nominal length equal to or more than 50 m.

(iii) Graduation lines shall be reasonably straight, perpendicular to the axis of the tape measures and of uniform thickness throughout the length.

(iv) Graduations lines shall be so made that they form a clear and distinct scale and their thickness does not cause any inaccuracy of reading.

(b) *Tape measures of nominal length 0.5 m to 5 m :*

(i) The zero graduation line may be located at the outer end of the ring or

other device or may commence on the tape itself at a length equal to or greater than 50 mm from the outer end of the ring or other device.

(ii) The tape measures may be graduated throughout at every millimetre or every 5 mm.

(iii) The graduation lines at every 10 mm shall be marked in such a manner that there is no confusion between the 10 mm lines and the millimetre or 5 mm lines.

(iv) The tape measures may be graduated on one side or both the sides. If the tape is graduated on one side, the manufacturer's name, trade mark, advertisement or other similar matter may be printed on the ungraduated side of the tape measure.

(c) *Tape measures of nominal length above 5 m :*

(i) The zero graduation line may be located at the outer end of the metal ring or on the tape itself, at a length equal to or greater than 100 mm from the outer end of the ring.

(ii) The tape measure may be graduated at every millimetre, every 5 millimetre or every 10 millimetre.

(iii) The graduation lines at every 10 mm shall be marked in such a manner that there is no confusion between the 10 mm graduation lines and the millimetre or 5 mm graduation line.

(iv) The graduation lines at every 10 m shall have a length approximately half the width of the tape.

(v) Every graduation line at 50 mm shall have the same length as the graduation line at 10 mm but may have an arrow at its end. This requirement shall not apply to tape measures graduated at every millimetre.

(vi) The zero graduation line, the graduation lines at every 100 millimetres and at every metre shall have a length equal to the width of the tape.

7. *Numbering*

(a) *General requirements :*

(i) The numerals shall be indicated clearly, uniformly and indelibly and shall be easily and unambiguously legible.

(ii) The places, dimensions, shape, colour and contrast of the numerals shall be suitable for the scale and graduation lines to which they relate.

(iii) The numerals shall be marked parallel to or perpendicular to the axis of the tape measure depending upon the intended manner of use of the measure.

(b) *On tape measures of nominal length 0.5 m to 5 m :*

(i) Every graduation line at 10 mm shall be marked with the complete number of centimetre.

Explanation : The graduation number marked may be, for example 122 and not 22 after completion of one metre.

(ii) The height of the numerals shall not exceed two-thirds the width of the tape measures.

(c) *On tape measures of nominal length above 5 m :*

(i) The graduation lines at every 100 mm and at every metre shall be numbered. The numerals shall have a height of not more than two-thirds of the width of the tape.

(ii) the metre graduations shall be accompanied by the symbol 'm' and, if required, 'मी'

Note : The abbreviation 'मी' may be indicated in the regional script.

(iii) After the graduation line at one metre, every graduation line at 100 mm may be marked with an additional numeral indicating the completed number of metres. This numerals, if provided, may be located just above, below or in line with the numeral of the 100 mm graduation line. The height of the numeral may be approximately half the height of the numerals indicating 100 mm.

8. *Maximum permissible error*

(i) On verification, under the conditions specified in clause 2, the error on the length

474 GI/11-93

between the axis of any two graduation lines shall not exceed :

for Class I ± (0.1 + 0.1L) mm;

for Class II ± (0.3 + 0.2L) mm; and

for Class III ± (0.6 + 0.4L) mm;

Where L is the length between the two graduation lines concerned, expressed in metres, rounded off to the next higher whole number of metres.

(ii) The maximum permissible error on tape measures on inspection shall be twice that specified for verification, the methods of verification remaining unchanged.

(iii) Tape measure of nominal length 0.5 m to 5 m shall belong to accuracy Class II or Class III.

(iv) Tape measures of nominal length above 5 m shall belong to accuracy Class I, Class II or Class III.

9. *Markings*

(a) *Tape measures of nominal length 0.5 m to 5 m :*

The tape measures and the case or container, if provided shall be marked at a suitable place with the following markings :

(i) nominal length in metres.

(ii) manufacturer's name or trade mark or both.

(iii) class of accuracy II or III in an oval.

(iv) an indication of the location of zero on the scale.

(v) model approval number issued by the Central Government.

(b) *Tape measure of nominal length above 5 m :*

The tape measure and the case or container or other device, where provided shall be marked near the zero graduation line and on the container, case or other device with the following markings :—

(i) nominal length in metres.

(ii) manufacturer's name or trade mark or both.

(iii) class of accuracy : I, II or III in an oval.

(iv) an indication of the location of zero on the scale.

(v) model approval number issued by the Central Government.

(c) The inscription shall be clearly visible and legible.

(d) Advertising inscriptions, if made, shall be carried out of such a manner that they did not intrude in any way with the use of the tape measure.

10. *Sealing*

The stamp of verification shall be affixed on the metal, plastic, leather or other strip provided at the beginning of the tape measure.

PART VII—STEEL TAPE MEASURES

1. *General*

This Part deals with steel tape measures which are used for measurements where the use of rigid length measures is not convenient or practicable.

2. *Classes of accuracy*

Steel tape measures shall be divided into three classes, namely, Class I, Class II and Class III, in accordance with their accuracy.

3. *Nominal lengths*

The tape measures shall be made in nominal lengths of 0.5 m, 1 m, 1.5 m, 2 m, 3 m, 4 m, 5 m or multiples of 5 m, provided that the maximum nominal length not exceed 200m.

Note : The nominal length of a steel tape measure is the distance at the reference temperature of ± 20°C, between the initial and terminal graduation lines, when the tape measure is stretched, without friction, on a horizontal plane surface, under a tension of 50 newtons. The length so measured shall be equal, within the limits of maximum permissible errors, to the nominal length of the tape measures.

4. *Materials*

(a) The materials used shall be adequately strong, stable and resistant to environmental influences under normal conditions of use and shall comply with the following requirements :

(i) when ordinarily used at temperatures between ± 10°C of the reference temperature, variation in length of the tape measure shall not exceed the maximum permissible error;

(ii) when used with a change of ± 10% in the tensions, the variation in length of the tape measure shall not exceed the maximum permissible error.

(b) The tape measure shall be made from steel or stainless steel.

5. *Manufacture*

(a) Tape measures shall be well made, robust and carefully finished. (See Figure 22 to 26).

(b) The cross section of the tape measures shall

have such dimensions and shape that, under normal conditions of use, it allows the tape measures to have the accuracy specified for its class.

Note : It is recommended for guidance of manufacturer and users that tape measure may have a width of not less than 5 mm and a maximum thickness of 0.4 mm.

(c) The steel tape measure shall be so made that when it is stretched on a plane surface, the edges are practically straight and parallel.

(d) At the zero end, tape measures shall be provided, with a ring or other device for facilitating withdrawal. The ring or other device, when provided, shall be fastened to the tape measure by a metal strip of the same width as the tape.

(e) The tape measures shall be capable of being wound into suitable container or other winding device of robust construction and made of metal, plastic, leather or other suitable material.

(f) The winding devices shall be so designed that they do not cause any inaccuracy or permanent deformation in the tape.

(g) The edges of tape measures shall be slightly rounded.

(h) The tape measure shall be provided with rust proof coating and shall be free from burrs.

6. Graduations

(a) *General requirements*

(i) Graduation lines shall be clear, uniform, indelible and so made as to ensure easy and unambiguous reading.

(ii) The value of the graduations shall be of the form 1×10^n, 2×10^n or 5×10^n metre where the exponent 'n' being a positive or negative whole number or zero.

The value of the graduations, however, shall not exceed :

1 cm, on measures of nominal length less than or equal to 2 m,

10 cm, on measures of nominal length more than 2 m but less than 10 m,

20 cm, on measures of nominal length more than 10 m, but less than 50 m,

50 cm, on measures of nominal length equal to or more than 50 m.

(iii) Graduation lines shall be reasonably straight, perpendicular to the axis of the tape measure, and of uniform thickness throughout their length.

(iv) Graduation lines shall be so made that they form a clear and distinct scale and that their thickness does not cause any inaccuracy of reading.

(b) Tape measures above 5 m to 200 m shall be graduated only on one side. Tape measures of 0.5 m to 5 m may be graduated on both sides (Only metric scale).

(c) The graduated lines, numbers and other markings shall be either in relief, engraved, typographically printed or made in any other suitable manner.

(d) The zero of the scale may be located at the outer or inner edge of the ring or other device, or may also be located on the tape measure itself, at a length equal to or greater than:

(I) 50 mm from the outer end of the ring or other device, in the case of tape measures of nominal length 0.5 m to 5 m; and

(II) 100 mm from the outer end of the ring or other device, in the case of tape measures of nominal lengths above 5 m.

(e) Tape measure of denominations 0.5m to 5m may be graduated throughout at every millimetre, every 5 millimetre or every 10 millimetre.

(i) The graduation lines at every 10mm shall be marked in such a manner that there is no confusion between the 100 mm graduation lines and the millimetre or 5 mm graduation lines.

(ii) In the case of tape measures graduated at every 5 mm or 10 mm, not less than the first 100 mm shall be subdivided into millimetre.

(f) In the case of tape measures of nominal length above 5 m, every graduation line at 50 mm shall have the same length as the graduation line at 10 mm but may have an arrow at its end. This requirement shall not apply to tape measures graduated at every millimetre.

(g) The thickness of the graduation lines shall not exceed the following limits :

0.4 mm in the case of Class I and Class II tape measures, and 0.5 mm in the case of Class III tape measures.

(h) In the case of tape measures of nominal length 0.5 m to 5 m, the graduation lines

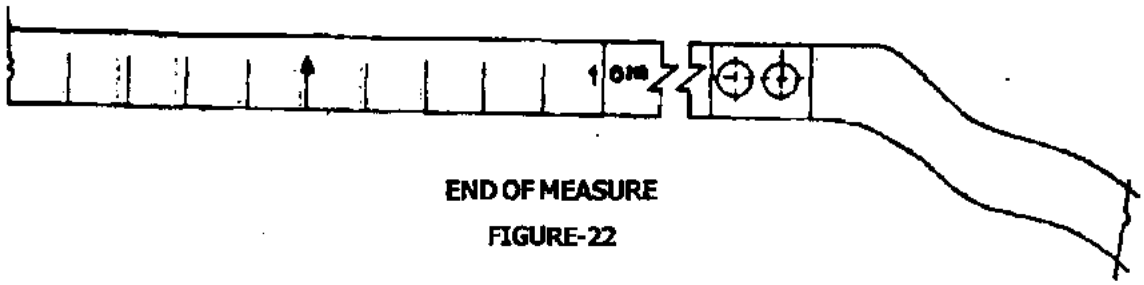

END OF MEASURE

FIGURE-22

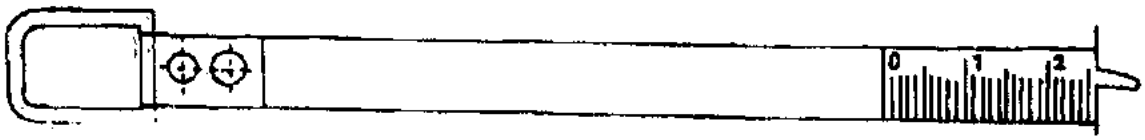

MEASURE WITH ZERO AWAY FROM RING

FIGURE-23

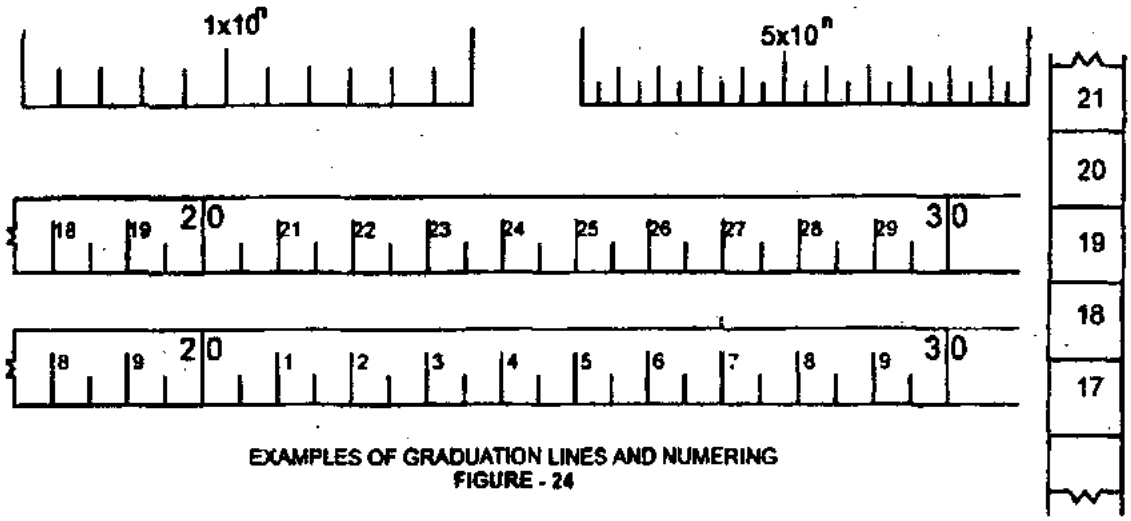

EXAMPLES OF GRADUATION LINES AND NUMERING
FIGURE - 24

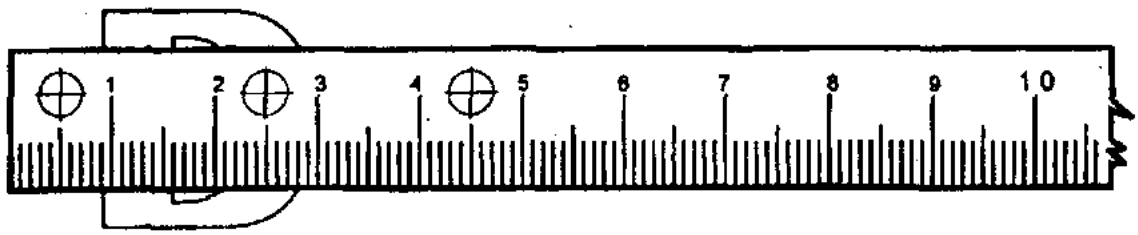

ILLUSTRATION OF A MEASURE COMMENCING WITH ZERO
FIGURE 25

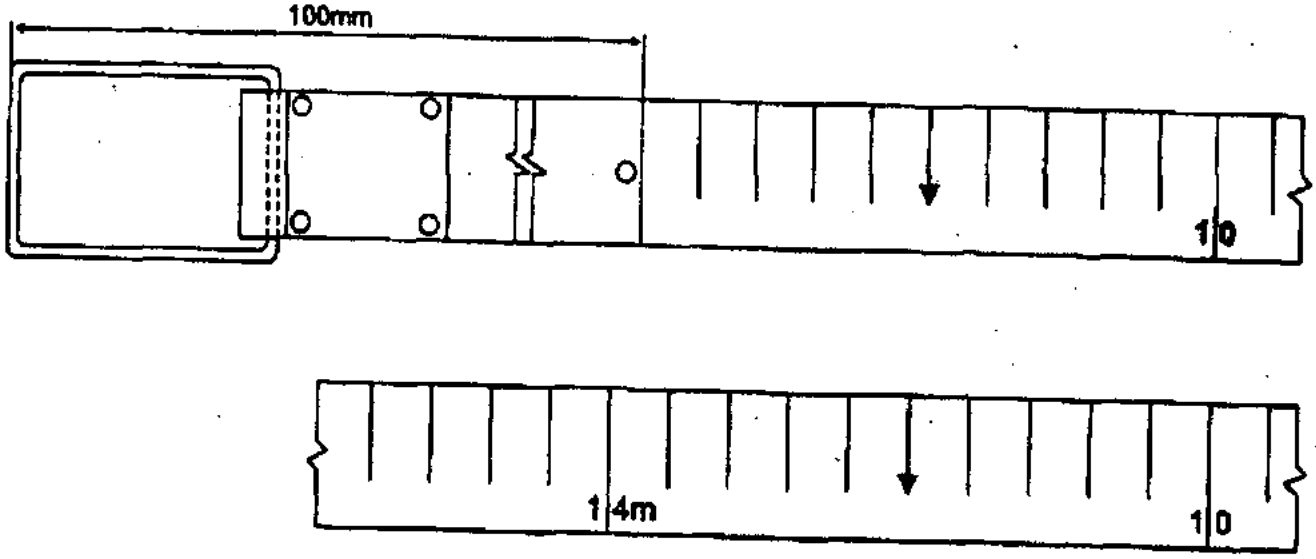

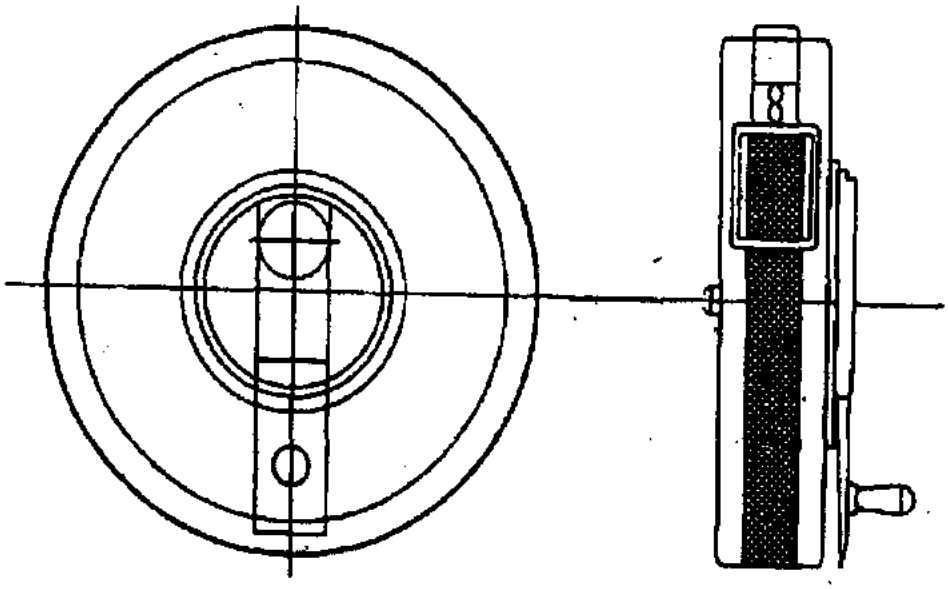

ILLUSTRATION OF LONG MEASURE OF FABRIC OR GLASS FIBRE AND CONTAINER
FIGURE-26

474 GI/11—94

may have a length between one-fourth and full width of the tape, depending upon convenience. In the case of tape measures of nominal length above 5 m, the length of the graduation lines may be as follows :—

(i) for millimetre graduation lines, about one-third of the width of the tape;

(ii) for 5 millimetre graduation lines, about half the width of the tape;

(iii) for 10 millimetre graduation lines, about two-thirds the width of the tape; and

(iv) for 100 millimetre graduation lines and for metre graduation lines as well as for the zero graduation lines, equal to the width of the tape.

7. *Numbering*

(a) *General requirements :*

(i) The numerals shall be indicated clearly, uniformly and indelibly and shall be easily and unambiguously legible.

(ii) The places, dimensions, shape, colour and contrast of the numerals shall be suitable for the scale and graduation lines to which they relate.

(iii) The numerals shall be marked parallel to or perpendicular to the axis of the tape measure depending upon the intended manner of use of the measure.

(b) The following graduation lines shall be numbered :

10 mm, for tape measure of nominal length 0.5 to 5 m, 100 mm for tape measure of nominal length exceeding 5 m.

(c) The metre graduation lines shall be numbered and accompanied by the symbol 'm' and if required "मी"

Note : The abbreviation "मी" may be indicated in the regional script.

(d) In the case of the tape measure of nominal length of 0.5 m to 5 m, the height of the numerals shall be such as would facilitate the reading of the measurement without ambiguity.

(e) In the case of tape measures of nominal length 5 m and above, after the graduation line at one metre, every graduation line at 100 mm may be marked with an additional numeral indicating the completed number of metres. This numeral, if provided, may be located just above or in line with the numeral of the 100 mm graduation line. The height of this numeral may be approximately half the height of the numerals indicating 100 mm.

(f) In the case of tape measures of nominal length 5 m and above the height of the numerals, except those given in sub-clause (e) of clause 7 may be :

(i) about 1/3 of the width of the tape, for 10 mm graduation lines,

(ii) about 1/2 of the width of the tape, for 100 mm graduation lines, and

(iii) about 2/3 of the width of the tape, for metre graduation lines.

(g) If tapes of 0.5 m to 5 m are contained in special container may be marked with its dimension, for example, 50 mm, to facilitate measurement of internal dimensions.

8. *Maximum permissible error*

(a) On verification, under the conditions specified in clause 2, the error on the length between the axis of any two graduation lines shall not exceed :

for Class I $\pm$ (0.1 + 0.1L) mm,

for Class II $\pm$ (0.3 + 0.2L) mm, and

for Class III $\pm$ (0.6 + 0.4L) mm,

where L is length between two graduation lines concerned, expressed in metres, rounded off to the next higher whole number of metres.

(b) The maximum permissible error on tape measures on inspection shall be twice that specified for verification, the method of verification remaining unchanged.

(c) Steel tape measures of nominal length 0.5 m to 5 m shall belong to accuracy Class I or Class II.

(d) Tape measures of nominal length above 5 m shall belong to accuracy Class I, Class II or Class III.

9. Markings

(a) The steel tape measures shall be marked at a suitable place near the end and on the container, where provided with the following markings :

(i) nominal length in metre,

(ii) an indication of the location of the zero of the scale,

(iii) the manufacturer's name or trade mark or both,

(iv) class of accuracy : I, II or III in an oval,

(v) model approval number issued by the Central Government.

(b) The inscriptions shall be clearly visible and legible.

(c) Advertising inscriptions, if made, shall be carried out in such a manner that they do not intrude in any way with the use of the tape measure.

10. Sealing

The stamp of verification shall be affixed on the metal, plastic, leather or other strip provided at the beginning of the tape measure.

PART VIII - SURVEYING CHAINS

1. General

This Part deals with link type surveying chains of 20 m and 30 m lengths for land measurement.

2. Definitions

(a) Surveying chain—An instrument for measuring the surface distance between two points.

(b) Length of chain—The distance between the outside edges of the handles when fully stretched.

(c) Tallies—Metallic tags or indicators of distinctive pattern fixed at (various points) of the chain, to facilitate quick reading of fractions of a chain.

3. Material

The different components of the chains shall be made from the materials mentioned against each.

Components	*Material*
Handle	Brass Castings
Eye Bolt Collar	Brass suitable for free cutting and high speed machine work
Ring Link, Small Link, Large	Galvanised mild steel wire 4 mm.
Link, Connecting	
Tally Indicating ring	Brass sheet or galvanized sheet Brass wire

4. Constructional details

(a) The nomenclature of the different parts of the chain and their dimensions shall be as indicated in Figure 27, 28 & 29.

(b) The tallies shall be fixed at every fifth metre

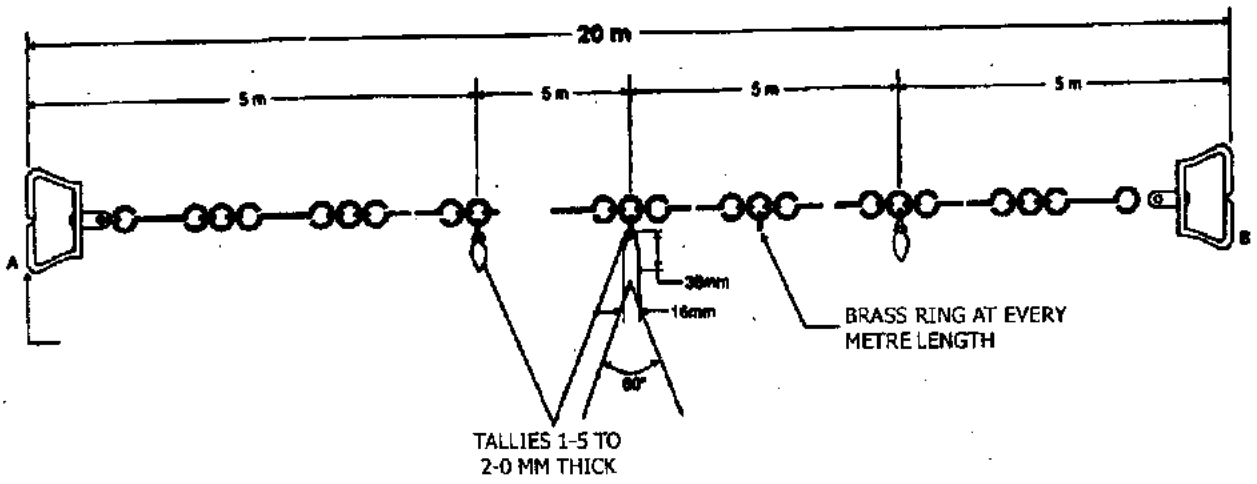

20-METRE CHAIN
FIGURE-27

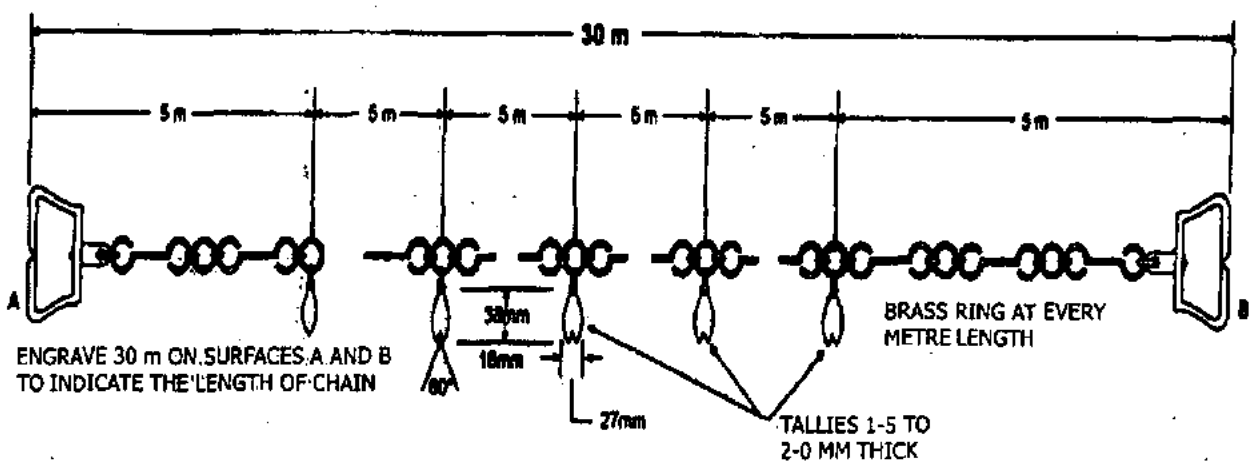

30-METRE CHAIN
FIGURE-28

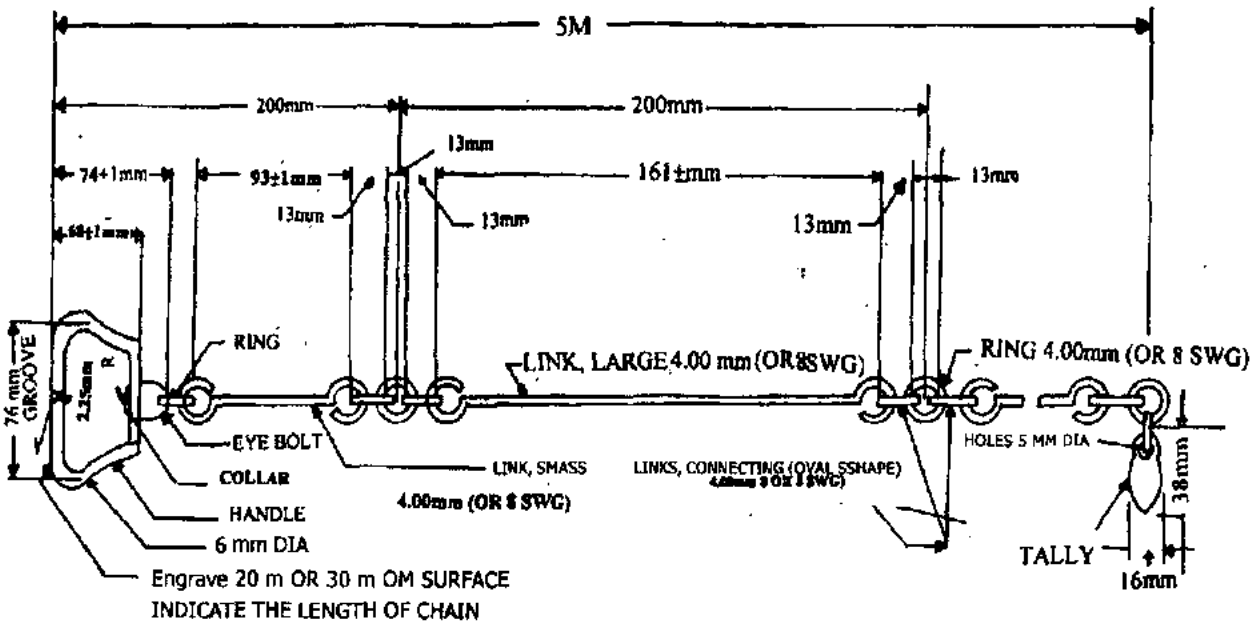

NOMENCLATURE AND DETAILS OF 5 m LENGTH AT THE BEGINNING AND END OF SURVEYING CHAIN
FIGURE-29

along the chain. Small rings shall be fixed at every metre, except where tallies are attached. Tallies shall have distinctive shapes depending on their position in the chain as shown in Figure 27 and 28.

(c) Connecting links between two large links shall be oval in shape, the central one being a circular ring.

(d) To facilitate holding the arrows (chain pains) in position with the handle of the chain, a groove shall be cut on the outside surface of the handle as shown in Figure 29. The radius of the groove shall correspond to the radius of the arrows.

(e) The handle joint shall have flexibility in order that it may be possible to swivel the handle round the eye bolt. A swivel may also be provided at the middle of the chain.

5. Permissible error

(a) When measured with a tension of 80 newtons every metre length shall be correct with an error not exceeding ± 2 mm.

The overall length of the chains shall be correct within the following limits of error :

20 metre chains ± 5mm

30 metre chains ± 8 mm

(b) The permissible errors shall be the same for verification and inspection.

Explanation : Nominal distance between the centres of the circular links containing the small rings or tallies shall define the distance.

6. Marking

(a) The tallies used for marking the distances in chain shall be marked with letters 'मी' and 'm' (See Figure 29).

(b) The length of the chain, 20 m or 30 m, as the case may be, shall be indelibly marked over the handle (See Figure 29).

(c) The chains shall be indelibly marked, on the reverse side of the surface of the handle having the denominations with the manufacturer's name or trade mark.

Note : The abbreviation मी may be indicated in the regional script.

7. Provision for stamping

A metal label or disc shall be permanently attached to the handled at the beginning of each chain for the verification of stamp.

PART IX-TAPES FOR USE IN MEASUREMENT OF OIL QUANTITIES

1. General

This Part covers the requirements of tape with the dip weight attached to it and to be used in gauging petroleum, petroleum products and other oils.

2. Definitions

A dip tape shall mean essentially a graduated steel tape in one continuous length used in conjunction with a dip weight.

3. Denominations

The tape shall be of the denominations 5, 10, 15, 20, 25 and 50 metres.

4. Material

(a) Tape—The steel used shall have a minimum tensile strength of 1500 M Pa.

(b) Dip weights or dip bobs—The dip weights shall be made of brass or other non-sparking or low sparking material, sufficiently hard to resist damage by contact with steel.

5. Dip tape

(a) *The dip tape shall be of the following dimensions :*

Width : 13 mm or 16 mm

Thickness : Between 0.20 and 0.30 mm

Length : One continuous piece of sufficient length for the purpose required. The tape shall be longer than the distance between the dip reference point and the bottom of the container.

(b) *Graduations*

(i) The tape shall be marked legibly and indelibly on one side only with a line at every millimetre or five millimetres, centimetre, decimetre and metre. The height of marking lines shall be as follows :

Unit of graduation	*Approximate height of graduation mm*
Millimetre	4
Five millimetres	6
Centimetre	8
Decimetre	Full width of the tape
Metre	Full width of the tape

(c) The tape shall be so made that it is capable of being wound on a drum and held in a winding frame or case.

(d) The free end of the tape shall be fitted with the dip weight or arrangements provided for attaching the dip weight.

6. Dip weights

(a) Dip weights shall be of two types, light and heavy, and shall be of cylindrical torpedo shape. The dimensions for light and heavy dip weights shall be as shown in Figure 30.

(b) The light type may either be fixed permanently to the tape or attached separately to it by any suitable device.

(c) The heavy type shall be attached to the tape by a swivel hook (See Figure 31).

474 46/11-95

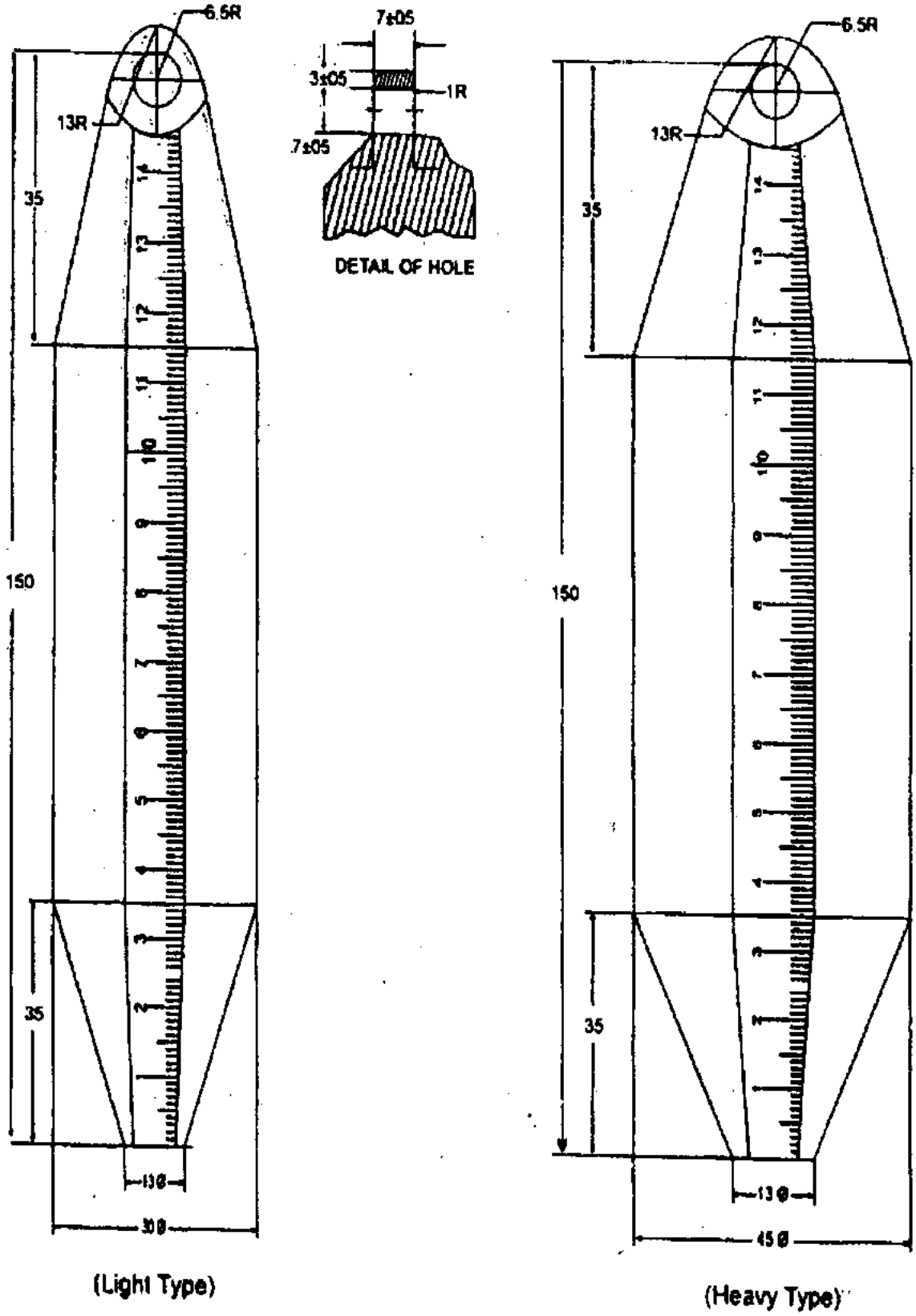

All dimensions in millimetres
LIGHT AND HEAVY DIP WEIGHT
FIGURE- 30

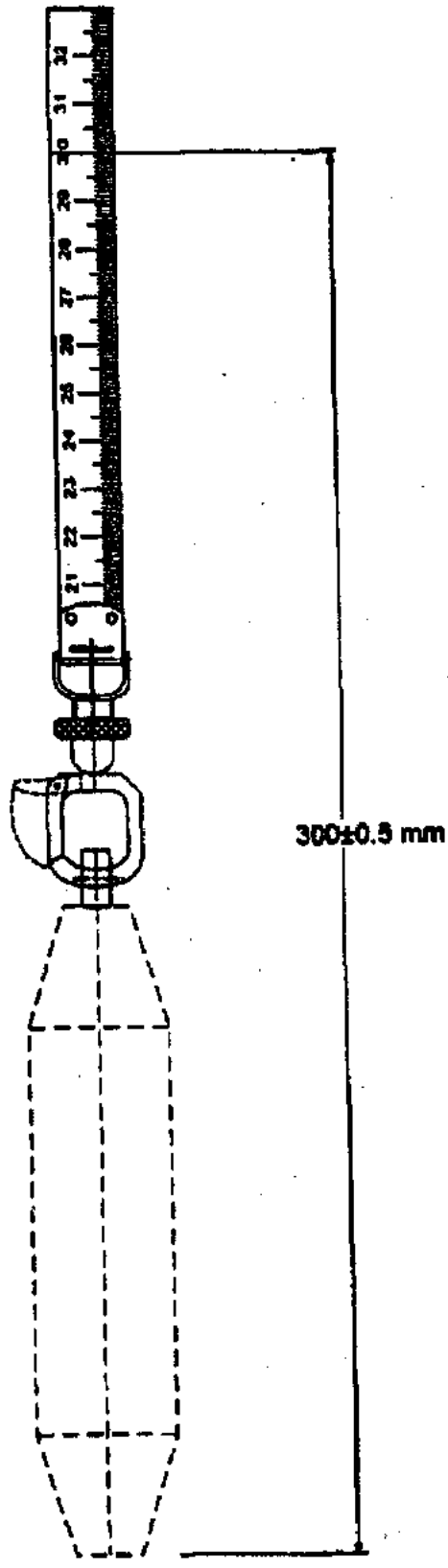

SWIVEL HOOK ATTACHMENT
FIGURE-31

(d) The dip weight shall have the lengths of graduation and weights given below :

	Light	*Heavy*
Length of graduations	150 mm	150 mm
from bottom weight	700 ± 50 g	1500 ± 50 g

(e) The dip weight shall be graduated in a manner similar to the tape.

(f) The graduations on the dip weight shall begin from its bottom and shall be carried over in such a manner that when the dip weight is attached to the tape the graduations are continuous from the weight to the tape.

7. Permissible error

The error in the length of the tape supported on horizontal surface with a tension of 50 newtons shall not exceed the following limits :

(a)	Between any two adjoining mm and cm lines	Not more than ± 0.2 mm
(b)	Between any two adjoining decimetre and metre lines	Not more than ± 0.4 mm
(c)	From zero to the points specified below :	
	(i) One metre mark	± 0.4 mm
	(ii) Two metre mark	± 0.6 mm
	(iii) Five metre mark	± 1.0 mm
	(iv) Any metre mark beyond the first five metres	± 1.0 mm for the first five metres plus 0.5 mm for each additional five metres or part thereof subject to a maximum error of 2.0 mm.

8. Marking

(a) Every centimetre, decimetre and metre shall be marked with International form of Indian numerals. The decimetre and metre numerals shall be in bold type. The metre divisions shall, in addition, bear the designation 'मी' or 'm' or both. The end of the tape measure shall be marked with word 'मीटर' or 'metre' or both.

(b) On the ungraduated side and on the case of each tape and also on the dip weight, the name or trade-mark of the manufacturer and the denominations shall be legibly marked. In addition, direction of winding shall also be legibly marked on the case or reel. Suitable provisions shall be made for Legal Metrology Officer's stamps on the dip weight and the tape.

(c) Every dip weight and dip tape shall be suitably marked to identify them with each other.

Note : The word 'मीटर' and abbreviation 'मी' may be indicated in the regional script.

SEVENTH SCHEDULE - HEADING - A

[See Rule 13]

SPECIFICATION FOR NON-AUTOMATIC WEIGHING INSTRUMENTS

PART I

TERMINOLOGY

1. General definitions

(1) Weighing instrument

Measuring instrument that serves to determine the mass of a body by using the action of gravity on this body.

The instrument may also be used to determine other quantities, magnitudes, parameters or characteristics related to mass.

According to its method of operation, a weighing instrument is classified as an automatic or non-automatic instrument.

(2) Non-automatic weighing instrument

Instrument that requires the intervention of an operator during the weighing process, for example to deposit on or remove from the receptor, the load to be measured and also to obtain the result.

The instrument permits direct observation of the weighing results, either displayed or printed; both possibilities are covered by the word "indication".

Note : Terms such as "indicate", "indicating component" and their derivatives do not include printing.

A non-automatic weighing instrument may be

—graduated or non-graduated,

—self-indicating, semi-self-indicating or non-self indicating.

Note : In this specification, a non-automatic weighing instrument is called an "instrument".

(i) *Graduated instrument*

Instrument allowing the direct reading of the complete or partial weighing result.

(ii) *Self-indicating instrument*

Instrument in which the position of

equilibrium is obtained without the intervention of an operator.

(iii) *Semi-self indicating instrument*

Instrument with a self-indication weighing range, in which the operator intervenes to alter the limits of this range.

(iv) *Electronic instrument*

Instrument equipped with electronic devices.

(v) *Instrument with price scales*

Instrument that indicates the price to pay by means of price charts or scales related to a range of unit prices.

(vi) *Price computing instrument*

Instrument that calculates the price to pay on the basis of the indicated mass and the unit price.

(vii) *Price-labelling instrument*

Price computing instrument that prints the weight value, unit price and price to pay for pre-packages.

(viii) *Self-service instrument*

Instrument that is intended to be operated by the customer.

(3) Indication provided by an instrument

(i) Printing indication

Indication, signals and symbols that are subject to requirements of this specification

(ii) Indication, signals and symbols that are not primary indications.

2. Construction of an instrument

In this specification the term "device" is used for any means by which a specific function is performed, irrespective of the physical realization, e.g. by a mechanism or a key initiating an operation; the device may be a small part or a major portion of an instrument.

(1) Main device

(i) *Load receptor or pan*

Part of the instrument intended to receive the load.

(ii) *Load transmitting device*

Part of the instrument for transmitting the force produced by the load acting on the load receptor, to the load-measuring device.

(iii) *Load-measuring device*

Part of the instrument for measuring the mass of the load by means of an equilibrium device for balancing the force coming from the load transmitting device, and an indicating or printing device.

(2) Module

Part of an instrument which performs a specific function, can be examined separately and is subject to specified partial error limits.

(3) Electronic parts

(i) *Electronic device*

A device employing electronic subassembly and performing a specific function. An electronic device is usually manufactured as a separate unit and can be independently tested.

Note : An electronic device, as defined above, may be a complete instrument (e.g. instrument for direct sales to the public) or parts of an instrument (e.g. printer, indicator).

(ii) *Electronic sub-assembly*

A part of an electronic device, employing electronic components and having a recognizable function of its own. (e.g. A/D converter, display matrix).

(iii) *Electronic component*

The smallest physical entity that uses electron or hole conduction in semi-conductors, gases or in a vacuum.

(4) Indication device (of a weighing instrument)

Part of the load measuring device on which the direct reading of the result is obtained.

(i) *Indicating component*

Component indicating the equilibrium and/or the result on an instrument with one position of equilibrium it indicate only the equilibrium (so-called zero).

On an instrument with several positions of equilibrium it indicates both the equilibrium and the result. On an electronic instrument, this is the display.

(ii) *Scale mark*

A line or other mark on an indicating component corresponding to a specified value of mass.

(iii) *Scale base*

An imaginary line though the centres of all the shortest scale marks.

474 G/11-96

(5) Auxiliary indicating devices

(i) *Device for interpolation of reading (Vernier)*

Device connected to the indicating element and sub-dividing the scale of an instrument, without special adjustment.

(ii) *Complementary indicating device*

Adjustable device by means of which it is possible to estimate, in units of mass, the value corresponding to the distance between a scale mark and the indicating component.

(iii) *Indicating device with a differentiated scale division*

Digital indicating device of which the last figure after the decimal sign is clearly differentiated from other figures.

(6) Extended indicating device

A device temporarily changing the actual scale interval (d) to a value less than the verification scale interval (e) following a manual command.

(7) Supplementary devices

(i) *Levelling device*

Device for setting an instrument to its reference position.

(ii) *Zero setting device*

Device for setting the indication to zero when there is no load on the load receptor.

(a) *Non automatic zero setting device*

Device for setting the indication to zero by an operator.

(b) *Semi automatic zero setting device*

Device for setting the indication to zero automatically following a manual control.

(c) *Automatic zero-setting device*

Device for setting the indication to zero automatically without the intervention of an operator.

(d) *Initial zero-setting device*

Device for setting the indication to zero automatically at the time the instrument is switched on and before it is ready for use.

(iii) *Zero tracking device*

Device for maintaining the zero indication within certain limits automatically.

(iv) *Tare device*

Device for setting the indication to zero when a load is on the load receptor; without altering the weighing range for net loads (additive tare device); or

reducing the weighing range for net loads (subtractive tare device).

It may function as:

a non-automatic devices (load balanced by an operator);

a semi-automatic device (load balanced automatically following a single manual command);

an automatic device (load balanced automatically without the intervention of an operator).

(a) *Tare balancing device* : Tare device without indication of the tare value when the instrument is loaded.

(b) *Tare weighing device* : Tare device that stores the tare value and is capable of indicating or printing it whether or not the instrument is loaded.

(v) *Preset tare device*

Device for subtracting a preset tare value from a gross or net weight value and indicating the result of the calculation. The weighing range for net loads is reduced accordingly.

(vi) *Locking device*

Device for immobilizing all or part of the mechanism of an instrument.

(vii) *Auxiliary verification device*

Device permitting separate verification of one or more main devices of an instrument.

(viii) *Selection device for load receptors and load measuring devices*

Devices for attaching one or more load receptors to one or more load measuring devices, whatever intermediate load transmitting device are used.

(ix) *Indication stabilizing device*

Device for maintaining a stable indication under given conditions.

3. Metrological characteristics of an instrument

(1) Weighing capacity (Max)

(I) Maximum weighing capacity, not taking into account the additive tare capacity.

(ii) *Minimum capacity (Min)*

Value of the load below which the weighing results may be subject to an excessive relative error.

(iii) *Self-indication capacity*

Weighing capacity within which equilibrium is obtained without the intervention of an operator.

(iv) *Weighing range*

Range between the minimum and maximum capacities.

(v) *Extension interval of self-indication*

Value by which it is possible to extend the range of self-indication within the weighing range.

(vi) *Maximum tare effect (T= + ..., T = -...)*

Maximum capacity of the additive tare device or the subtractive tare device.

(vii) *Maximum safe load (Lim)*

Maximum static load that can be carried by the instrument without permanently altering its metrological qualities.

(2) Scale divisions

(i) *Scale spacing (instrument with analogue indication)*

Distance between any two consecutive scale marks, measured along the scale base.

(ii) *Actual scale interval (d)*

Value expressed in units of mass of,—

the difference between the values corresponding to two consecutive scale marks, for analogue indication, or

the difference between two consecutive indicated values, for digital indication.

(iii) *Verification scale interval (e)*

Value expressed in units of mass, used for the classifications and verification of an instrument.

(iv) *Scale interval of numbering*

Value of the difference between two consecutive numbered scale marks.

(v) *Number of verification scale intervals (single interval instrument)*

Quotient of the maximum capacity and the verification scale interval:

n= Max/e

(vi) *Multi-interval instrument*

Instrument having one weighing range which is divided into partial weighing ranges each with different scale intervals, with the weighing range determined automatically according to the load applied, both on increasing and decreasing loads.

(vii) *Multiple range instrument*

Instrument having two or more weighing ranges with different maximum capacities and different scale intervals for the same load receptor, each range extending from zero to its maximum capacity.

4. Metrological properties of an instrument

(1) Discrimination

Ability of an instrument to react to small variation of load.

The discrimination threshold, for a given load, is the value of the smallest additional load that, when gently deposited on or removed from the load receptor causes a perceptible change in the indication.

(2) Repeatability

Ability of an instrument to provide results that agree one with the other when the same load is deposited several times and in a practically identical way on the load receptor under reasonably constant test conditions.

(3) Durability

Ability of an instrument to maintain its performance characteristics over a period of use.

(4) Warm-up time

The time between the moment power is applied to an instrument and the moment at which the instrument is capable of complying with requirements.

5. Indications and errors

(1) Methods of indication

(i) *Balancing by weights* :

Value of metrological controlled weights that balance the load (taking into account the reduction ratio of the load).

(ii) *Analogue indication* :

Indication enabling the evaluation of the equilibrium position to a fraction of the scale interval.

(iii) *Digital indication* :

Indication in which the scale marks are composed of a sequence of aligned figures that do not permit interpolation to fractions of the scale interval.

(2) Weighing results

Note : The following definitions apply only when the indication has been zero before the load has been applied to the instrument.

(i) *Gross value (G)* :

Indication of the weight of a load on an instrument, with no tare or preset tare device in operation.

(ii) *Net value (N)* :

Indication of the weight of a load on an instrument after operation of a tare device.

(iii) *Tare value (T)* :

The weight value of a load, determined by a tare weighing device.

(3) Other weight values

(i) *Preset tare value (PT)* :

Numerical value, representing a weight that is introduced into the instrument.

"Introduced" includes such as keying in, recalling from a data storage, or inserting via an interface.

(ii) *Calculated net value* :

Value of the difference between a gross or net weight value and a preset tare value.

(iii) *Calculated total weight value* :

Calculated sum of more than one weight value and/or calculated net value.

(4) Reading

(i) *Reading by simple juxtaposition*

Reading of the weighing result by simple juxtaposition of consecutive figures giving the weighing result, without the need of calculation.

(ii) *Overall inaccuracy of reading*

The overall inaccuracy of reading of an instrument with analog indication is equal to the standard deviation of the same indication, the reading of which is carried out under normal conditions of use by several observers.

It is customary to make at least ten readings of the results.

(iii) *Rounding error of digital indication*

Difference between the indication and the result the instrument would give with analog indication.

(iv) *Minimum reading distance*

The shortest distance that an observer is able to freely approach the indicting device to take a reading under normal conditions of use.

This approach is considered to be free for the observer if there is a clear space of at least 0.8 m in front of the indicting device. (See figure 32 A)

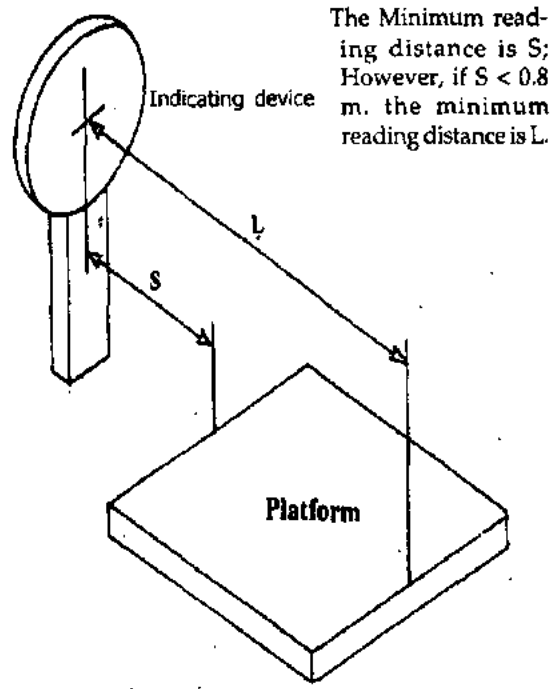

FIGURE- 32 A

(5) Errors

(See Figure 32 B for illustration of certain terms used)

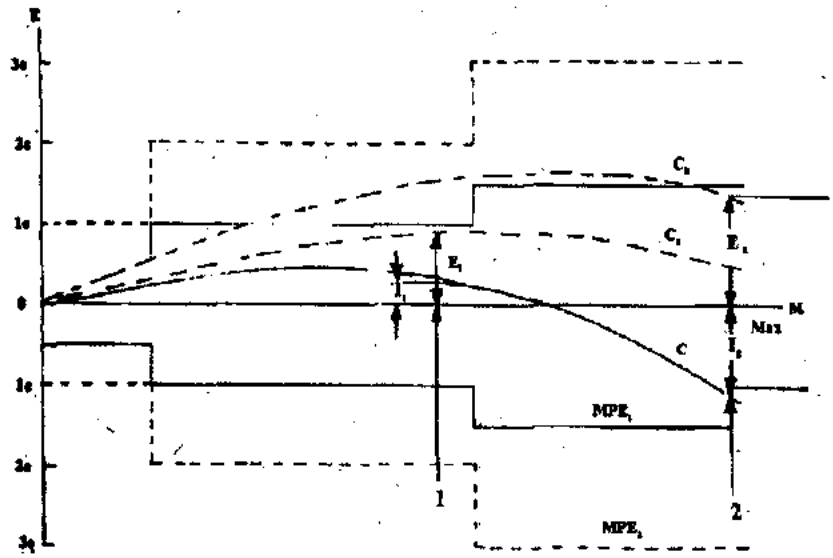

FIGURE-32 B

Illustration of certain terms used

M = mass to be measured

E = error of indication

MPE_1 =maximum permissible error on verification

MPE_2 =maximum permissible error in service (inspection)

C = characteristic under reference conditions

C_1 = characteristic due to influence factor or disturbance

C_2 =characteristic after durability tests

I_i = intrinsic

DE= durability error

Situation 1 : Shows the error E_1 of an instrument due to an influence factor or a disturbance, I_1 is the intrinsic error. The fault due to the influence factor or disturbance applied equals E_1 minus I_1.

Situation 2 : Shows the error E_2 of an instrument after the durability test. I_2 is the initial intrinsic error. The durability error equals E_2 minus I_2.

(i) *Error (of indication)*

The indication of an instrument minus the (conventional) true value of the mass.

(ii) *Intrinsic error*

The error of an instrument under reference conditions.

(iii) *Initial intrinsic error*

The intrinsic error of an instrument as determined prior to the performance and span stability tests.

(iv) *Maximum permissible error*

Maximum difference, positive or negative, allowed by regulation between the indication of an instrument and the corresponding true value, as determined by reference standard masses, with the instrument being at zero at no-load, in the reference position.

(v) *Fault*

The difference between the error or indication and the intrinsic error of an instrument.

Note : Principally, a fault is the result of an undesired change of data contained in or flowing through an electronic instrument.

(vi) *Significant fault*

A fault greater than *e*.

Note : For a multi-interval instrument, the value of *e* is that appropriate to the partial weighing range.

The following are not considered to be significant faults, even when they exceed *e* :

- Faults arising from simultaneous and mutually independent causes in the instrument.
- Faults implying the impossibility to perform any measurement.
- Faults being so serious that they are bound to be noticed by all those interested in the result of measurement.

474.60/11-97

- Transitory faults being momentary variations in the indication which cannot be interpreted, memorized or transmitted as a measuring result.

(vii) *Durability error*

The difference between the intrinsic error over a period of use and the initial intrinsic error of an instrument.

(viii) *Significant durability error*

A durability error greater than *e*.

Note 1 : A durability error can be due to mechanical wear and tear or due to drift and aging of electronic parts. The concept of significant durability error applies only to electronic parts.

Note 2 : For a multi-interval instrument, the value of *e* is that appropriate to the partial weighing range.

The following are not considered to be significant durability error, even when they exceed *e* :

Errors occurring after a period of instrument use that are clearly the result of a failure of a device/ component, or of a disturbance and for which the indication :

- cannot be interpreted, memorized, or transmitted as a measurement result/or
- implies the impossibility to perform any measurement, or
- is so obviously wrong that it is bound to be noticed by all those interested in the results of measurement.

(ix) *Span stability*

The capacity of an instrument to maintain the difference between the indication of weight at maximum capacity and the indication at zero over period of use within specified limits.

6. Influence and reference conditions

(1) Influence quantity

A quantity that is not the subject of the measurement but which influences the values of the measure and or the indication of the instrument.

(i) *Influence factor*

An influence quantity having a value within the specified rated operating conditions of the instrument.

(ii) *Disturbance*

An influence quantity having a value within the limits specified in this specification but outside the specified rated operating conditions of the instrument.

(2) *Rated operating conditions*

Conditions of use, giving the range of values of influence quantities for which the metrological characteristics are intended to lie within the specified maximum permissible errors.

(3) *Reference conditions*

A set of specified values of influence factors fixed to ensure valid inter-comparison of the results of measurements.

(4) *Reference position*

Position of the instrument at which its operation is adjusted.

7. Performance test

A test to verify whether the equipment under test (EUT) is capable of performing its intended functions.

PART II

NON-AUTOMATIC WEIGHING INSTRUMENTS

1. Scope

This specification specifies the metrological and technical requirements for non-automatic weighing instruments and will not be applicable to the following non-graduated instruments :

(1) Beam scale

(2) Counter machine

2. Principles involved

(1) Units of measurement

(i) The units of mass to be used on an instrument shall be the kilogram (kg) the milligram (mg), the gram (g) and tonne (t).

(ii) For special application e.g. trade with precious stones, the metric carat (1 carat = 0.2 g) may be used as unit of measurement. A symbol for the carat shall be "c".

(2) Metrological requirements

The requirements apply to all instruments irrespective of their principles of measurement.

Instruments are classified according to:

- the verification scale interval,
- the number of verification scale intervals.

The maximum permissible errors are in the order of magnitude of the verification scale interval.

A minimum capacity (Min) is specified to indicate that the instrument should not be used for measuring loads below that limit.

3. Metrological requirements

(1) Principles of classification

(i) *Accuracy classes*

The accuracy classes for instrument and their symbols shall be as given in Table 15.

TABLE 15

Class	*Symbol*
Special accuracy	I
High accuracy	II
Medium accuracy	III
Ordinary accuracy	IV

(2) Verification scale interval

(i) *Verification scale interval shall be in the form*

1×10^k, 2×10^k, 5×10^k

k being a positive or negative whole number or equal to zero.

(ii) The verification scale interval for different types of instruments shall be as given in Table 16.

TABLE 16

Type of instrument	*Verification scale interval*
Graduated, without auxiliary indicating device	e = d
Graduated, with auxiliary indicating device	*e* is chosen by the manufacturer according to requirement in sub-paragraph (3) and clause (iii) of sub-paragraph (5) of this paragraph.
Non-graduated	*e* is chosen by the manufacturer according to sub-paragraph (3) of this paragraph.

(3) Classification of instruments

(I) The verification scale interval, number of verification scale intervals and the minimum capacity, in relation to the accuracy class of an instrument, shall be as given in Table 17.

TABLE 17

Accuracy class	*Verification scale interval e*	*Number of verification scale intervals n = Max/e*		*Minimum capacity*
		minimum	*maximum*	
Special I	0.001 g ≤ e	50 000*	—	100 e
High II	0.001 g ≤ *e* ≤ 0.05 g	100	100 000	20 e
	0.1 g ≤ e	5000	100 000	50 e
Medium III	0.1 g ≤ e ≤ 2 g	100	10 000	20 e
	5 g ≤ e	500	10 000	20 e
Ordinary IV	5 g ≤ e	100	1000	10 e

Note : For values of 'e' less than 1 mg in respect of class I accuracy instruments, *e* shall be taken to be equal to 1 mg for the purpose of verification/inspection.

See for exception in clause (v) of sub-paragraph (5) of this paragraph.

(ii) On multiple range instruments, if the verification scale intervals are e_1, e_2.... e_r with $e_1 < e_2 < ... < e_r$, Min, n and Max shall be indexed accordingly.

(iii) On multiple range instruments each range shall be treated as an instrument with one range.

(iv) For special application that are clearly marked on the instrument, an instrument may have weighing ranges in classes I and II or in classes II and III. The instrument as a whole shall then comply with the more severe requirements of sub-paragraph (9) of this paragraph applicable to either of the two classes.

(4) Additional requirements for a multi-interval instrument

(I) *Partial weighing range*

Each partial range (index i = 1, 2...) shall be defined by:

—its verification scale intervals e_i, $e_{i+1} > e_i$

its maximum capacity Max_i

its minimum capacity $Min_i = Max_{(i-1)}$ (for i = 1 the minimum capacity is Min_1 = Min)

The number of verification scale intervals n for each partial range is equal to

$n_i = Max_i/e_i$

(ii) *Accuracy class*

e_i and n_i in each partial weighing range, and min_i shall comply with the requirements given in Table 40 according to the accuracy class of the instrument.

(iii) *Maximum capacity of partial weighing ranges*

With the exception of the last partial weighing range, the requirements in Table 18 shall be complied with, according to the accuracy class of the instrument.

TABLE 18

Class	*I*	*II*	*III*	*IV*
Max_i/e_i+1	≥ 50 000	≥ 5 000	≥ 500	≥ 50

(iv) *Instrument with a tare device*

Requirements concerning the ranges of a multi-interval instrument apply to the net load, for every possible value of the tare.

(5) Auxiliary indicating devices

(i) *Type and application*

Only instruments of classes I and II may be fitted with an auxiliary indicating device, which shall be,—

—a device with a rider, or

—a device for interpolation of reading, or

—a complementary indicating device (*) or

—an indicating device with a differentiated scale division (**).

These devices shall be permitted only to the right of the decimal sign.

(ii) A multi-interval instrument shall not be fitted with an auxiliary indicating device.

(iii) *Verification scale interval*

The verification scale interval e shall be determined by the expression

$d < e \leq 10\ d$***

such that $e = 1 \times 10^k$ kg, 2×10^k kg, 5×10^k kg

k being a positive or negative whole number, or zero. This condition shall not apply to an instrument of class I with d < 1 mg. In that case e shall uniformly be 1 mg.

***The value of e, calculated following this rule, are, for example,

TABLE 19

d =	0.1 g	0.2 g	0.5 g
e =	1 g	1 g	1 g

(i) Example of a complementary indicating device (*)

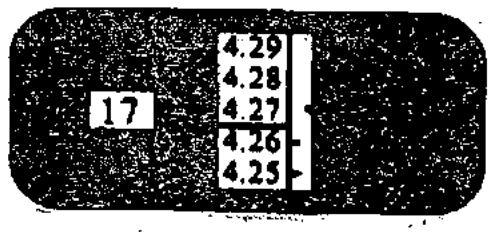

(ii) examples of indicating devices each with a differentiated scale division (**)

2 3, 4 5 g	last differentiated figure : 5 d = 0.01 g or 0.05 g e = 0.1 g
2 3, 4 8 g	last differentiated figure : 8 d = 0.01 g or 0.02 g e = 0.1 g

Figure 32-C Example of a auxillary indicating device

(iv) *Minimum capacity*

The minimum capacity of the instrument is determined in conformity with the requirements in Table 17.

(v) *Minimum number of verification scale intervals*

for an instrument of class I with d< 0.1 mg, n may be less than 50000.

(6) Maximum permissible errors

(i) *Values of maximum permissible errors on verification/reverification*

The maximum permissible errors allowed for increasing or decreasing loads shall be as given Table 20.

TABLE 20

Maximum permissible errors on verification/ re-verification	*For loads m expressed in verification scale intervals e*			
	Class I	*Class II*	*Class III*	*Class IV*
±0.5e	Min ≤ m ≤ 50 000	Min ≤ m £ 5000	Min ≤ m ≤ 500	Min ≤ m ≤ 50
±1e	50000< m ≤ 200000	5000 ≤ m ≤ 20 000	500 ≤ m ≤ 2000	50 < m ≤ 200
±1.5e	200000 < m	20000 <m ≤100000	2000 < m ≤ 10000	200 < m ≤ 1000

(ii) *Values of maximum permissible errors in inspection*

The maximum permissible errors during inspection shall be twice the maximum permissible errors allowed on verification.

(iii) *Basic rules concerning the determination of errors*

(a) Influence factors

Errors shall be determined under normal test condition. When the effect of one factor is being evaluated, all other factors are to be kept relatively constant, at a value close to normal.

(b) Maximum permissible errors for net values

The maximum permissible errors apply to the net value of the load for every possible tare load, except preset tare values

(c) Tare weighing device

The maximum permissible error for a tare weighing device is the same, for any tare value as those of the instrument, for the same value of load.

(7) Permissible difference between results

Regardless of what variation of results is permitted, the error of any single weighing result shall by itself not exceed the maximum permissible error for the given load.

(i) *Repeatability*

The difference between the maximum and minimum results of several weighings of the same load shall not be greater than the absolute value of the maximum permissible error for the given load.

(ii) *Eccentric loading*

The indications for different positions of a load shall meet the maximum permissible errors, when the instrument is tested according to sub-paragraphs (a) to (d) of this paragraph.

(a) Unless otherwise specified hereafter, a load corresponding to 1/3 of the sum of the maximum capacity and the corresponding maximum additive tare effect shall be applied.

(b) On an instrument with a load receptor having n points of support, with n>4, the fraction 1/(n-1) of the sum of the maximum capacity and the maximum additive tare effect shall be applied to each point of support.

(c) On an instrument with a load receptor subject to minimal off-centre loading (e.g. tank, hopper) a test load corresponding to one-tenth of the sum of the maximum capacity and the maximum additive tare effect shall be applied to each point or support.

(d) On an instrument used for weighing rolling loads (e.g. vehicle scale, rail suspension instrument) a rolling test load corresponding to the usual rolling load, the heaviest and the most concentrated one which may be weighted, but not exceeding 0.8 times the sum of the maximum capacity and the maximum additive tar effect, shall be applied at different points on the load receptor.

(iii) *Multiple indicating devices*

For a given load the difference between the indications of multiple indicating devices including tare weighing device, shall be not greater than the absolute value of the maximum permissible error, but shall be zero between digital indicating or printing devices.

(iv) *Different positions of equilibrium*

The difference between two results obtained for the same load when the method of balancing the load is changed (in the case of an instrument fitted with a device for extending the self-indication capacity) in two consecutive tests, shall not exceed the absolute value of the maximum permissible error for the applied load.

(8) Discrimination

(i) *Non-self indicating instrument*

An extra load equivalent to the value of the maximum permissible error for the applied load when gently placed or withdrawn from the instrument at equilibrium shall produce movement as required under sub-paragraph (1) of paragraph 6.

(ii) *Self or semi-self indicating instrument*

(a) Analogue indication

An extra load equivalent to the

474 GI/11-98

maximum permissible error for applied load when placed gently on or withdrawn from the instrument at equilibrium shall cause a permanent displacement of the indicating element corresponding to not less than 0.7 times the extra load.

(b) Digital indication

An additional load equal to 1.4 times the actual, scale interval, when gently placed on or withdrawn from the instrument at equilibrium shall change the initial indication.

(9) Variation due to influence quantities and time

An instrument shall comply, unless otherwise specified, with sub-paragraphs (6), (7) and (8) of this paragraph under the conditions of (ii) and (iii) of sub-paragraph (9) of this paragraph and additionally it shall comply with clauses (i) and (iv) of sub-paragraph (9) of this paragraph.

(i) *Tilting*

(a) For instrument of class II, III or IV liable to be tilted, the influence of tilting shall be determined under the effect of a lengthwise or transverse tilting equal to 2/1000 or corresponding to the limiting value of tilting marked on, or indicated by a level indicator, whichever is the greater tilt.

The absolute value of the difference between the indication of the instrument in its reference position (not tilted) and the indication in the tilted position shall not exceed:

— at no load, two verification scale intervals, (the instrument having first been adjusted to zero at no load in its reference position) except instruments of class II.

— at self indication capacity and at maximum capacity, the maximum permissible error (the instrument having been adjusted to zero at no load both in the reference and in the tilted position).

An instrument shall be fitted with a levelling device and a level indicator fixed firmly on the instrument in a place clearly visible to the user, unless the instrument is:

freely suspended, or

installed in a fixed position, or

complying with the requirements on tilting when tilted to 5% in any direction.

The limiting value of the level indicator shall be obvious, so that tilting is easily noticed.

Note : Limiting value of tilting : Displacement of 2 mm from a central position.

(b) On a class I instrument, the limiting value of tilting shall correspond to a tilt of no more than 2/1000 otherwise the instrument shall meet the requirement for instruments of class II.

(ii) *Temperature*

(a) Prescribed temperature limits

If no particular working temperature is stated in the descriptive markings of an instrument, this instrument shall maintain its metrological properties within the following temperature limits:

$-10^{o}C + 40^{o}C$

(b) Special temperature limits

An instrument for which particular limits of working temperature are stated in the descriptive markings shall comply with the metrological requirements within those limits.

The limits may be chosen according to the application of the instrument.

The ranges within those limits shall be at least equal to:

5 °C for instruments of class (I)

15 °C for instruments of class (II)

30 °C for instruments of class (III) and (IV)

(c) Temperature effect on no-load indication

The indication at zero or near zero shall not vary by more than one verification scale interval for a difference in ambient temperature of 1°C for instruments of class (I) and 5°C for other classes.

For multi-interval instruments and for multiple range instruments this applies to the smallest verification scale interval of the instrument.

(iii) *Mains power supply*

An instrument operated from a mains

power supply shall comply with the metrological requirements if the power supply varies:

in voltage from :–15% to+10% of the value marked on the instrument,

in frequency : from–2% to+2% of the value marked on the instrument, if alternate current is used.

(iv) *Time*

Under reasonably constant environmental conditions, an instrument of class I, II or III shall meet the following requirements.

(a) When any load is kept on the instrument, the difference between the indication obtained immediately after placing a load and the indication observed during the following 30 minutes, shall not exceed 0.5 *e*. However, the difference between the indication obtained at 15 minutes and after that at 30 minutes shall not exceed 0.2 *e*.

If these conditions are not met, the difference between the indication obtained immediately after placing a load on the instrument and the indication observed during the following four hours shall not exceed the absolute value of the maximum permissible error at the load applied.

(b) The deviation on returning to zero as soon as the indication has stabilized, after the removal of any load which has remained on the instrument for one half hour, shall not exceed 0.5 *e*.

For a multi-interval instrument, the deviation shall not exceed 0.5 e_1.

On a multiple range instrument, the deviation on returning to zero from Max_1 shall not exceed 0.5 e_1. Furthermore, after returning to zero from any load greater than Max_1 and immediately after switching to the lowest weighing range, the indication near zero shall not vary by more than e_1 during the following 5 minutes.

(c) The durability error due to wear and tear shall not be greater than the value of the maximum permissible error.

Adherence to this requirement is assumed if the instrument has passed the endurance test specified in paragraph 9, which shall be performed only for instrument with

Max $\leq$ 100 kg.

(10) Pattern evaluation tests

Upon pattern evaluation, the tests given in paragraph 9 and Annexure A shall be performed, to verify adherence to the requirement in sub-paragraphs (6), (7), (8) and clauses (i) to (iv) of sub-paragraph (9) of this paragraph, sub-paragraph (5) and (6) of paragraph 4, sub-paragraph (3) of paragraph 5 and sub-paragraph (1) of paragraph 6. The endurance test shall be performed after all other tests in paragraph 9 and Annexure A.

4. Technical requirements for a self or semi-self indicating instruments

(1) General requirements of construction

(i) *Suitability*

(a) Suitability for application

An instrument shall be designed to suit its intended purpose of use.

(b) Suitability for use

An instrument shall be solidly and carefully constructed in order to ensure that it maintains its metrological qualities during a period of use.

(c) Suitability for verification

An instrument shall permit the tests set out in this specification to be performed.

In particular, load receptors shall be such that the standard masses can be deposited on them easily and in total safety. If weights cannot be placed, an additional support may be required.

It must be possible to identify devices that have been subject to a separate type examination procedure (e.g. load cells, printers).

(ii) *Security*

(a) Fraudulent use

An instrument shall have no characteristics likely to facilitate its fraudulent use.

(b) Accidental breakdown and mal-adjustment

An instrument shall be so constructed that an accidental breakdown or a mal-adjustment of control elements likely to disturb its correct functioning cannot take place without its effect being evident.

(c) Controls

Controls shall be so designed that they cannot normally come to rest in positions other than those intended by design, unless during the manoeuvre all indication is made possible, keys shall be marked unambiguously.

(d) Securing (Sealing) of components and pre-set controls

An instrument shall have provisions as required by the director legal metrology, for securing components and preset controls to which access or adjustment likely to affect the metrological characteristics of the instrument, is possible.

On a class I instrument devices to adjust sensitivity may remain unsecured.

(e) Adjustment

If an instrument is fitted with an automatic or a semi-automatic span adjustment device, this device shall be incorporated inside the instrument. External influence upon this device shall be practically impossible after sealing.

(f) Gravity compensation

A gravity sensitive instrument may be equipped with a device for compensating the effects of gravity variation. After securing, external influence on or access to this device shall be practically impossible.

(2) Indication of weighing results

(i) *Quality of reading*

Reading of the results shall be reliable, easy and unambiguous under conditions of normal use:

the overall inaccuracy of reading of an analogue indicating device shall not exceed 0.2 *e*.

the figures forming the results shall be of a size, shape and clarity for reading to be easy.

The scale, numbering and printing shall permit the figures which form the results to be read by simple juxtaposition:

Provided that this requirement shall not be applicable in the case of steel yard type weighing instruments.

(ii) *Form of the indication*

(a) Weighing results shall contain the names or symbols of the units of mass in which they are expressed.

For any one indication of weight, only one unit of mass shall be used.

The scale interval shall be in the form 1×10^k, 2×10^k or 5×10^k, in which the result is expressed, the index *k* being a positive or negative whole number or equal to zero.

All indicating, printing and tare weighing devices of an instrument shall, within any one weighing range, have the same scale interval for any given load.

(b) A digital indication shall display at least one figure beginning at the extreme right.

Where the scale interval is changed automatically the decimal sign shall maintain its position in the display.

A decimal fraction shall be separated from its integer by a decimal sign (comma or dot), with the indication showing at least one figure to the left of the sign and all figures to the right.

Zero may be indicated by one zero to the extreme right, without a decimal sign.

The unit of mass shall be chosen so that weight values have not more than one non-significant zero to the right. For values with decimal sign, the non-significant zero is allowed only in the third position after the decimal sign.

(iii) *Limits of indication*

There shall be no indication above Max + 9 *e*

(iv) *Approximate indication device*

The scale interval of an approximate indicating device shall be greater than Max/100 without being smaller than

20 e. This approximate device is considered as giving secondary indications.

(v) *Extending the range of self-indication on a semi-self-indicating instrument*

The extension interval of the range of self-indication shall not be greater than the value of the self-indication capacity.

(a) The scale interval of extension of the range of the self-indication should be equal to the capacity of self, indication (comparator instruments are excluded from this provision).

(b) An extension device with accessible sliding poises is subject to the requirements of clause (ii) of sub-paragraph (2) of paragraph 6.

(c) On an extension device with enclosed sliding poises or mass switching mechanisms each extension should involve an adequate change in the numbering. It should be possible to seal the housing and the adjusting activities of the weights or masses.

(3) Analogue indicating device

The following requirements apply in addition to those in clause (i) to (iv) of sub-paragraph (2) of this paragraph.

(I) Scale marks : Length and width

Scale shall be designed and numbered so that reading the weighing results is easy and unambiguous.

(a) *Forms of scale marks.*

Scale marks shall consist of lines of equal thickness; this thickness should be constant and between 1/10 and 1/4 of the scale spacing, without being less than 0.2mm. The length of the shortest scale mark should be at least equal to the scale spacing.

(b) Arrangements of scale marks

Scale marks should be arranged in accordance with one of the sketches in Figure 32–D (the line joining the end of the scale marks optional).

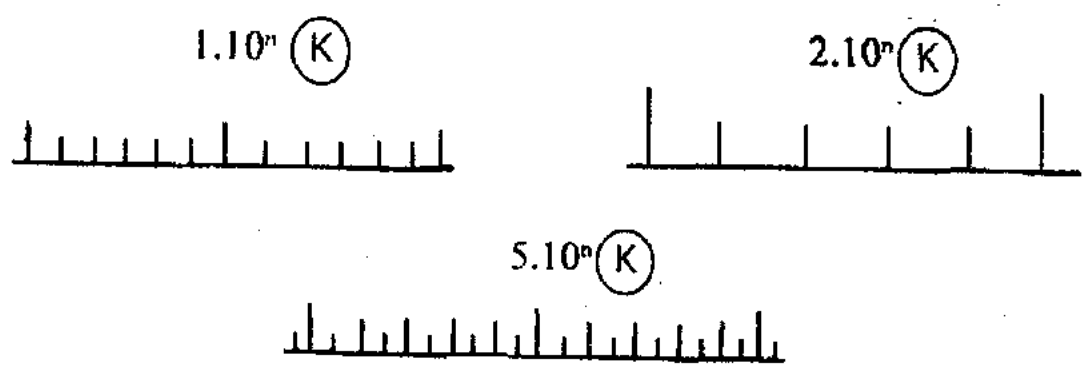

Figure 32 D—Examples of the application to rectilinear scales

(c) Numbering

On one scale, the scale interval of numbering should be:

—constant,

—in the form 1×10^k, 2×10^k, 5×10^k units (k being a positive or a negative whole number or equal to zero),

—not greater than 25 times as the scale interval of the instrument.

If the scale is projected on a screen, at least two numbered scale marks should appear wholly in the projected zone.

The height of the number (real or apparent) expressed in millimetres should be not less than 3 times the minimum reading distance expressed in metre, without being less than 2 mm.

This height should be proportional to the length of the scale mark to which it relates.

The width of a number, measured parallel to the base of the scale,

474 GI/11-99

should be less than the distance between two consecutive numbered scale marks.

(d) Indicating component

The width of the pointer of the indicating components should be approximately equal to that of the scale marks and of the length such that the tip is at least level with the shortest mark.

The distance between the scale and the pointer should be at the most equal to the scale spacing, without being greater than 2 mm.

(ii) *Scale spacing*

on an instrument of class (I) or (II);

1 mm for indicating devices;

0.25 mm for complementary indicating devices;

on an instrument of class III and IIII.

1.25 mm for dial indicating devices.

1.75 mm for optical projection indicating devices.

(iii) *Limits of indication*

Stops shall be provided to limit the movement of the indicating component whilst allowing it to travel below zero and above the capacity of self-indication. This re-requirements does not apply to multi-revolution dial instruments.

The stops limiting the movement of the indicating components should permit it to travel across zones of at least 4 scale spacings below zero and above the capacity of self-indication (three zones are not provided with a scale on fan charts and on dials with a single revolution pointer they are called "blank zone").

(iv) *Damping*

Damping should achieve a stable indication within 5 simple half periods of oscillation.

Hydraulic damping elements sensitive to variations in temperature should be provided with an automotive regulating device or an easily accessible manual regulating device.

It should be impossible for the fluid of hydraulic damping elements on portable instruments to spill when the instrument is inclined at 45°.

(4) Digital indicating and printing devices

The following requirements apply in addition to those in clauses (i) to (v) of sub-paragraph (2) of this paragraph.

(i) *Change of indication*

After a change in load, the previous indication shall not persist for longer than 1 second.

(ii) *Stable equilibrium*

Equilibrium is deemed to be stable when,—

In case of printing and/or data storage, the requirement in clause (v) of sub-paragraph (4) of this paragraph are met,

in case of zero or tare operations clauses (iv), (vi), (vii) of sub-paragraph (5) and (viii) of sub-paragraph (6) of this paragraph, it is sufficiently close to the final equilibrium to allow a correct operation of the device within relevant accuracy requirements.

(iii) *Extended indicating device*

An extended indicating device shall not be used on an instrument with a differentiated scale division.

When an instrument is fitted with an extended indicating device, displaying the indication with a scale interval smaller than 'e' shall be possible only.

during pressing a key, or

for a period not exceeding 5 seconds after a manual command.

In any case printing shall not be possible.

(iv) *Multiple use of indicating device*

Indications other than primary indication may be displayed in the same indicting device, provided that,—

Quantities other than weight values are identified by the appropriate unit of measurement, or symbol thereof, or a special sign.

Weight values that are not weighing results (sub-clause (I) through clause (iii) of sub-paragraph (2) of paragraph 5 Part I) shall be clearly identified, or they may be displayed only temporarily on manual command and shall not be printed.

No restrictions apply if the weighing mode is made inoperative by a special command.

(v) *Printing device*

Printing shall be clear and permanent for the intended use, printed figures shall be at least 2 mm high.

If printing takes place, the name or the symbol of the unit of measurement shall be either to the right of the value or above a column of values.

Printing shall be impossible when the equilibrium is not stable.

Stable equilibrium is considered to be achieved when over a period of 5 seconds following printout, no more than two adjacent values are indicated, one of which being the printed value.

(vi) *Memory storage device*

The storage of primary indications for subsequent indication, date transfer, totalizing, etc, shall be impossible when the equilibrium is not stable. The criterion of stable equilibrium is the same as in clause (v) of sub-paragraph (4) of paragraph 4.

(5) Zero setting and zero-tracking devices

An instrument may have one or more zero-setting devices and shall have not more than one zero-tracking device.

(i) *Maximum effect*

The effect of any zero setting device shall not alter the maximum weighing capacity of the instrument.

The overall effect of zero setting and zero tracking device shall be not more than 4% and of the initial zero setting device not more than 20% of the maximum capacity.

(ii) *Accuracy*

After zero setting, the effect of zero deviation on the result of the weighing shall be not more than 0.25 e; however, on an instrument with auxiliary indicating device this effect shall be not more than 0.5 d.

(iii) *Multiple range instrument*

Zero setting in any weighing range shall be effective also in the greater weighing ranges if switching to a greater weighing range is possible while the instrument is loaded.

(iv) *Control of the zero setting device*

An instrument except an instrument according to sub-paras (13) and (14) of this paragraph,

whether or not equipped with an initial zero-setting device, may have a combined semi-automatic zero-setting device and a semi-automatic tare-balancing device operated by the same key.

If an instrument has a zero device and a tare-weighing device, the control of the zero-setting device shall be separated from that of the tare-weighing device.

A semi-automatic zero setting device shall function only; and when the instrument is in stable equilibrium, it cancels any previous tare operation.

(v) *Zero indicating device on an instrument with digital indication*

An instrument with digital indication shall have device that displays a special signal when the deviation from zero is not more than 0.25 e. This device may also work when zero is indicated after a tare operation.

This device is not mandatory on an instrument that has an auxiliary indicating or a zero-tracking device provided that the rate of zero tracking is not less than 0.25 d/second.

(vi) *Automatic zero setting device*

An automatic zero-setting device shall operate only when,—

the equilibrium is stable, and

the indication has remained stable below zero at least 5 seconds.

(vii) *Zero tracking device*

A zero tracking device shall operate only when,—

the indication is at zero, or at a negative net value equivalent to gross zero, and

the equilibrium is stable, and

the corrections are not more than 0.5 d/ second.

When zero is indicated after a tare operation, the zero tracking device may operate within a range of 4% of max around the actual zero value.

(6) Tare device

(I) *General requirements :*

A tare device shall comply with the relevant provisions of sub-paragraph (1) through (4) of this paragraph.

(ii) *Scale interval :*

The scale interval of a tare-weighing device shall be equal to the scale interval of the instrument for any given load.

(iii) *Accuracy :*

A tare device shall permit setting the indication to zero with an accuracy better than:

± 0.25e for electronic instruments and any instrument with analogue indication.

± 0.25e for mechanical instruments with digital indication and instruments with auxiliary indication device.

± 0.5e for mechanical instruments with digital indication and instruments with auxiliary indication device.

On a multi-interval instrument *e* shall be replaced by e_1.

(iv) *Operating range*

The tare device shall be such that it cannot be used at or below its zero effect or above its maximum indicated effect.

(v) *Visibility of operation*

Operation of the tare device shall be visibly indicated on the instrument. In the case of instruments with digital indication this shall be done by marking the indicated net value with the sign "NET" or "Net" or "net".

Note : If an instrument is equipped with a device that allows the gross values to be displayed temporarily while a tare device is in operation, the "NET" symbol disappears while the gross value is displayed.

This is not required for an instrument with a combined semiautomatic zero-setting device and a semi-automatic tare-balancing device operated by the same key.

(vi) *Subtractive tare device* :

When the use of subtractive tare device does not allow the value of the residual weighing range to be known, a device shall prevent the use of the instrument above its maximum capacity or indicate that this capacity has been reached.

(vii) *Multiple range instrument* :

On a multiple range instrument the tare operation shall be effective also in the greater weighing ranges, if switching to a greater weighing range is possible while the instrument is loaded.

(viii) *Semi-automatic or automatic tare devices*

These devices shall operate only when the instrument is in stable equilibrium.

(ix) *Combined zero setting and tare balancing device*

If the semi automatic zero setting device and semi automatic tare balancing device are operated by the same key; sub clause (ii) and (v) of sub-paragraph (5) of this paragraph and if appropriate sub-clause (vii) of sub-paragraph (5) of this paragraph apply at any load.

(x) *Consecutive tare operations*

Repeat operation of a tare device is permitted.

If more than one tare device is operative at the same time, tare weight values shall be clearly designated when indicated or printed.

(xi) *Printing of weighing results*

Gross weight values may be printed without any designation. For a designation by a symbol, only "G" is permitted.

If only net weight values are printed without corresponding gross or tare values, they may be printed without any designation. A symbol for designation shall be "N". This applies also where semi-automatic zero setting and semi-automatic tare balancing are initiated by the same key.

Gross, net or tare values determined by a multiple range instrument or by a multi-interval instrument need not be marked by a special designation referring to the (partial) weighing range.

If net weight values are printed together with the corresponding gross and/or tare values, the net and tare values shall at least be identified by the corresponding symbol "N" and "T".

However, it is permitted to replace the symbols G, N, T by complete words.

If net weight values and tare values determined by different tare devices are printed separately, they shall be suitably identified.

(7) *Preset tare device*

(7)(i) *Scale interval*

Regardless of how a preset tare value is introduced into the device, its scale interval shall be equal or automatically rounded to the scale interval of the instrument. On a multiple range instrument, a preset tare value may only be transferred from one weighing range to another one with a larger verification scale interval but shall then be rounded to the latter. For a multiple interval instrument, the maximum preset tare value shall not be greater than Max_1 and the indicated or printed, calculated net value shall be rounded to the scale interval of the instrument for the same net weight value.

(ii) *Modes of operation*

A preset tare device may be operated together with one or more tare devices provided that:

clause (x) of sub-paragraph (6) of this paragraph is complied, and

a Preset tare operation cannot be modified or cancelled as long as any tare device operated after the preset tare operation is still in use.

preset tare devices may operate automatically only if the preset tare value is clearly identified with the load to be measured.

(iii) *Indication of operation*

For the indicating device clause (v) of sub-paragraph (6) of this paragraph applies. It shall be possible to indicate the preset tare value at least temporarily.

Provisions of clause (xi) of sub-paragraph (6) of paragraph 4 applies accordingly provided that

if the calculated net value is printed, at least the preset tare value is printed as well, with the exception of an instrument covered by sub-paragraphs (13), (14) or (16) of this paragraph.

Preset tare values are designated by the symbol "PT"; however, it is permitted to replace the symbol "PT" by complete words.

(8) Locking positions

(i) *Prevention of weighing outside the "weight" position*

If an instrument has one or more locking device, these devices shall only have two stable positions corresponding to "locked" and "weigh"; and weighing shall only be possible in the "weigh" position.

A "pre-weigh" position may exist on any instrument of class I or II, except under sub-paragraphs (13), (15) or (16) of this paragraph.

(ii) *Indication of position*

The "locked" and "weigh" positions shall be clearly shown.

(9) Auxiliary calibration devices (removable or fixed)

(i) *Devices with one or more platform*

The nominal value of the ratio between the weights to be placed on the platform to balance a certain load and this load shall not be less than 1/5000 (it shall be visibly indicated just above the platform).

The value of the weights needed to balance a load equal to the verification scale interval shall be an integer multiple of 0.1g

(ii) *Numbered scale devices*

The scale interval of the auxiliary verification devices shall be equal to or smaller than 1/5 of the verification scale interval for which it is intended.

(10) Selection of weighing ranges on a weighing scale on a multiple range instrument

The range which is actually in operation shall be clearly indicated.

(a) *Manual selection of the weighing range is allowed*

—from a smaller to a greater weighing range at any load;

—from a greater to a smaller weighing range when there is no load on the load receptor and the indication is zero at a negative net value. The tare operation receptor shall be cancelled and the zero shall be set to ± 0.25 e both automatically.

(11) Device for selection (or switching) between various load receptors—Load transmitting devices and various load measuring devices

(i) *Compensation of no load effect*

The selection device shall ensure compensation for the unequal no load effect

474 GI/11-100

of the various load receptors-load transmitting devices, in use.

(ii) *Zero setting*

Zero setting of an instrument with any multiple combination of various load measuring devices and various load receptors shall be possible without any ambiguity and in accordance with the provisions of sub-paragraph (5) of paragraph 4.

(iii) *Impossibility of weighing*

Weighing shall not be possible while selection devices are being used.

(iv) *Identification of the combination use*

Combination of load receptors and load measuring devices used shall be readily identifiable.

(12) "Plus" and "minus" comparative instrument

For the purpose of verification a "heavy" or "plus" and "light" or "minus" comparators instrument is considered to be a semi-self indicating instrument.

(i) *Distinction between "plus" and "minus" zone*

On an analogue indicating device, the zones situated on either side of zero shall be distinguished by "+" and "-".

On a digital indicating device, an inscription nearer the indicating device shall be given.

range ± ..... gram (kg, t)

range ..... gram (kg, t)/+.....gram (kg, t)

(ii) *Form of scale*

Scale of a comparator instrument shall have at least one scale division *d* equal to *e* (d = e) on either side of zero. The corresponding value shall be shown at either end of the scale.

(13) Additional requirement for an instrument for direct sales to the public

The following requirements apply to an instrument of class II, III, or IV with a maximum capacity not more than 100 kg capacity designed for direct sale to the public.

(i) *Primary indication*

On an instrument for direct sale to the public, the primary indications are the weighing results and the information about the correct zero position, tare, and pre-set tare operation.

(ii) *Zero setting device*

An instrument for direct sale to the public shall not be fitted with a non-automatic zero setting device unless operated with a tool.

(iii) *Tare device*

A mechanical instrument with a weight receptor shall not be fitted with a tare device.

An instrument shall not be fitted with a device which can recall the gross value while a tare or pre-set tare device is in operation.

(a) Non-automatic tare device

A displacement of 5 mm of a point of the control shall be at the most equal to one verification scale interval.

(b) Semi-automatic tare device

An instrument may be fitted with semi automatic tare device if—

the action of the tare device does not permit the reduction of the tare; and

their effect can only be cancelled when there is no load on the load receptor.

In addition, the instrument shall comply with at least one of the following requirements :

the tare value is indicated permanently in a separate display,

the tare value is indicated with a sign "-" (minus), when there is no load on the load receptor, or

the effect of the device is cancelled automatically when the indication returns to zero when unloading the load receptor after the stable net weighing results greater than zero has been indicated.

(c) *Automatic tare device*

An instrument shall not be fitted with an automatic tare devices.

(iv) *Preset tare device*

A preset tare device may be provided if the preset tare value is indicated as a primary indication on a separate display

which is clearly differentiated from the weight display sub-clause (b) of clause (iii) of sub-paragraph (13) of this paragraph, applies.

It shall not be possible to operate a pre-set tare device, if a tare device is in use.

Where a preset tare is associated with a price look up (PLU), the preset tare value may be cancelled at the same time, as the PLU is cancelled.

(v) *Impossibility of weighing*

It shall be impossible to weigh or to guide the indicating element during the normal locking operation or during the normal operation of adding or subtracting weights.

(vi) *Visibility*

All primary indications shall be displayed clearly and simultaneously to both the vendor and the customer.

On digital devices that display primary indications, the numerical figures on either set shall be of the same dimension and at least 10 mm high, with a tolerance of 0.5 mm

On an instrument to be used with weights, it shall be, possible to distinguish the value of the weights.

(vii) *No auxiliary and extended indicating device*

An instrument shall not be fitted with any auxiliary indicating device nor an extended indicating device.

(viii) *Instrument of class II*

An instrument of class II shall comply with the requirements given in sub-paragraph (9) of paragraph 3 for an instrument of class III.

(ix) *Significant fault*

When a significant fault has been detected, a visible or audible alarm shall be provided for the customer, and data transmission to any peripheral equipment shall be prevented. This alarm shall continue until such time as the user takes action or the cause disappears.

(x) *Counting ratio*

The counting ratio on a mechanical counting instrument shall be 1/10 or 1/100.

(14) Additional requirements for an instrument for direct sale to the public with price indication

The following requirements are to be applied in addition to sub-para (13) of this rule :

(i) *Primary indications*

On a price indicating instrument, the supplementary primary indication are unit price and price to pay and if applicable, number, unit price and price to pay for non-weighed articles and price totals. Price charts, such as fan charts, are not subject to the requirements of this specification.

(ii) *Instrument with price scales*

For unit price and price-to-pay scales, sub-paragraph (2) of this paragraph and clauses (i) to (iii) of sub-paragraph (3) of this paragraph apply accordingly. The decimal shall be indicated to two places.

Reading from price scales shall be so possible that the absolute value of the difference between the product of the indicated weight W and unit price U and the indicated price to pay P is not greater than the product of *e* and the unit price of that scale.

$|W.U - P| \leq e.U$

(iii) *Price computing instrument*

(a) The price to pay shall be calculated and rounded to the nearest interval of price to pay, by multiplication of weight and unit price, both as indicated by the instrument. The device which performs the calculations in any case considered a part of the instrument.

(b) The unit price is restricted to price/100g or price/kg.

(c) Notwithstanding the provisions in clause (i) of sub-paragraph (4) of this paragraph, the indication of weight unit price and price to pay, shall remain visible after the weight indication is stable and after any introduction of the unit price, for at least one second and while the load is on the load receptor.

(d) Notwithstanding the provisions in clause (i) of sub-paragraph (4) of this paragraph, these indications

may remain visible for not more than 3 seconds after removing the load, provided that the weight indication has been stable before and the indication would otherwise be zero. As long as there is a weight indication after removing the load, it shall not be possible to introduce or change a unit price.

(e) If transaction performed by the instrument is printed, weight, unit price and price-to-pay shall all be printed.

(f) The data may be stored in a memory of the instrument before printing. The same data shall not be printed twice on the ticket for the customer.

Instrument that can be used for price labelling purpose, must comply with sub-paragraph (16) of this paragraph as well.

(iv) *Special applications of a price computing instrument*

Only if all transaction performed by the instrument or by connected peripheral are printed on a ticket or label intended for the customer, a price computing instrument may perform additional functions which facilitate trade and management. These functions shall not lead to confusion about the results of weighing and price computing.

Other operations or indications not covered by the following provisions may be performed, provided that no indication which could possibly be misunderstood as a primary indication, is presented to the customer.

(a) Non-weighed articles

An instrument may accept and record positive or negative prices to pay one of several non-weighed articles, provided the weight indication is zero or the weighing mode is made inoperative. The price-to-pay for one or more of such articles, shall be shown in the price-to-pay display.

If the price to pay is calculated for more than one equal article, the number of such articles shall be shown on the weight display, without being possibly taken for a weight and the price for one article on the unit price display, unless supplementary display are used to show the number of articles and articles price.

(b) Totalization

An instrument may totalize transaction on one or several tickets; the price total shall be indicated on the price-to-pay display and printed, accompanied by a special word or symbol, either at the end of the price-to-pay column or on a separate label ticket with appropriate reference to the commodities whose prices to pay have been totalized; all prices to pay that are totalized shall be printed and the price total shall be the algebraic sum of all these prices as printed.

An instrument may totalize transaction performed on other instruments linked to it, directly or over metrologically controlled peripherals, and if the price-to-pay scale intervals of all connected instruments are identical.

(c) Multi-vendor operation

An instrument may be designed to be used by more than one vendor or to serve more than one customer at the same time provided that the connection between the transactions and the relevant vendor or customer is appropriately identified.

(d) Cancellation

An instrument may cancel previous transaction, where the transaction has already been printed, the relevant price-to-pay cancelled shall be printed with an appropriate comment. If the transaction to the cancelled is displayed to the customer, it shall be clearly differentiated from normal transaction.

(e) Additional information

An instrument may print additional information if this is clearly correlated to the transaction and does not interfere with the assignment of the weight value to the unit symbol.

(v) *Self service instrument*

A self service instrument need not have two sets of scales displayed.

If a ticket or label is printed, the primary indications shall include a designation of the product when the instrument used to sell different products.

(15) Instruments similar to one normally used for direct sale to the public

An instrument similar to one normally used for direct sale to the public which does not comply with the provisions of sub-paragraphs (13) and (14) of this paragraph shall carry near the display, the indelible marking :

"NOT TO BE USED FOR DIRECT SALE TO THE PUBLIC"

(16) Price labelling instrument

Clause (viii) of sub-paragraph (13), sub-clauses (a) and (e) of clause (iii) of sub-paragraph (14), sub-clause (a) of clause (iv) of sub-paragraph (14) and sub-clause (e) of clause (iv) of sub-paragraph (14) of this paragraph respectively apply.

A price labelling instrument shall have at least one display for the weight. It may be used temporarily for set-up purpose such as supervision of setting weight limits, unit price, preset tare values, commodity names.

It shall be possible to verify, during use of the instruments, the actual values of unit price and preset tare value.

Printing below minimum capacity shall not be possible.

Printing of labels with fixed values of weight, unit price and price-to-pay is allowed provided that the weighing mode is made in-operative.

(17) Mechanical counting instrument with unit-weight receptor

For the purpose of verification, a counting instrument is considered to be a semi-self indicating instrument.

(i) *Indicating device*

To permit verification, a counting instrument shall have a scale with at least one scale division d = e on either side of zero, the corresponding value shall be shown on the scale.

(ii) *Counting ratio*

The counting ratio shall be shown clearly just above each counting platform or each counting scale mark.

5. Requirements for electronic instruments

In addition to paragraphs 3 and 4, an electronic instrument shall comply with the following requirements.

(1) *General requirements*

(i) An electronic instrument shall be designed and manufactured such that when it is exposed to disturbances :

either;

(a) significant faults do not occur, or

(b) significant faults are detected and acted upon.

Note: A fault equal to or smaller than *e* is allowed irrespective of the value of the error of indication.

(ii) The requirements in sub-paragraphs (6), (7), (8) and (9) of paragraph 3 and clause (i) of sub-paragraph (1) of this paragraph shall be met durably in accordance with the intended use of the instrument.

(iii) A pattern of an electronic instrument is presumed to comply with the requirements in clause (i) and (ii) of sub-paragraph (1) and clause (ii) of sub-paragraph (3) of this paragraph, if it passes the examinations and tests specified in sub-paragraph (4) of this paragraph.

(iv) The requirements in (i) of sub-paragraph (1) of this paragraph may be applied separately to—

(a) each individual clause of significant fault, and/or;

(b) each part of the electronic instrument

The choice, where sub-clause (a) or (b) of clause (i) of sub-paragraph (1) of paragraph 5 is applied, is left to the manufacturer.

(2) Acting upon significant faults

When a significant fault has been detected, the instrument shall either be made inoperative automatically or a visual or audible indication shall be provided automatically and shall continue until such time as the user takes action or the fault disappears.

474 G/11-101

(3) Functional requirements

(i) Upon switch on (switch-on of indication), a special procedure shall be performed that shows all relevant signs of the indicator in the active and non-active state sufficiently long to be checked by the operator.

(ii) In addition to the sub-paragraph (9) of paragraph 3 an electronic instrument shall comply with the requirements under relative humidity of 85% at the upper limit of the temperature range. This is not applicable to an electronic instrument of class I and of class II, if *e* is less than 1 *g*.

(iii) Electronic instruments, class I instruments exempted, shall be subjected to the span stability test specified in clause (iv) of sub-paragraph (4) of this paragraph. The error near maximum capability shall not exceed the maximum permissible error and the absolute value of the difference between the errors obtained for any two measurements shall not exceed half the verification scale interval or half the value of the maximum permissible error, whichever is greater.

(iv) When an electronic instrument is subjected to the disturbances specified in clause (iii) of sub-paragraph (4) of this paragraph, the difference between the weight indication without the disturbance (intrinsic error), shall not exceed *e* or the instruments shall detect and react to a significant fault.

(v) During the warm-up time of an electronic instrument there shall be no indication or transmission of the weighing result.

(vi) An electronic instrument may be equipped with interfaces permitting the coupling of the instrument to any peripheral devices or other instruments.

An interface shall not allow the metrological functions of the instruments measurement data to be inadmissibly influenced by the peripheral devices (for example computers), by other interconnected instruments, or by disturbances acting on the interface.

Functions that are performed or initiated via an interface shall meet the relevant requirements and conditions of clause (iv) of this sub-paragraph.

Note : An "interface" comprises all mechanical, electrical and logic properties at the data interchange point between an instrument and peripheral devices or other instruments.

(a) It shall not be possible to introduce into an instrument, through an interface, instructions or data intended or suitable to:

- display data that are not clearly defined and could be mistaken for a weighing result,
- falsify displayed, processed or stored weighing results,
- adjust the instrument or change any adjustment factor; however instructions may be given through the interface to carryout an adjustment procedure using a span adjustment device incorporated inside the instrument or for instruments in class I, using an external standard mass,
- falsify primary indication displayed in case of direct sales to the public.

(b) An interface through the functions mentioned in sub-clause (a) of clause (vi) of sub-paragraph (3) of this paragraph cannot be performed or initiated, need not be secured. Other interface shall be secured as per sub-clause (d) of clause (ii) of the sub-paragraph (1) of paragraph 4.

(c) An interface intended to be connected to a peripheral device to which the requirements of this (Schedule) apply, shall transmit data relating to primary indication in such a manner that the peripheral device can meet the requirements.

(vii) A battery operated electronic instrument shall either continue to function correctly or not indicate any weight values, whenever the voltage is below the manufacturer's specified value.

(4) Performance and span stability tests

(i) *Test considerations* :

All electronic instruments of the same category, whether or not equipped with checking facilities, shall be subjected to the same performance test programme.

(ii) *State of instrument under test* :

Performance tests shall be carried out on fully operational equipment in its normal

operational state or in a status, as similar as possible thereto.

If an electronic instrument is equipped with an interface permitting the coupling of the instrument to external equipment, the instrument shall, during the tests mentioned in sub-paragraphs (2), (3) and (4) of paragraph 3 of Annexure A be coupled to external equipment, as specified by the test procedure.

(iii) *Performance test*

Performance tests shall be performed according to paragraphs 2 and 3 of Annexure A.

TABLE 43-A

Tests	*Characteristic under test*
Static temperature	Influence factor
Damp heat, steady state	Influence factor
Power voltage variations	Influence factor
Short time power reductions	Disturbance
Bursts (transients)	Disturbance
Electrostatic discharge	Disturbance
Electromagnetic susceptibility	Disturbance

(iv) *Span stability test*

Span stability test shall be performed according to paragraph 4 of Annexure A.

6. Technical requirements for a non-self indicating instrument

A non-self-indicating instrument shall comply, as far as applicable, with paragraphs 3 and 4.

(1) Minimum sensitivity

An extra load equivalent to the absolute value of the maximum permissible error for the applied load, shall be placed on the instrument at equilibrium and shall cause a permanent displacement of the indicating element of at least

1 mm for an instrument of class I or II

2 mm for an instrument of class III or IV with Max. 30 kg

5 mm for an instrument of class III or IV with Max. 30 kg

The sensitivity tests shall be carried out by placing extra loads with a slight impact in order to eliminate the effects of discrimination threshold.

(2) Indicating device

(i) *General provisions*

(a) Equilibrium indicating component

If two indices are provided, with one fixed and another movable then the thickness of the two indicating components shall be equal and the distance between them shall not exceed their thickness.

However, this distance may be equal to 1 mm, if the thickness of the indices is less than this value.

(b) Securing

It shall be possible to secure the sliding poises, the removable masses and the adjusting cavities or the housings of such devices as prescribed by Director.

(c) Printing

If the device permits printing, this should be possible only if sliding bars or poises or a mass switching mechanism are each in a position corresponding to a whole number of scale divisions. Except for accessible sliding poises or bars, printing should be possible only if the equilibrium indicating component is in the reference position to within the nearest half scale interval.

(ii) *Sliding poise device*

(a) Form of scale marks

On bars on which the scale interval is the verification scale interval of the instrument, the scale marks shall consists of lines of constant thickness. On other major (or minor) bars, the scale marks shall consist of notches.

(b) Scale spacing

The distance between scale marks shall not be less than 2 mm and be of sufficient length so that the normal machining tolerance for notches or scale marks does not cause an error in the weighing result exceeding 0.2 of the verification scale interval.

(c) Stops

The displacement of sliding poises on major and minor bars shall be limited

to the graduated part of major and minor bars.

(d) Indicating component

Each sliding poise device shall be provided with an indicating component.

(e) Accessible sliding poise device

There shall be no moving parts in sliding poises, except sliding minor bars.

There shall be no cavity on sliding poises that could accidentally hold foreign bodies.

It shall be possible to secure parts that are detachable.

The displacement of sliding poises on major and minor bars shall require a certain effort.

(iii) *Indication by use of proportional weights*

The reduction ratios shall be in the form 10^k, k being an integer or zero.

On an instrument intended for direct sale to the public, the height of the raised edge of the weights receptor platform should not exceed one-tenth of the greatest dimension of the platform, without being more than 25 mm.

(3) Condition of construction

(i) *Equilibrium indicating component*

An instrument shall be provided with two moving indices or one moving indicating component and a fixed datum mark, the respective position of which indicates the reference position of equilibrium.

On an instrument of class III or IV designed to be used for direct sale to the public, the indices shall allow the equilibrium to be seen from the opposite sides of the instrument.

(ii) *Knives, bearings and friction plates.*

(a) Types of connection

Levers shall be fitted with knives only and these shall be pivoted on bearings.

The line of contact of the knives and bearing shall be a straight line.

Counter beams shall be pivoted on knife edges.

(b) Knives

The knives shall be fitted to the levers in such a way that the invariability of the ratios of the lever arms is assured. They shall not be welded or soldered.

The edges of the knives of one and the same lever shall be practically parallel and shall be situated in one plane.

(c) Bearings :

The bearings shall not be welded or soldered to their supports or in their mountings.

It shall be possible for bearings of an instrument with ratio platforms and steelyards to oscillate in all directions on their supports or in their mountings. On such instruments anti-disconnection devices shall prevent the disconnection of articulated parts.

(d) Friction plates :

The longitudinal play of the knives shall be limited by friction plates. There shall be point contact between knife and friction plates and it shall be situated on the extension of the line(s) of contact between knife and bearing(s).

The friction plate shall form a plane through the point of contact with the knife and its plane shall be perpendicular to the line of the contact between knife and bearing. It shall not be welded or soldered to the bearings or their support.

(iii) *Hardness*

Contact parts of knives, bearings, friction plates, inter levers, inter lever supports and links shall have a hardness of at least 58 Rockwell C.

(iv) *Protective coating*

A protective coating may be applied to the parts in contact of jointed components provided that this does not lead to changes of metrological properties.

(v) *Tare devices*

No instrument shall be fitted with a tare device.

(4) Simple sliding poise instrument (steelyard)

(i) *General*

(a) Scale marks : The scale marks shall be lines or notches, either on the

edge, or on the flat of the graduated shank.

The minimum scale spacing is 2 mm between notches and 4 mm between lines.

(b) Pivots : The load per unit length on the knives shall be not more than 10 kg/mm.

The bores of bearing in the form of an annulus shall have a diameter at least equal to 1.5 times the largest dimension of the cross section of the knife.

(c) Equilibrium indicating component

The length of the equilibrium indicating component, if provided taken from the edge of the fulcrum knife-edge of the instrument, shall be not less than 1/15 of the length of the graduated part of the major sliding poise bar.

(d) Distinctive mark

The head and the sliding poise of an instrument with detachable sliding poises shall bear the same distinctive mark.

(ii) Instrument with single capacity

(a) Minimum distance between knife-edges

The minimum distance between knife-edges is,—

25 mm for maximum capacities less than or equal to 30 kg.

20 mm for maximum capacities exceeding 30 kg.

(b) Graduation

The graduation shall extend from zero to the maximum capacity.

(c) Zero setting

If an instrument of class III or IV is provided with a zero-setting device, this shall be a captive screw or nut arrangement with a maximum effect of 4 verification scale intervals per revolution.

(5) Instrument with a load measuring device with accessible sliding poises (of steelyard type)

(i) *General*

The provisions of sub-paragraph (2) of paragraph 6 relating to load measuring devices with accessible sliding poises shall be observed.

(ii) *Range of numbered scale*

The numbered scale of the instrument shall permit continuous weighing from zero to the maximum capacity.

(iii) *Minimum scale spacing*

The scale spacing i_x of the different bars ($x = 1, 2, 3....$)

$i_x \geq d_x/(e \times 0.05)$ mm but $i_x \geq 2$mm

(iv) *Ratio platform*

If an instrument is provided with a ratio platform for extending the indicating range of the numbered scale, the ratio between the value of the weights placed on the platform to balance a load and the load itself shall be 1/10 or 1/100.

This ratio shall be indicated legibly and permanently on the beam in a position close to the ratio platform, in the form 1 : 10, 1 : 100 or 1/10, 1/100.

(v) *Zero setting*

An instrument shall have a zero-setting device consisting:

either of a cup with greatly convex cover

or of a captive screw or nut arrangement with a maximum effect of 4 verification scale intervals per revolution.

(vi) *Locking of the beam*

An instrument shall have a manual device for locking the beam, the action of which prevents the equilibrium indices coinciding when at rest.

(vii) *Wooden parts*

If certain parts of an instrument, such as the frame, the platform or the board are of wood, this shall be dry and free from defects. It shall be covered with a paint or an effective protective varnish.

No nails shall be used for the final assembly of wooden parts.

7. Marking of an instrument

(1) Descriptive markings

All instruments shall carry, in order, the following markings :

(i) *Compulsory in all cases*

- manufacturer's mark, or name written in full,

474 GI/11—102

- indication of accuracy class in the form
  - for special accuracy I
  - for high accuracy II
  - for medium accuracy III
  - for ordinary accuracy IV
- maximum capacity in the form Max
- minimum capacity in the form Min
- verification scale interval in the form *e* =

(ii) *Compulsory if applicable*

- mark of manufacturer's agent for an imported instrument,
- identification mark on each unit of an instrument consisting of separate but associated units.
- pattern approval mark,
- scale interval if d< e in the form d =
- maximum additional tare effect in the form T = +...
- maximum subtractive tare effect if different from Max in the form T = – ...
- maximum safe load in the form Lim =
- the special temperature limits within which the instrument complies with the prescribed conditions of correct operation in the form °C/ ..... °C/
- counting ratio on a counting instrument in the form 1 : ..... or 1/.....
- range of plus/minus indication of a digital comparator instrument ±.....mg/g/kg/t

(iii) *Presentation of descriptive markings*

The descriptive marking shall be indelible and of a size shape and clarity allowing easy reading.

They shall be grouped together in a clearly visible place either on a descriptive plate fixed to an instrument, or on a part of the instrument itself.

The markings: Max.....
Min.....
e.....
d if d = e and
Accuracy class.....

shall also be shown near the display of the result if they are not already located there.

It shall be possible to seal the plate bearing the descriptive marking.

(a) *Markings in special cases* :

In special case, some of the markings shall be in the form of a table as illustrated below:—

For a multi-interval instrument	*For an instrument with more than one weighing range (W_1, W_2)*		*For an instrument with weighing ranges in different classes*	
	W_1	W_2	W_1	W_2
			II	III
Max 2/5/15 kg	Max 20 kg	100 kg	Max 1000 g	5000 g
Min 20 g	Min 200 g	1 kg	Min 5 g	40 g
e = 1/2/5 g	e = 10 g	50 g	e = 0.1 g	2 g
			d = 0.02 g	2 g

(b) Dimensions :

When several plates are placed one above the other (as for example in the case of an instrument consisting of several separate devices) they should be of the same width. This common width is fixed at 80 mm.

(c) Fixing :

The plate shall be fixed by rivets or screws with one of the rivets of red copper or material having qualities recognised as similar. It should be possible to secure the head of one of the screws by means of a lead cap inserted in a device that cannot be dismantled. The diameter of the rivet or of the lead cap should be able to accommodate a stamp 4 mm in diameter.

(d) Dimension of the letters : The height of capital letters should be at least 2 mm.

(iv) *Specific cases*

(a) Instrument having several load receptors and load measuring devices

Each load measuring device which is connected or can be connected to one or

more load receptors, shall bear the descriptive markings relating to these viz.

identification mark,

maximum capacity,

minimum capacity,

verification scale interval and

if appropriate, maximum safe load and maximum additive tare effect.

(b) Instruments consisting of separately built main parts

If main parts cannot be exchanged without altering the metrological characteristics of the instrument, each unit shall have an identification mark which shall be repeated in the descriptive markings.

(2) Verification marks

(i) *Position*

An instrument shall have a place for the application of verification marks.

This place shall,—

be such that the part on which it is located cannot be removed from the instrument without damaging the marks

allow easy application of the marks without changing the metrological qualities of the instrument

be visible without the instrument having to be moved, when it is in service.

(ii) *Mounting*

An instrument required to bear verification marks shall have a verification mark support, at the place provided for above, which ensures the conservation of the marks:

(a) When the mark is of the self-adhesive type, a space shall be provided on the instrument for the application of the mark.

8. Metrological control

(1) Verification

(i) *Visual inspection*

Before testing, the instrument shall be visually inspected for

metrological characteristics, i.e., accuracy class, Min, Max e, d.

prescribed inscription and position for verification and control marks.

model approval number wherever applicable.

(ii) *Tests*

Tests shall be carried out to verify compliance with the following requirements :

- clause (i) of sub-para (6) of paragraph 3—Value of maximum permissible error,
- sub-clauses (b) and (c) of clause (iii) of sub-paragraph (6) of paragraph 3—Maximum permissible error for net and tare values,
- clause (ii) of sub-paragraph (6) of paragraph 3—Scale interval of the tare weighing device,
- clause (iii) of sub-paragraph (7) of paragraph 4 operation of the tare device shall be visible.
- clause (i) of sub-paragraph (7) of paragraph 3 repeatability (3 weighing on classes III and IV and 6 weighing for I and II)
- clause (ii) of sub-paragraph (7) of paragraph 3-Eccentric loading
- sub-paragraph (8) of paragraph 3—Discrimination

(iii) *Stamping*

Verification shall be testified by verification marks. All components whose dismantling or maladjustment might alter the metrological characteristics of the instrument should be secured by a seal.

(2) Inspection

During inspection the following tests shall be carried :

- maximum permissible error; clause (i) of sub-paragraph (6) of paragraph 3,
- Eccentric loading; clause (ii) of sub-paragraph (7) of paragraph 3,
- the seal applied during verification shall remain intact.

9. Test procedure during verification and inspection

(1) Evaluation of error

At a certain load L, the indicated value, I is noted. Additional weights of say 1/10 e are successively added until the

indication of the instrument is increased unambiguously by one scale interval (I + e). The additional load L added to the load receptor gives the indication P, by using the formula

$P = I + (1/2)e - \Delta L$

The error is $E = P - L$

$= I + (1/2)e - L - \Delta L$

$\leq mpe$

(2) Weights

(i) The standard weights used for verification of an instrument shall not have an error greater than 1/3 of the maximum permissible error of the instrument for the applied load.

(ii) Substitution of standard weights : While verifying instrument with maximum of 1 tonne and more, instead of standard weights, any other constant load may be used, provided that standard weights of at least 1 tonne or 50% of maximum, whichever is greater, is used.

(3) Weighing tests

Apply test loads from zero up to and including Max. and similarly remove the test loads back to zero. During verification 5 test loads shall be selected and during inspection 3 test loads.

The test loads selected shall include Max., Min and values at or near those at which the maximum permissible error changes. When loading or unloading, the weights shall be progressively increased or decreased. If the instrument is provided with an automatic zero setting device, it shall remain in operation during test. Error is calculated as given in sub-para (1) above.

(4) Weighing test using substitution method

Apply the test loads from zero up to and including maximum portion of the standard weights. Determine the error and then remove the weights so that the no load indication, or in the case of an instrument with a zero tracking device, the indication of say 10e, is reached.

Substitute the previous weights with substitution material until the same changeover point, as used for the determining of the error is reached. Repeat the above procedure until Max. of the instrument is reached.

Unload in reverse order to zero, i.e. unload the weights and determine the change over point. Place the weights back and remove the substitution material until the same changeover point is reached. Repeat this procedure until no-load is reached.

(5) Tare

(i) *Tare weighing*

Weighing tests shall be performed at least at two different tare values. At least 5 steps may be selected including Min. loads close to values at which mpe changes and the value close to the maximum possible load (or maximum additive tare if provided).

(6) Eccentricity test

Large weights should be used in preference to several small weights. The load shall be applied centrally in the segment if several weights are used.

The location of the load shall be marked on a sketch in the report.

The automatic zero-setting device shall not remain in operation during the sets.

(i) *Instrument with load receptor having not more than four points of supports*

The four quarter segments roughly equal to 1/4 of the surface of the load receptor shall be loaded in turn.

(ii) *Instruments with a load receptor having more than four points of support*

The load shall be applied over each support on an area of the same order of the magnitude as the fraction of 1/n of the surface area of the load receptor, where *n* is the number of points of support.

(iii) *Instrument with special load receptor (tank, hopper)*

The load shall be applied to each point of support.

(iv) *Instrument used for weighing rolling loads*

A rolling load shall be applied at different positions on the load receptor. These positions shall be at the beginning, the middle and at the end of the load receptor in the normal driving direction. The positions shall then be tested in the reverse direction.

(7) Discrimination test

The following tests shall be performed with three different loads, i.e. Min, 1/2 load and Max.

(i) *Non-self indication and analogue indication*

An extra load shall be placed gently on or removed from the load receptor while the instrument is at equilibrium.

(ii) *Digital indication* :

A load plus sufficient additional weights (say 10 times 1/10 of e) shall be placed on the load receptor. The additional weights shall then be removed until the indication, I is decreased unambiguously by one actual scale interval i.e. I-d. One of the additional weights shall be replaced and a load equal to 1.4 e shall then be placed gently on the load receptor and give a result, increased by one actual scale interval above the initial indication, i.e. I+d.

(8) Repeatability test

Two series of weighing shall be performed; one at 1/2 load and the other at max. Readings shall be taken when the instrument is loaded and unloaded.

(9) Creep test

Load the instrument close to Max. Take one reading as soon as the indication has stabilized and then note the indication while the load remains on the instrument for a period of four hours. During this test the temperature should not vary more than 2°C.

The test may be terminated after 30 minutes if the indication differs less than 0.5e during the first 30 minutes and the difference between 15 and 30 minutes is less than 0.2e.

(10) Zero return test

The deviation in the zero indication before and after a period of loading with a load close to Max for half an hour, shall be determined. The reading shall be taken as soon as the indication has stabilized.

For multiple range instruments, continue to read the zero indication during the following 5 minutes after the indication has stabilized.

If the instrument is provided with automatic zero-setting or zero-tracking, it shall not be in operation.

Test for the stability of equilibrium (instruments with printing and/or data storage devices)

Load the instrument up to 50 per cent of Max. Manually disturb the equilibrium and initiate the command for data printing or data storage as soon as possible. Read the indicated value 5 seconds after printing. Perform the test 5 times.

(11) Influence factors

(i) *Tilting*

The instrument shall be tilted both forwards and backwards longitudinally, and from side to side transversely.

In the text that follows, class II instrument intended for direct sales to the public are designated class II* and class II instrument not intended for direct sale to the public are designated class II.

In practice the tests (no load and loaded) can be combined as follows :

After zero setting in the reference position, the indication is determined at no load and at the two test loads. The instrument is then unloaded and tilted (without a new zero setting), after which the indication at no load and at the two test loads are determined. This procedure is repeated for each of the tilting directions.

In order to determine the influence of tilting on the loaded instrument, the indication obtained at each tilt shall be corrected for the deviation from zero which the instrument had prior to loading.

If the instrument is provided with automatic zero-setting or zero tracking, it shall not be in operation.

Tilting class II, III and IIII instruments

(a) Tilting at no-load (class II*, III and IIII) :

The instrument shall be set to zero in its reference position (not tilted). The instrument shall then be tilted longitudinally up to 2/1000 or the limiting value of the level indicator,

474 GI/11—103

whichever is greater. The zero indication is noted. The test shall be repeated with transverse tilting.

(b) Tilting when loaded (class II, II*, III and IIII) :

The instrument shall be set to zero in its reference position and two weighings shall be carried out at a load close to the lowest load where the maximum permissible error changes, and at a load close to Max. The instrument is then unloaded and tilted longitudinally and set to zero. The tilting shall be 2/1000 or the limiting value of the level indicator, whichever is greater. Weighing tests as described above shall be performed. The test shall be repeated with transverse tilting.

(c) Tilting class I instrument :

The instrument shall be tilted longitudinally up to the limiting value of the level indicator. Check the tilt. Repeat with transverse tilting.

If the tilt is not greater than 2/1000, no further testing is required. Otherwise test as per "tilting when loaded (class II, II* III and IIII)" in (b) above.

(d) Instrument without level indicator :

For an instrument liable to be tilted and not fitted with a level indicator the test "tilting class II, III and IIII" as given in (a) and (b) shall be performed except that the instrument shall be tilted 5% instead of 0.2%.

(12) Warm up time test

An instrument using electric power shall be disconnected from the supply for a period of at least 8 hours prior to the test. The instrument shall then be connected and switched on and as soon as the indication has stabilized, the instrument shall be set to zero and the error at zero shall be determined. Calculation of error shall be made. The instrument shall be loaded with a load close to Max. These observations shall be repeated after 5, 15 and 30 minutes.

For instruments of class I, the provisions of the operating manual for the time following connection to the mains shall be observed.

(13) Temperature tests

See Figure 32 E for practical approach to performing the temperature tests.

(i) *Static temperature tests :*

The test consists of exposure of the equipments under test (EUT) to constant temperatures within the range stated under free air conditions, for a 2 hour period after the EUT has reached temperature stability.

The weighing tests (loading and unloading) shall be carried out

- at a reference temperature (normally 20°C but for class I instruments the mean value of the specified temperature limits);
- at the specified high temperature;
- at the specified low temperature or at a temperature of 5°C if the specified low temperature is below 10°C; and
- at the reference temperature.

The change of temperature shall not exceed 1°C/min during heating and cooling down.

For class I instruments changes in barometric pressure shall be taken into account.

The absolute humidity of the test atmosphere shall not exceed 20 g/m^3, unless the operating manual gives different specifications.

(ii) *Temperature effect on the no-load indication :*

The instrument shall be set to zero and then changed to the prescribed highest and lowest temperature as well as at 5°C if applicable. After stabilisation the error of the zero indication shall be determined. The change in zero indication per 1°C (class I) instrument or per 5°C (other instruments) shall be calculated. The changes of these errors per 1°C (class I instruments) or per 5°C (other instruments) shall be calculated for any two consecutive temperature of this test.

This test may be performed together with the temperature test. The errors at zero shall then be additionally determined immediately before changing to the next temperature and after the 2 hour period after the instrument has reached stability at this temperature.

Note : Pre-loading is not allowed before these measurements.

If the instrument is provided with automatic zero-setting or zero-tracking, it shall not be in operation.

(14) Voltage variation

Stabilize the EUT under constant environmental conditions.

The test consists of subjecting the EUT to variations of AC mains voltage.

The test shall be performed with test loads of 10e and a load between 1/2 Max and Max.

Test severity : Voltage variations : Upper limit V + 10%

Lower limit V - 15%

Where V is the value marked on the instrument.

Maximum allowable variations : All functions shall operate as designed, and all indications shall be within the maximum permissible errors. If the instrument is provided with an automatic zero-setting or a zero tracking device, it may be in operation during the test.

(15) Endurance test :

(Applicable only to instruments of class II, III and IIII with Max ≤100 kg

The endurance test shall be performed after all other tests.

Under normal conditions of use, the instrument shall be subjected to the repetitive loading and unloading of a load approximately equal to 50% of Max. The load shall be applied 100 000 times. The frequency and speed of application shall be such that the instrument attains an equilibrium when loaded and when unloaded. The force of the load applied shall not exceed the force attained in a normal loading operation.

A weighing test in accordance with the procedure shall be performed before the endurance test is started to obtain the intrinsic error. A weighing test shall be performed after the completion of the loadings to determine the durability error due to wear and tear. If the instrument is provided with automatic zero-setting or zero-tracking device it may be in operation during the test.

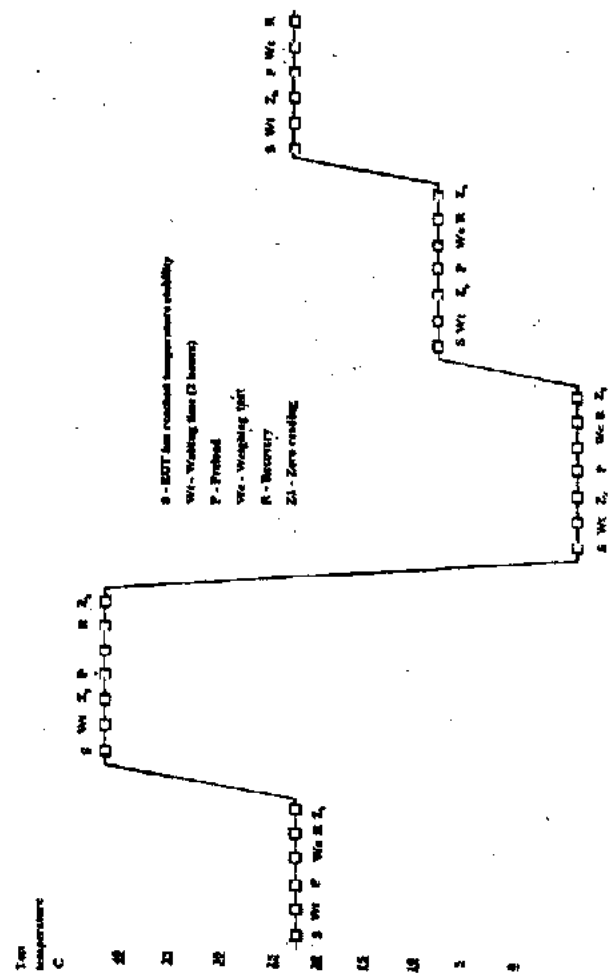

FIGURE 32 E

Proposed test sequence for tests given in clauses (i) and (ii) of sub-paragraph (13) of Paragraph 9 of Part-II

(temperature test where the temperature limits are +40°C / - 10°C)

Annex-A

ADDITIONAL TESTS FOR ELECTRONIC INSTRUMENTS FOR MODEL APPROVAL

1. General requirements for electronic instruments under test (EUT)

Energise the EUT for a time period equal to or greater than the warm up time specified by the manufacturer and maintain the EUT energised for the duration of the test.

Adjust the EUT as closely as practicable to zero prior to each test, and do not re-adjust it at any time during the test, except to reset it if a significant fault has been indicated. The deviation of the no-load indication due to any test condition shall be recorded, and any load indication shall be corrected accordingly to obtain the weighing result.

The handling of the instrument shall be such that no condensation of water occurs on the instrument.

2. Performance tests for influence factors

2(1) Static temperatures.

2(2) Damp heat, steady state

(not applicable to class I instrument or class II instruments where *e* is less than 1 gram).

Test procedure in brief : The test consists of exposure of the EUT to a constant temperature and a constant relative humidity. The EUT shall be tested with at least five different test loads.

- at the reference temperature (20 °C or the mean value of the temperature range whenever 20°C is outside this range) and a relative humidity of 50% following conditioning.
- at the high temperature of the range specified in clause (ii) of sub-paragraph (9) of paragraph 3 of Part II and a relative humidity of 85%, two days following temperature and humidity stabilization, and
- at the reference temperature and relative humidity of 50%.

Maximum allowable variations : All functions shall operate as designed.

All indications shall be within maximum permissible errors.

3. Power voltage variations

Performance tests for disturbances

(1) Short time power reductions

Test procure in brief : Stabilize the EUT under constant environmental conditions.

A test generator capable of reducing the amplitude of one or more half cycles (at zero crossings) or the AC mains voltage shall be used. The test generator shall be adjusted before connecting the EUT. The mains voltage reduction shall be repeated ten times with an interval of at least 10 seconds.

The test shall be performed with test loads of 10*e* and a load between 1/2 Max and Max.

Test severity	*Reductions*	*100%*	*50%*
Number of half cycles		*1*	*2*

Maximum allowable variations : The difference between the weight indication due to the disturbance and the indication without the disturbance shall either not exceeds *e* or the instrument shall detect and react to a significant fault.

(2) Burst

The test consists in exposing the EUT to specified bursts of voltage spikes.

Before any test stabilize the EUT under constant environmental conditions.

The test shall be applied separately to:

power supply lines,

I/O circuits and communications lines, if any.

The test shall be performed with test loads of 10 *e* and a load between 1/2 Max and Max.

Test severity : Open circuit output test voltage for:

- power supply lines 1 kV
- I/O signal 1, data and control lines 0.5kV.

Maximum allowable variations : The difference between the weight indication due to the disturbance and the indication without the disturbance shall either not exceeds *e* or the instrument shall detect and react to a significant fault.

(3) Electrostatic discharge

The test, consists in exposing the EUT to specified, direct and indirect, electrostatic discharges.

This test includes the paint penetration method, if appropriate, for direct discharges the air discharge shall be used where the contact discharge method cannot be applied.

Before any test stabilize the EUT under constant environmental conditions.

At least 10 direct discharges and 10 indirect discharges shall be applied. The time interval between successive discharges shall be at least 10 seconds.

The test shall be performed with test loads of 10e and a load between 1/2 Max. and Max.

Maximum allowable variations : The difference between the weight indication due to the disturbance and the indication without the disturbance shall either not exceeds *e* or the instrument shall detect and react to a significant fault.

(4) Immunity to radiated electromagnetic fields

The test consists in exposing the EUT to specified electromagnetic fields.

Before any test, stabilize the EUT under constant environmental conditions.

The EUT shall be exposed to electromagnetic fields of the strength and character as specified by the severity level.

The test shall be performed with one small test load only :

Frequency range	26-1000	MHz
Field strength	3	V/m
Modulation	80% AM	1 kHz sine wave

Maximum allowable variations : The difference between the weight indication due to the disturbance and the indication without the disturbance either shall not exceed *e* or the instrument shall detect and react to a significant fault.

4. Span stability test

(Not applicable to class I instruments)

Test procedure in brief : The test consists in observing the variations of the error of the EUT under sufficiently constant ambient conditions (reasonably constant conditions in a normal laboratory environment) at various intervals before, during and after the EUT has been subjected to performance tests.

The performance test shall include the temperature test and if applicable, the damp heat test; they shall not include any endurance test; other performance test in this Annexure and in paragraph 9 shall be performed.

The EUT shall be disconnected from the mains power supply, or battery supply where fitted, two times for at least 8 hours during the period of the test. The number of disconnections may be increased if the manufacturer specified so or at the discretion of the approval authority in the absence of any such specification.

For the conduct of this test the manufacturer's operating instructions shall be considered.

The EUT shall be stabilised at sufficiently constant, ambient conditions after switch-on for at least 5 hours, but at least 16 hours after the temperature and damp heat test have been performed.

Test duration : 28 days or the period necessary for the performance tests to be carried out, whichever is shorter.

Time between measurements : Between 1/2 and 10 days.

Test load : Near Max : The same test weights shall be used throughout this test.

Number of measurement at least 8.

Test sequence : Stabilize all factors at sufficiently constant ambient conditions.

Adjust the EUT as close to zero as possible.

Automatic zero-tracking shall be made inoperative and automatic built in span adjustment device shall be made operative.

Apply the test weight(s) and determined the error.

At the first measurement immediately repeat zeroing and loading four times to determine the average value of the error. For the next measurements perform only one unless either the result is outside the specified tolerance or the range of the five readings of the initial measurements is more than 0. 1e.

Record the following data:—

(a) data and time

(b) temperature

(c) barometric pressure

(d) relative humidity

(e) test load

(f) indication

(g) errors

(h) changes in test locations

and apply all necessary corrections resulting from variations of temperature, pressure, etc. between the various measurements.

Allow full recovery of the EUT before any other test is performed.

Maximum allowable variations

The variation in the errors of indication shall not exceed half the verification scale interval or half the absolute value of the maximum permissible error on initial verification or the test load applied, whichever is greater, on any of the *n* measurements.

Where the difference of the results indicate a trend more than half the allowable variation specified above, the test shall be continued until the trend comes to rest or reverses itself, or until the error exceeds the maximum allowable variation.

SEVENTH SCHEDULE

HEADING—B

(See rule 13)

GENERAL REQUIREMENTS

1. Category

Weighing instruments of the following categories are included in this Part:

(a) Beam Scales

(b) Counter Machines

474 GI/11-104

2. Constructions

(a) Weighing instruments shall be of such materials, design and construction that under normal conditions of service:

(i) They maintain accuracy.

(ii) They function satisfactorily without the need for frequent adjustment.

(iii) Excessive stresses do not develop in the vital parts.

(b) The pivots, knife-edges and bearings, wherever used shall be of agate or suitable hard material or of suitable quality steel. The steel knife-edges and bearings shall have the hardness specified below:

(i) For beam scale of classes C and D and with capacities 10kg. and below not less than 54 Rockwell C.

(ii) For other weighing instruments-60 to 66 Rockwell C.

(c) The pivots, knife-edges and bearings shall be protected against corrosion and dirt.

3. Marking

(a) All weighing instruments shall carry the following markings:—

(i) manufacturer's name, or his registered trade mark.

(ii) to weight kg, or g as appropriate.

(iii) class, wherever applicable.

Note : The manufacturer's name or registered trade marks shall be such as will not be mistaken for the stamp or seal of the verification authority.

(b) The markings shall be indelible and of a size, shape and clarity allowing easy reading under normal conditions of use of the instruments.

(c) All numerals appearing on weighing instruments shall be international form of Indian numeral.

4. Sealing

All weighing instruments shall be provided by the manufacturers with a plug or stud of soft metal to receive the stamp or seal of the verification authority. Such plug or stud shall be provided in a conspicuous part of the instrument and shall be made in such a manner as to prevent its removal without obliterating the seal.

PART I BEAM SCALES

1. Definitions

(a) Beam Scale—A weighing instrument with equal arms having three knife edges, three bearings, an indicator (pointer) in the centre, and pans suspended from the end knife-edges.

(b) Sensitivity figure—It is expressed in terms of milligrams per division.

(c) Sensitiveness—It is expressed as the least weight, required to be added to or removed from one of the pans, to cause a visible displacement of the pointer from its position of equilibrium.

Note : 1. Sensitivity figures shall be determined only for those beam scales which have a pointer with sector plate. For other beam scales the sensitiveness test shall apply.

2. All class 'A' beam scales shall be provided with a pointer with sector plate or the scale.

(d) Error (Due to inequality of arms)—The error due to inequality of arms of a beam scale under specified load conditions is equal to the mass of the additional weights required to bring to equipoise the balance, carrying weights of equal masses in the pans.

(e) Greatest Error (Due to Inequality of Arms)—The greatest error due to inequality of arms is the error determined with two weights each equal to the capacity (full load) of the balance.

2. Classes and Capacities

(a) Beam scales shall be of any one of the four classes namely, A, B, C or D, based on limits for sensitivity figure/sensitiveness and greatest error specified in Tables 21-A to 21-D, respectively.

(b) Beam scales of the different classes shall be of one of the capacities mentioned in Tables 21-A to 21-D.

(c) The trades for which the different classes of scales may be used are:

Class of Scale	*Use*
A	* Commercial assay and in 'Dharam Kanta' for verifying the weights of bullion and precious stones.
B	Precious stones, jewels, pearls, bullion, precious metals, saffron and similar expensive commodities, chemists and druggists preparations, perfumery, etc.
C	Base metals and commodities such as cereals, tea, coffee, tobacco, jute, cotton, dry fruits, spices, oil seeds, etc.
D	Weighment of cheaper commodities such as scrap iron, fuel, wood, charcoal, vegetables, etc.

** Single pan balances may also be used in place of Class A or B beam scales. (For tests to be conducted on such balances see annexure at the end of this part.)*

TABLE 21 A

LIMITS FOR SENSITIVITY FIGURE AND GREATEST ERROR FOR BEAM SCALES

Class 'A'

Capacity	*Verification*		*Inspection*	
	Sensitivity figure per division of scale at no load and at full load	*Greatest error allowed when fully loaded*	*Sensitivity figure per division of scale at no load and at full load*	*Greatest error allowed when fully loaded*
1	2	3	4	5
	mg	mg	mg	mg
2 g	0.02	0.04	0.06	0.08
5 g	0.05	0.10	0.15	0.20
10 g	0.10	0.20	0.30	0.40
20 g	0.20	0.40	0.60	0.80
50 g	0.50	1	1.5	2
100 g	1	2	3	4
200 g	2	4	6	8
500 g	5	10	15	20
1 kg	10	20	30	40
2 kg	20	40	60	80
5 kg	30	60	90	120
10 kg	50	100	150	200
20 kg	100	200	300	400
50 kg	200	400	600	800

TABLE 21 B

LIMITS FOR SENSITIVENESS AND GREATEST ERRORS FOR BEAM SCALES

Class 'B'

Capacity	*Verification*		*Inspection*	
	Sensitiveness at full load	*Greatest error allowed when fully loaded*	*Sensitiveness at full load*	*Greatest error allowed when fully loaded*
1	2	3	4	5
2 g	1 mg	2 mg	3 mg	4 mg
5 g	2 mg	4 mg	6 mg	8 mg
10 g	3 mg	6 mg	9 mg	12 mg

1	2	3	4	5
20 g	5 mg	10 mg	15 mg	20 mg
50 g	10 mg	20 mg	30 mg	40 mg
100 g	20 mg	40 mg	60 mg	80 mg
200 g	30 mg	60 mg	90 mg	120 mg
500 g	50 mg	100 mg	150 mg	200 mg
1 kg	100 mg	200 mg	300 mg	400 mg
2 kg	200 mg	400 mg	600 mg	800 mg
5 kg	300 mg	600 mg	900 mg	1.2 g
10 kg	500 mg	1 g	1.5 g	2 g
20 kg	1 g	2 g	3 g	4 g
50 kg	2 g	4 g	6 g	8 g
100 kg	5 g	10 g	15 g	20 g
200 kg	10 g	20 g	30 g	40g

TABLE 21 C

LIMITS OF SENSITIVENESS AND GREATEST ERRORS FOR BEAM SCALES

Capacity	*Verification*		*Inspection*	
	Sensitiveness at full load	*Greatest error allowed when fully loaded*	*Sensitiveness at fully load*	*Greatest error allowed when fully loaded*
1	2	3	4	5
100 g	100 mg	200 mg	300 mg	400 mg
200 g	200 mg	400 mg	600 mg	800 mg
500 g	500 mg	1 g	1.5 g	2 g
1 kg	1 g	2 g	3 g	4 g
2 kg	2 g	4 g	6 g	8 g
5 kg	3 g	6 g	9 g	12 g
10 kg	5 g	10 g	15 g	20 g
20 kg	10 g	20 g	30 g	40 g
50 kg	15 g	30 g	45 g	60 g
100 kg	25 g	50 g	75 g	100 g
200 kg	50 g	100 g	150 g	200 g
300 kg	75 g	150 g	225 g	300 g
500 kg	100 g	200 g	300 g	400 g
1000 kg	150 g	300 g	450 g	600 g

TABLE 21 D

LIMITS OF SENSITIVENESS AND GREATEST ERRORS FOR BEAM SCALES

Class 'D'

Capacity	Verification		Inspection	
	Sensitiveness at full load	Greatest error allowed when fully loaded	Sensitiveness at full load	Greatest error allowed when fully loaded
kg	g	g	g	g
1	2	3	4	5
5	5	10	15	20
10	10	20	30	40
20	20	40	60	80
50	30	60	90	120
100	50	100	150	200
200	100	200	300	400
300	150	300	450	600
500	200	400	600	800
1000	300	600	900	1200

3. Materials

(a) Material for Class A Beam Scales—Class A beam scales shall be made of non-magnetic materials only, except knife-edges and bearings.

(b) Material for other Class of Beam Scales—Beams and pans shall be made of stainless steel, mild steel, brass or bronze. Aluminium alloy may be used in balances, having a capacity of not more than 50g. The pans of Class B beam scales may be made of glass also. In the case of beam scales of Classes C and D, pans of hard-wood shall be permitted for capacities 100 kg. and above. The pans of beam scales, when made of timber, shall be adequately reinforced and protected against wear.

(c) Suspension—Pans shall be suspended from the beam by metal chains through stirrups, hooks or rings. In the case of Class B beam scales of capacity 100 g or less, the pans may be suspended by silk or nylon threads.

(d) All mild steel parts used in beam scales shall be suitably protected against rust.

4. Construction

(a) *Knife-edges and Bearings*

(i) The knife-edges and bearings used in beam scales shall be of one of the following types:—

Agate-box—Wherein agates bearings are fitted in a brass or iron box, with side holes which permit the projecting ends of the knife-edges to pass into the boxes and rest on or rise to their bearings (See Fig- 33 A).

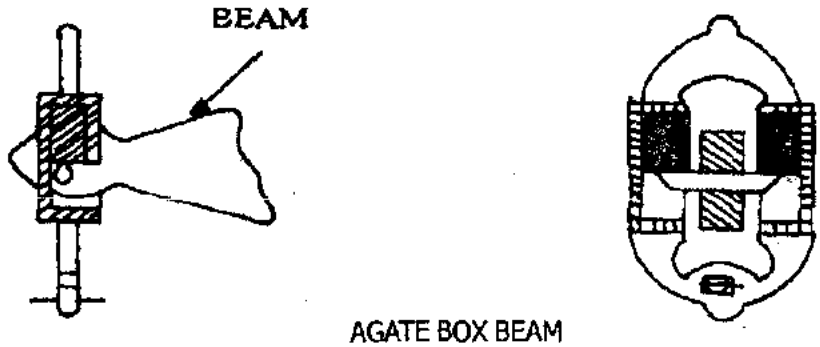

AGATE BOX BEAM

FIGURE-33 A

474 GI/11-105

Dutch-end—Wherein the end bearings are fixed inside plates bolted together across the beam to form a shackle (See Figure- 33 B)

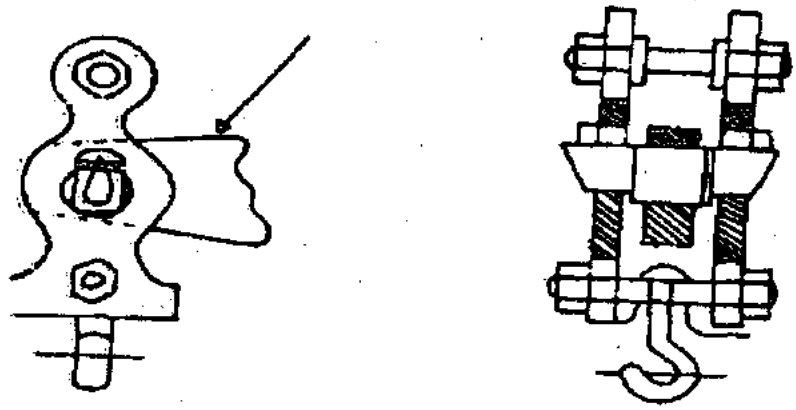

DUTCH-END BEAM

FIGURE-33 B

Swan-neck—Wherein the ends are curved and slotted, the bottom of the slot forming a knife-edge, the extremities of the beam being widened in direction at right angles to its length so that the base of the slot is parallel to the central knife-edge (See Figure 55-H).

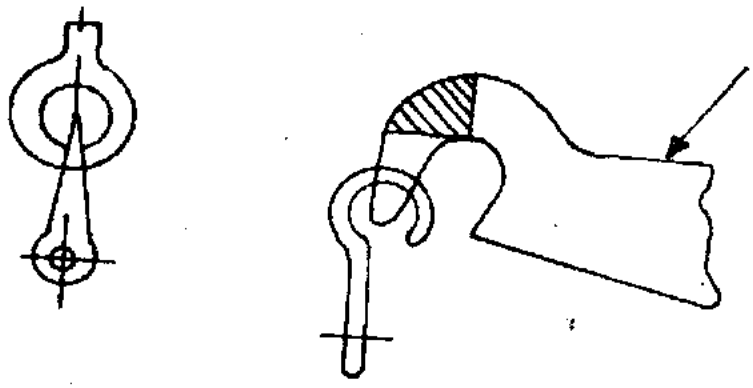

SWAN NECK BEAM

FIGURE-33 C

Continuous knife-edge'—Wherein the knife-edges bear along their whole length (See Fig 33 D)

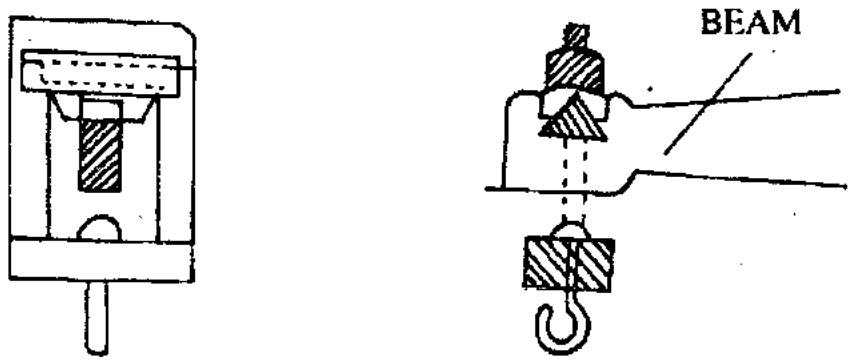

CONTINUOUS KNIFE

FIGURE 33 D

(ii) Class A beam scales shall have continuous knife-edges and shall be provided with means for relieving all the knife-edges from the bearings.

(iii) Class B, beam scale shall not have swan-neck fittings.

(b) *Glass Case*—

Every beam scale of Class A shall be provided with a glass case. It shall also be provided with bubble or a plumb line and levelling screws to facilitate levelling of the instrument.

(c) *Leading Dimensions*

(i) No dimensions have been specified for Class A beam scales.

(ii) Beam scale of Classes B, C and D shall have the leading dimensions specified in Tables 21 E to 21 I and Figure 33 E to 33 I as applicable to within the tolerances specified in 4(d). For Class C beam scales of capacities 5 kg and below fixed hooks may also be provided.

TABLE 21 E

LEADING DIMENSIONS OF BEAM

Class B (with pointer above the beam)

Capacity	Length between ends (Nominal) L	Depth at the centre (Nominal) D	Thickness of plate at the centre (Nominal) T
1	2	3	4
	mm	mm	mm
	FLAT TYPE		
2 g	70	10	2
5 g	95	12	2
10 g	110	15	2
20 g	120	20	3
50 g	135	22	3
100 g	150	25	4
200 g	170	25	5
500 g	200	30	5
1 kg	250	40	6
2 kg	300	45	6
5 kg	450	50	6
10 kg	500	58	8
20 kg	600	58	10
50 kg	750	100	15
100 kg	1000	110	18
200 kg	1250	125	25
	OPEN PATTERN (BRIDGE) TYPE		
200 g	170	25	5
500 g	260	37	5
1 kg	310	44	5
2 kg	350	48	5
5 kg	450	60	6
10 kg	500	70	8
20 kg	600	80	10
50 kg	750	120	15
100 kg	1000	150	20

TABLE 21 F

LEADING DIMENSIONS OF BEAM

Class B (Flat and Open Pattern Type with pointer below the beam)

Capacity	Length between the ends (Nominal)	Depth at the centre (Nominal)	Thickness of plate at the centre knife edge (Nominal)
A	L	D	T
1	2	3	4
	mm	mm	mm
2 g	70	3	2
5 g	95	3	2
10 g	110	4	2
20 g	120	20	3
50 g	135	20	3
100 g	150g	20	4
200 g	200	20	6
500 g	235	25	8
1 kg	300	30	8
2 kg	320	30	8
5 kg	350	32	10
10 kg	400	40	12
20 kg	500	50	14
50 kg	700	70	18
100 kg	800	80	20
200 kg	1250	125	25

TABLE 21 G

LEADING DIMENSIONS OF BEAM

Class C (Swan Neck Type)

Capacity	Length between the ends (Nominal)	Depth at the centre (Nominal)	Thickness of plate at the centre knife edge (Nominal)
	L	D	T
1	2	3	4
	mm	mm	mm
100 g	150	30	4
200 g	200	40	5
500 g	300	40	6
1 kg	350	45	6
2 kg	400	45	6
5 kg	550	70	6
10 kg	600	80	6
20 kg	750	108	8
50 kg	900	116	8
100 kg	1200	138	14
200 kg	1350	148	16
300 kg	1650	154	18
500 kg	1800	178	25
1000 kg	2000	200	32

TABLE 21 H

LEADING DIMENSIONS OF BEAM

Class C (Dutch End Type)

Capacity	Length between end knife-edges (Nominal) L	Depth at the centre (Nominal) D	Thickness of plate at the knife-edge (Nominal) T
1	2	3	4
	mm	mm	mm
100 g	150	35	4
200 g	200	40	5
500 g	300	40	6
1 kg	350	45	6
2 kg	400	45	6
5 kg	450	70	6
10 kg	450	75	8
20 kg	600	75	8
50 kg	750	80	8
100 kg	900	120	14
200 kg	900	133	16
300 kg	1050	142	16
500 kg	1350	192	20
1000 kg	1650	203	25

TABLE 21 I

LEADING DIMENSIONS OF BEAM

Class 'D'

Capacity	Length between the end knife-edges (Nominal) L	Depth at the centre (Nominal) D	Thickness of plate at the centre (Nominal) T
1	2	3	4
kg	mm	mm	mm
	SWAN-NECK WITH FIXED FLAT HOOKS		
5	550	70	6
10	600	80	6
20	750	108	6
50	900	116	8
100	1200	138	14
200	1350	148	16
300	1650	154	18
	DETACHABLE FLAT HOOKS		
500	1800	178	25
1000	2000	200	32

474 GI/11-106

BEAM SCALE CLASS B (FLAT TYPE)

FIGURE-33 E

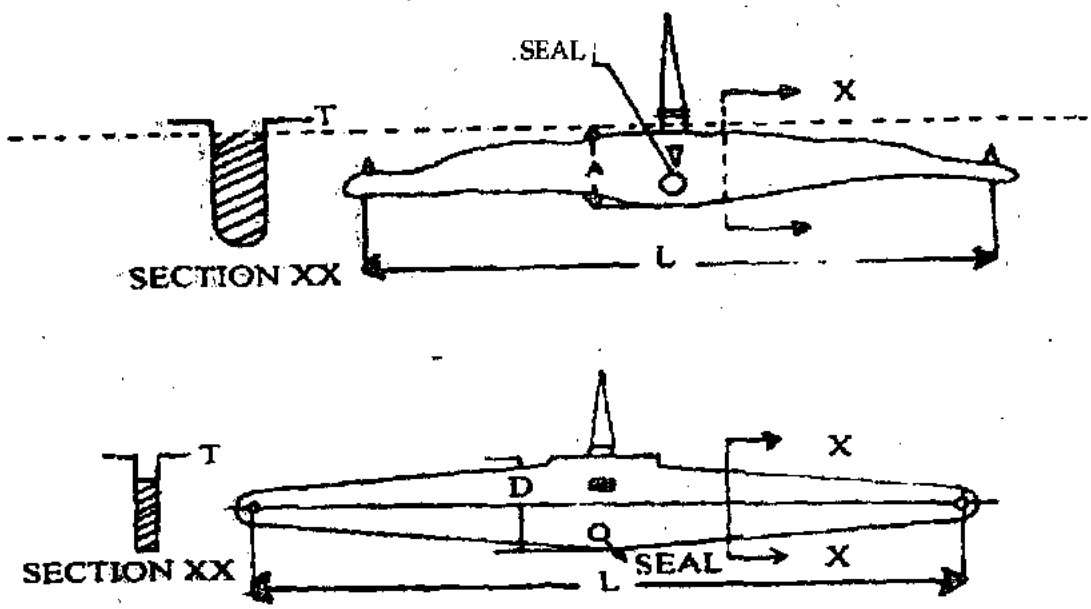

BEAM SCALE CLASS C (DUTCH END TYPE)

FIGURE-33 F

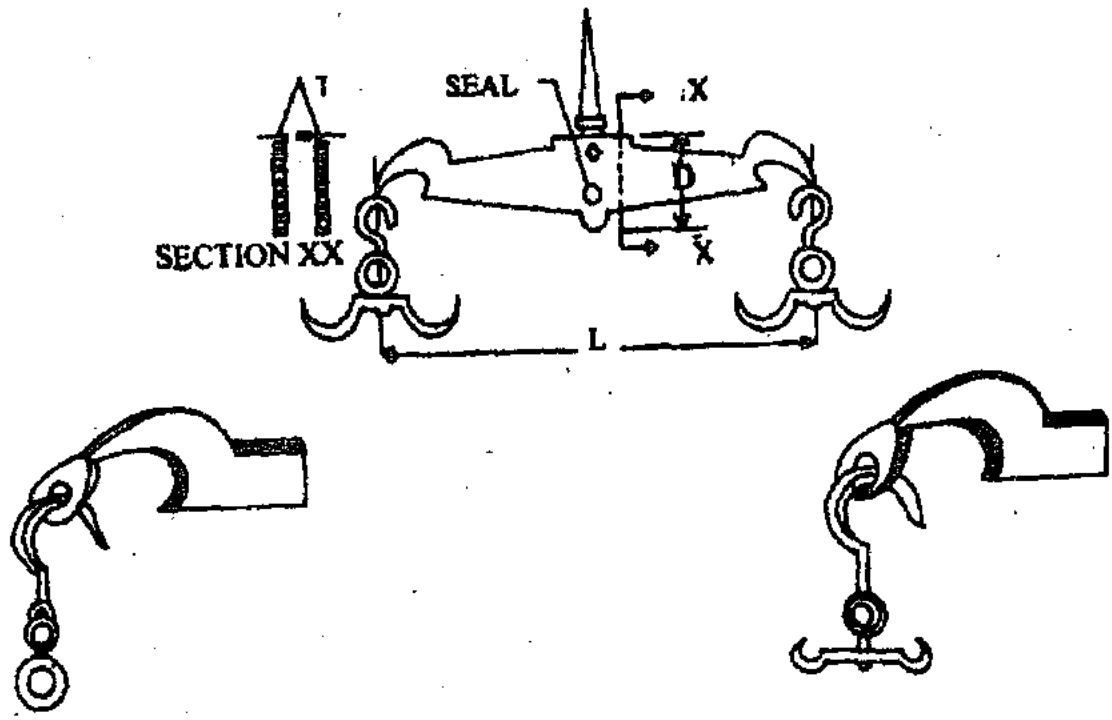

BEAM SCALE CLASS C (SWAN NECK WITH SEPARABLE FLAT HOOKS

FIGURE 33 G

FIGURE-33 G

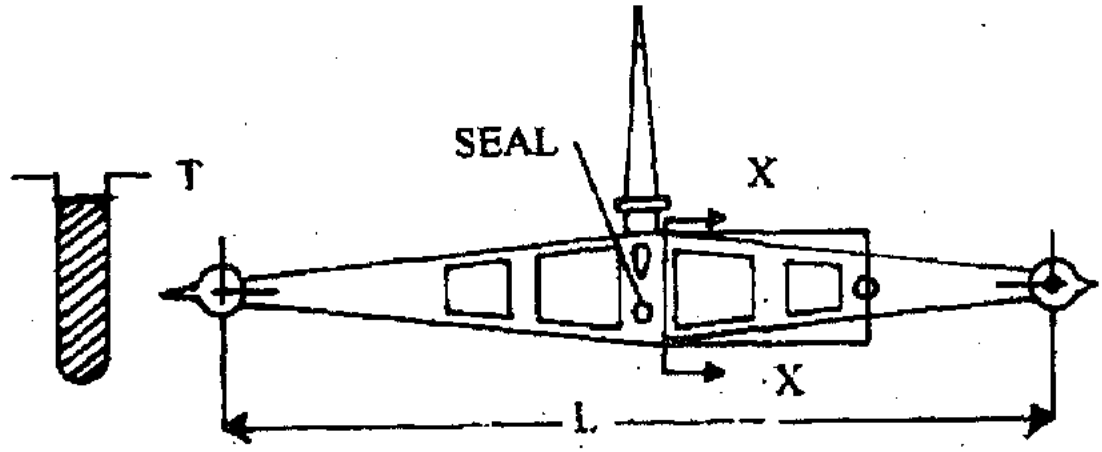

BEAM SCALE CLASS B (OPEN PATTERN TYPE)

FIGURE-33 H

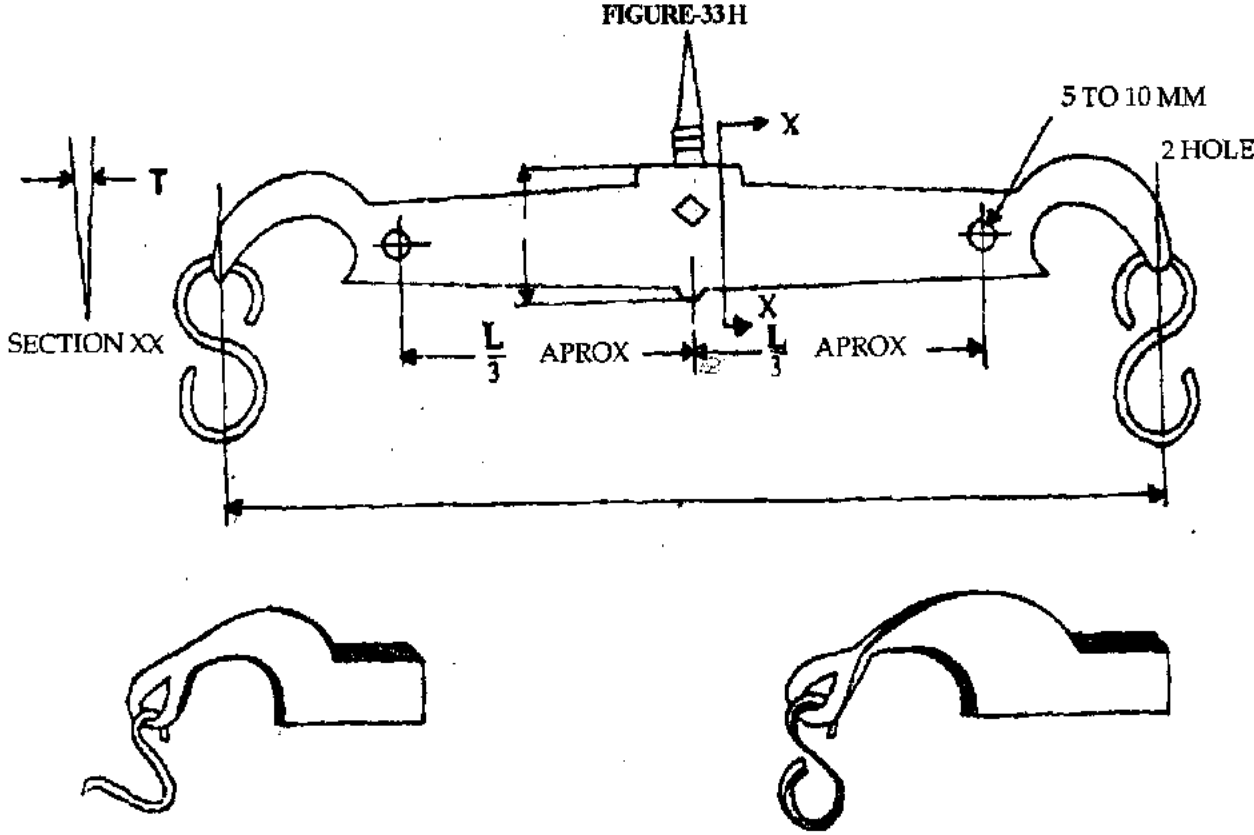

BEAM SCALE CLASS D (SWAN-NECK WITH FIXED FLAT HOOKS)

FIGURE 33 I

Note: Class D beam scales shall be distinguished from Class C scale by the existence of two identical holes 5 to 10 mm in diameter through the beam, one on either side of the central knife-edge.

(d) *Permissible variation in Dimensions*—The dimensions of the beam scales shall not vary by more than 10 per cent of the dimensions prescribed in Tables 21 E to 21 I.

(e) *Attachment for Adjusting the Balance of a Beam scale*—Beam scales of Classes B, C and D may be provided with a balance ball or balance box securely attached to one of the suspended chains or pans in such a manner that it is not possible to alter it easily. The balance ball or balance box shall not be so large as to contain more loose material

than an amount exceeding one percent in weight of the capacity of beam scales under 100 kg or an amount exceeding 1 kg for beam scale of capacity 100 kg and above.

(f) *Arrangement adjusting sensitivity figure*—Beam scales of Class A shall be provided with an attachment for adjusting the sensitivity figure. Beam scales of other classes shall not be provided with an attachment to adjust their sensitiveness.

(g) For the purposes of postal transactions Class C beam scales may be provided with an open type pan as illustrated in Figure 33 J.

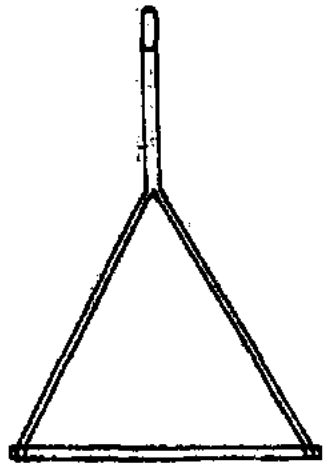

OPEN TYPE PAN

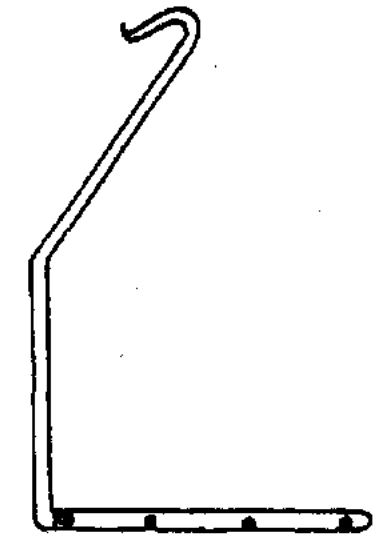

FIGURE 33 J

5. Tests

(a) Test for sensitivity figure or sensitiveness Only —Class 'A' beam scales shall be tested for sensitivity figure. The sensitivity figure shall be determined at zero and full loads and shall comply with the requirements specified in Table 43-B, Beam scales other than Class 'A' shall be tested for sensitiveness at full load only and shall comply with the requirements specified in Tables 43-C to 43-E.

(i) *Class A Beam Scales*—For determining the sensitivity figure of a Class A beam scale at no load, the beam scale shall be properly balanced without any load in the pans. A small weight whose mass is accurately known shall be put on one of the pans. This small weight shall be so chosen that the turning points of the pointer remain within the reading index. The rest point shall be determined by the usual oscillation method. The weight shall then be transferred to the other pan and the second rest point shall be determined. If the rest points shift by 'n' divisions on the scale and if the mass of the test weight is 'w' mg., the sensitivity figure 's' in milligrams per division, at no load, is given by the relation:

$$s = 2w/n.$$

A similar test with appropriate weights in each pan representing the full capacity of the beam scale, shall be performed to determine the sensitivity figure of the beam scale at full load.

(ii) *Class A beam scales 2g to 20g*—As it is not practicable to make weights of denominations smaller than one milligram, the sensitivity figure of beam scales of smaller capacities, that is, from 2 g to 20 g shall be determined by means of a pair of weights, each weight having a mass of approximately 5 mg. The difference in the masses of the two weights of the pair shall be adjusted to be of the order of 0.05 mg, 0.12 mg., 0.25 mg, or 0.5 mg depending on the beam scale under test, that is, for testing 2 g, 5 g, 10 g or 20 g, beam scale, respectively. This difference should be known accurately. After balancing the beam scale at zero load, one of the two weights in the pair shall be put on the right pan and the other weight on the left pan. The rest point shall be determined. The two weights shall then be inter-changed and the second rest point shall be similarly determined. If the rest point shifts by 'n' divisions and if the

difference between the masses of the two test weight is 'w' mg., the sensitivity figure 's' of the beam scale in milligrams per division at zero load is given by the relation:

$$s = 2w/n.$$

To determine the sensitivity figure of the beam scale at full load a similar test shall be performed with weights equal to the maximum capacity of the beam scale in each pan.

(iii) *Beam scales other than class A*—Pans of a beam scale other than Class A, shall be loaded with weights representing its full capacity and the scale is balanced. Weights of such mass shall then be added on one of the pans as may move the tip of the pointer from its equilibrium position by an appreciable distance. After removing these weights the same test shall be repeated on the other pan and the weights required for moving the tip of the pointer by the same distance on the other side of the equilibrium position shall then be added. If these weights are denoted by 'w1' and 'w2' respectively, the sensitiveness "s" of the beam scale is given by the relation:

$$s = \frac{W_1+W_2}{2}$$

(b) *Inequality of Arms Test*

(i) *Class A Beam Scale*—The error due to inequality of arm of Class A beam scale shall be determined by the following method. The beam scale shall be properly balanced without any load in the pans. The rest point (R_0) shall be determined by the usual oscillation method. After arresting the beam both the pans shall be loaded with equal weights of same material and representing the full capacity of the beam scale. The beam scale shall then be properly balanced by adding small weights. The rest point (R_1) shall be determined by the oscillation method. After arresting the beam, the loads, including the small weights, shall be interchanged and scale balanced again by putting additional weights (m), if necessary on one of the pans. The rest point (R_2) shall again be determined. The error (E) caused due to inequality of the arms of the scale is given by

$$E = \frac{m}{2} + \frac{[R_1+R_2-2R_0]s}{2}$$

where S is the sensitivity figure of the beam scale.

(ii) *Beam scales other than Class A*—In the case of beam with fixed hooks the beam with hooks but without chains and pans shall be checked for balance. If detachable hooks are provided the beam alone shall be checked. The loose hooks shall then be attached and the assembly checked for balance. The chains and pans shall then be attached in the case of both the types of balances and checked again for balance.

After checking at no load, each of the pans shall be loaded with weights equal to the maximum capacity of the beam scale and the scale shall be balanced.

The loads thereon shall then the interchanged and the beam scale balanced again by adding necessary weights on one of the pans. The additional weight shall be equal to twice the error due to inequality of arms of the beam.

In the case of beams with attached hooks, the loads shall be interchanged along with the chains, and pans and in the case of beams with detachable hooks the loads shall be interchanged along with the hook chains and pans.

(iii) The figure so obtained shall be halved to determine the error at full-load. These should be within the limits specified in Tables 43-B to 43-E.

(c) Shift Test—Beam scales other than Class A—With the pans loaded to half the capacity, no appreciable difference in the accuracy of the instrument shall result from moving the knife-edges or bearings laterally or backwards and forwards within their limits of movement.

Similarly when the above load is moved to any position on the pan, the difference shown shall not be appreciable.

Note : The words 'appreciable difference' shall mean 'a difference which can be detected', but the Legal Metrology Officer should exercise his discretion in each particular case.

6. Sealing

All beam scales shall be provided by the manufacturer with a plug/plugs or stud/studs of soft metal to receive the stamp or seal of the verification authority. Such plug/plugs or stud/studs shall be provided in a conspicuous position and shall be made in such a manner as to prevent its removal without obliterating the seal/seals.

ANNEXURE

Tests for single pan balances.

1. *Sensitiveness*—The balance shall be tested for sensitiveness near zero, middle and extreme position of the projection scale under three conditions

474 GI/11-107

of loading namely no load, half load and full load. The balance shall be such so as to record the change in mass of the order of 1 sub-division of the projection scale accurately within the limits of the value equivalent to the least count of the vernier or micrometre scale if provided, otherwise within half a division of the projection scale.

2. *Accuracy of projection scale*—The accuracy of the projection scale shall be examined at 10 points of the scale under three different conditions of loading namely at no load, half load and full load. The maximum error at any point shall not exceed the value of the one half-sub-division of the projection scale, if no vernier or micrometer scale is provided or two divisions of the vernier or micrometre scale.

3. *Consistency of performance*—Ten consecutive readings shall be noted by releasing and arresting the balance in the unloaded condition followed by another ten readings when the balance is in fully loaded condition. The standard deviation from the mean of the rest point shall be calculated separately for each condition, which in no case shall exceed half the division of the projection scale if no vernier or micrometer scale is provided or two divisions of the vernier or micrometer scale.

PART II - COUNTER MACHINES

1. Definition

A counter machine is an equal arm weighing instrument of capacity not exceeding 50 kg, the pans of which are above the beam. Figure 33 K illustrates a typical counter machine.

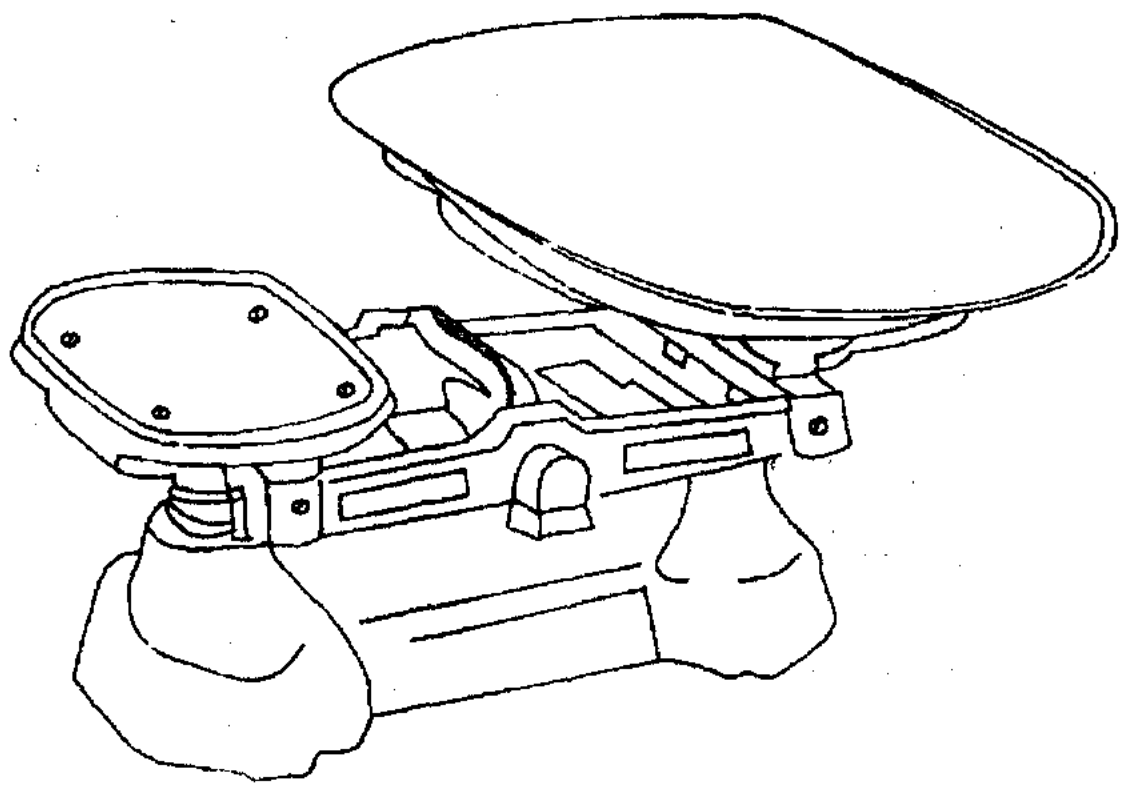

FIGURE 33 K

2. Capacities

The machines may be of the following maximum capacities:—

500g, 1kg, 2kg, 3kg, 5kg, 10kg, 15kg, 20kg, 25kg, 30kg and 50kg.

3. General Requirements

(a) When the beam of body has two sides, they shall be connected further by not less than two cross-bars. The supports for the pans shall be of a suitable rigid structure such as cross members strengthened by straps. Central pieces or forks shall be fixed so that they are not twisted or dislocated.

(b) Bearing surfaces, knife-edges and points of contact of all stays, hooks and loops shall be of hard steel or agate. The knife-edges and bearings shall be so fitted as to allow the

beam to move freely. The knee-edges shall rest upon the bearings along the whole length of their working part.

(c) A counter machine may have a balance box for minor adjustments. In such a case, the balance box shall be permanently fixed beneath the weight pan and shall be large enough to contain loose material to an amount upto one per cent of the capacity of the machine. No other adjusting contrivance shall be used.

(d) The pans may be made of any suitable material such as mild steel, stainless steel, brass or bronze, aluminium or its alloys, porcelain, enamel coated steel, glass or plastic material. They may be of any convenient shape.

(e) The minimum fall of the extremities of the beam, either way, of counter machines shall be as follows:—

Capacity	*Minimum fall*
500 g, 1 kg and 2 kg	6 mm
3 kg, 5 kg, 10 kg, 15 kg	10 mm
20 kg, 25 kg and 30 kg	12 mm
50 kg	13 mm

4. Tests

(a) The machine shall be tested on a horizontal level plane.

(b) *Sensitiveness and Error*

(i) The machine shall be tested for sensitiveness at full load with the beam in a horizontal position. The addition of the weight specified in col. 2 or 4 as the case may be of Table 21 J shall cause the pointer to have a displacement corresponding to the minimum limits specified in paragraph 3(e).

(ii) The error that is the weight required to bring the beam of the instrument to horizontal position when fully loaded with weights each equal to its capacity on both pans shall not exceed the limits specified in cols. 3 and 5 as the case may be of Table 21 JK.

(c) *Shift Test*

(i) When the goods pan is in the form of a scoop, the counter machine shall be correct to the prescribed limits of error if half the full load is placed against the middle of the back of the scoop and the other half at any position on the scoop.

(ii) When the goods pan is not in the form of a scoop, the counter machine shall indicate the same weight within half the prescribed limits of error, if the centre of a load equal to half the capacity placed on the goods pan is moved any where within a distance from the centre equal to one-third of the length of the pan. If the pan has a vertical side against the middle of that side, the weight being entirely on the weight pan, but in any position on it.

TABLE 21 J

SENSITIVENESS AND MAXIMUM PERMISSIBLE ERRORS FOR COUNTER MACHINES

	Verification		Inspection	
Capacity	Sensitiveness when fully loaded	Maximum permissible error, in excess or deficiency, when fully loaded	Sensitiveness when fully loaded	Maximum permissible error in excess or deficiency, when fully loaded
1	2	3	4	5
500 g	1.5 g	2.2 g	4.5 g	4.5 g
1 kg	2.0 g	3.0 g	6.0 g	6.0 g
2 kg	3.0 g	4.5 g	9.0 g	9.0 g
3 kg	4.0 g	6.0 g	12.0 g	12.0 g
5 kg	6.0 g	9.0 g	18.0 g	18.0 g
10 kg	7.0 g	10.5 g	21.0 g	21.0 g
15 kg	8.0 g	12.0 g	24.0 g	24.0 g
20 kg	9.0 g	13.5 g	27.0 g	27.0 g
25 kg	10.0 g	15.0 g	30.0 g	30.0 g
30 kg	11.0 g	20.0 g	33.0 g	40.0 g
50 kg	15.0 g	30.0 g	45.0 g	60.0 g

5. Sealing

Each machine shall be provided with a plug or stud of soft metal on a conspicuous part of the beam or body to receive the stamp or seal of the verification authority. Such a plug or stud shall be made irremovable by undercutting it or by some suitable method.

SEVENTH SCHEDULE

HEADING—C

AUTOMATIC RAIL - WEIGHBRIDGES

PART I

TERMINOLOGY (Terms and definitions)

1. General definitions

(1) Weighing instrument

Measuring instrument that serves to determine the mass of a load by using the action of gravity.

(2) Automatic weighing instrument

An instrument that weighs without the intervention of an operator and follows a predetermined program of automatic processes characteristic of the instrument.

(3) Rail-weighbridge :

A weighing instrument having a load receptor, inclusive of rails for conveying railway vehicles.

(4) Electronic instrument

An instrument equipped with electronic devices.

(5) Control instrument

A non-automatic weighing instrument used to determine the mass of a reference wagon.

(6) Weigh zone

Zone in which a wagon must be located when it is weighed.

2. Construction

Note : In this Recommendation the term "device" is applied to any part which uses any means to perform one or more specific functions.

(1) Load receptor

The part of the weigh zone that is intended to receive the load and which realizes a change in the balance of the instrument when a load is placed upon it.

(i) *Multiple load receptors*

Two or more load receptors placed in series that are used as a single load receptor for full draught weighing.

(ii) *Aprons*

The parts of the weigh zone that are not the load receptor nor part of the load receptor.

(2) Electronic device

A device comprised of electronic subassemblies and performing a specific function. An electronic device is usually manufactured as a separate unit and is capable of being independently tested.

(i) *Electronic sub-assembly*

A part of an electronic device comprised of electronic components and having a recognizable function of its own.

(ii) *Electronic component*

The smallest physical entity that uses electron or hole conduction in semiconductors, gases, or in a vacuum.

(3) Indicating device

The part of the instrument that displays the value of a weighing result in units of mass.

(4) Ancillary devices

(i) *Zero-setting device*

The means used to set to zero the weight indicating device when the load receptor is empty:

(a) Non-automatic zero-setting device : A zero-setting device that must be operated manually.

(b) Semi-automatic zero-setting device : A zero-setting device that operates automatically following a manual command.

(c) Automatic zero-setting device : A zero-setting device that operates automatically and without the intervention of an operator.

(ii) *Printing device*

The means to print the weight values of wagons weighed on the instrument and/or a summation of those wagon weights.

3. Metrological characteristics

(1) Weighing

(i) *Full draught weighing*

Weighing a wagon that is entirely supported on the load receptor(s).

(ii) *Partial weighing*

Weighing a wagon in two or more parts on the same load receptor. The results are

automatically added to indicate or print the wagon weight.

(iii) *Weighing-in-motion (wim)*

Weighing objects that are in motion.

(a) Uncoupled wagon weighing :

Weighing-in-motion of wagons that travel independently across a load receptor. (This is usually achieved by means of an incline of the approach to the load receptor)

(b) Coupled wagon weighing :

Weighing-in-motion of a train of coupled wagons to obtain a weight indication or printout of the individual wagons.

(c) Train weighing :

Weighing-in-motion of a number of coupled wagons to obtain a totalized weight of all the wagon weights.

(iv) *Static weighing*

Weighing a wagon while stationary and uncoupled to obtain a weight for the purposes of testing.

(2) Capacity

(i) *Maximum capacity (Max)*

The largest load that an instrument is designed to weigh-in-motion without totalizing.

(ii) *Minimum capacity (Min)*

The load below which a weighing-in-motion result before totalizing may be subject to an excessive relative error.

(3) Wagon weight

(i) *Maximum wagon weight*

The largest in-motion load that the installation is approved to weigh for a particular site.

(ii) *Minimum wagon weight*

The wagon weight below which a weighing-in-motion result may be subject to an excessive relative error.

(4) Scale interval (d)

A value expressed in units of mass for weighing-in-motion that is the difference between:

the values corresponding to two consecutive scale marks for analogue indication, or

two consecutive indicated or printed values for digital indication.

(i) Scale interval for stationary load : The scale interval used for static tests.

(5) Speed

(i) Maximum operating speed : The greatest velocity of a wagon that the instrument is designed to weigh-in-motion and above which the weighing results may be subject to an excessive relative error.

(ii) Minimum operating speed : The lowest velocity of a wagon that the instrument is designed to weigh-in-motion and below which the weighing results may be subject to an excessive relative error.

(iii) Range of operating speeds : The difference between the minimum and maximum operating speeds at which a wagon may be weighed-in-motion.

(iv) Maximum transit speed : The maximum speed that a railway vehicle can travel on the weigh zone without producing a permanent shift in the performance characteristics of a weighing instrument beyond those specified.

(6) Warm-up time

The time between the moment that power is applied to an instrument and the moment at which the instrument is capable of complying with the requirements.

(7) Durability

Ability of an instrument to maintain its performance characteristics over a period of use.

4. Indications and errors

(1) Methods of indication

(i) *Analogue indication :*

An indication allowing the determination of an equilibrium position to a fraction of the scale interval.

(ii) *Digital indication :*

An indication in which the scale marks are a sequence of aligned figures that do not permit interpolation to a fraction of a scale interval.

(2) Errors

(i) *Error (of indication) :*

The indication of an instrument minus the (conventional) true value of the mass.

474 96/11—108

(ii) *Intrinsic error :*

The error of an instrument under reference conditions

(iii) *Initial intrinsic error :*

The intrinsic error of an instrument as determined prior to performance tests and durability evaluations.

(iv) *Fault :*

The difference between the error of indication and the intrinsic error of a weighing instrument.

Note 1.: Principally, a fault is the result of an undesired change of data contained in or flowing through an electronic instrument.

Note 2.: From the definition it follows that in this specification a "fault" is a numerical value.

(v) *Significant fault :*

A fault greater than d. The following are not considered to be significant faults:

* faults that result from simultaneous and mutually independent causes in the instrument or in its checking facility,
* faults that imply the impossibility of performing any measurement,
* transitory faults that are momentary variations in the indications which cannot be interpreted, memorized or transmitted as a measurement result,
* faults that are so serious that they will inevitably be noticed by those interested in the measurement.

(vi) *Span stability :*

The capability of an instrument to maintain the difference between the indication of weight at maximum capacity and the indication at zero within specified limits over a period of use,

(vii) *Maximum span stability error :*

A span stability error greater than one half of the absolute value of the maximum permissible error applicable to the load.

(viii) *Rounding error :*

The difference between a digital measurement result (indicated or printed) and the value of the measurement result with an analogue indication.

5. Influence quantity

(1) A quantity that is not the subject of the measurement but which influences the value of the measurand and or the indication of the instrument.

(i) *Influence factor :*

An influence quantity having a value within the specified rated operating conditions of the instrument.

(ii) *Disturbance :*

An influence quantity having a value that falls within the limits specified in this specification but that falls outside the rated operating conditions of the instrument.

(2) Rated operating conditions :

Conditions of use which give the ranges of the influence quantities for which the metrological characteristics are intended to lie within the specified maximum permissible errors.

(3) Reference conditions :

A set of specified values of influence factors fixed to ensure valid inter-comparison of the results of measurements.

6. Tests

(1) Static test :

A test with standard weights or a load that remains stationary on the load receptor to determine an error.

(2) In-motion (dynamic) test :

A test with reference wagons that are in motion on the load receptor to determine an error.

(3) Simulation test :

A test carried out on a complete instrument or part of an instrument in which any part of the weighing operation is simulated.

(4) Performance test :

A test to verify that the equipment under test (EUT) is capable of accomplishing its intended functions.

(5) Span stability test :

A test to verify that the EUT is capable of maintaining its performance characteristics over a period of use.

7. Rail vehicles

(1) Wagon :

A loaded or unloaded railway goods vehicle that is recognized by the instrument as a vehicle to be weighed.

(2) Reference wagon :

A wagon of known weight that is typical of those to be used for weighing on the instrument and which has been selected for the purposes of in-motion testing.

(3) Total train :

A number of coupled wagons whose totalized weight is to be obtained.

PART II

METROLOGICAL AND TECHNICAL REQUIREMENTS

1. Scope

(1) This part specifies the requirements and test methods for automatic rail-weigh-bridges, hereinafter referred to as "instruments" that are used to determine the mass of railway wagons, when they are weighed in motion.

2. Metrological Requirements

(1) Accuracy classes :

Instruments are divided into four accuracy classes as follows:—

0.2, 0.5, 1, 2

An instrument may be in a different accuracy class for wagon weighing than that for train weighing.

(2) Maximum permissible errors

(i) *Weighing in motion :*

The maximum permissible errors for weighing-in-motion shall be as specified in Table I

TABLE I

Accuracy	*Percentage of mass of single wagon or class total train as appropriate*	
	Verification	*Inspection*
0.2	± 0.10%	±0.2%
0.5	± 0.25%	±0.5%
1	± 0.50%	± 1.0%
2	± 1.00%	± 2.0%

Note : For the application of maximum permissible errors refer to paragraphs 2(8)(ii)(a) and 2(8)(ii)(b) of this part.

On initial verification of an instrument weighing coupled wagons, the errors of not more than 10% of the weighing results taken from one or more passes of the test train may exceed the appropriate maximum permissible error given in Table I but shall not exceed two time that value.

(a) A minimum of 500 metre rail track length shall be available with a gradient of not more than 1 : 400 on either side of automatic rail weighbridge.

(ii) *Static weighing* : The maximum permissible errors on static weighing for increasing or decreasing loads shall be the appropriate values in Table II.

TABLE II

Maximum permissible errors	*Load (m) expressed in number of scale intervals*
± 0.5d	$0 \le m \le 500$
± 1.0d	$500 \le m \le 2000$
± 1.5d	$2000 \le m \le 10000$

(3) Scale Interval (d)

For a particular method of weighing-in-motion and combination of load receptors, all weight indicating and printing devices on an instrument shall have the same scale interval.

The relationship between the accuracy class, the scale interval and the maximum wagon weight divided by the scale interval shall be as specified in Table III.

TABLE III

Accuracy class	*d(kg)*	*(Maximum wagon weight)/d*	
		minimum	*maximum*
0.2	≤ 50	1000	5000
0.5	≤ 100	500	2500
1	≤ 200	250	1250
2	≤ 500	100	600

The scale intervals of the indicating or printing devices shall be in the form of 1×10^k, 2×10^k, or 5×10^k, "k" being a positive or a negative whole number or zero.

(4) Minimum capacity

The minimum capacity shall not be less than it, and not greater than the value of the result of the minimum wagon weight divided by the number of partial weighings.

(5) Minimum wagon weight

The minimum wagon weight shall not be less than 50d.

(6) Single axle or bogie weights

Single axle or bogie weights shall not be indicated or printed without an associated warning that these weighing results cannot be verified.

(7) Agreement between indicating & printing devices.

For the same load, the difference between the weighing results provided by any two devices having the same scale intervals shall be as follows:—

- zero for digital devices
- not greater than the absolute value of the maximum permissible error for weighing in motion for analog devices.

(8) Weighing test methods

The appropriate procedures are specified in paragraph 5(1) (pattern evaluation) 5(2) (initial verification) and 5(3) (inspection) of this part.

(i) *Static weighing* :

An instrument to be used as a control instrument shall meet the requirements of paragraph 2(8)(iii)(b) and paragraph 2(8)(i)(a) to 2(8)(i)(f) inclusive. The maximum permissible errors shall comply with Table II.

(a) Multiple load receptors :

Each load receptor shall be tested by the static-weighing method both independently and in combination.

(b) Zero-setting :

The instrument shall be capable of setting to zero within ± 0.25% of the scale interval for a stationary load.

(c) Eccentric loading :

The indications for different positions of the load shall comply with the maximum permissible errors for the given load.

(d) Verification standards :

The error of the standard weights or masses used shall not be greater than one-third of the maximum permissible error for the load, as specified in Table II.

(e) Test loads

(e-i) Load at which errors are to be determined

Errors shall be determined for test loads of:

- zero
- minimum capacity,
- maximum capacity, and at or near a load where the maximum permissible error changes

(e-ii) Distribution of test load

Except for eccentricity test, standard weights or masses shall be evenly distributed on the load receptor.

(e-iii) Eccentricity tests :

Tests shall be carried out without excessive stacking or overlapping of the load on the load receptor provided that the conditions are practical and safe. The test load shall be equal to one half of the maximum capacity rounded up to the next 1 tonne increment. The test load shall be on the rails covering the least area as is practicable and stacked across each pair of supports of the load receptor.

(f) Discrimination tests :

An additional load that is equal to 1.4 times the scale interval for a stationary load, when gently placed on or withdrawn from each load receptor in turn when at equilibrium at any load shall change the initial indication.

(ii) Weighing-in-motion

(a) Wagon weighing :

The maximum permissible error for coupled or uncoupled wagon weighing shall be one of the following values, whichever is greater:

- the value calculated according to Table I, rounded to the nearest scale interval.
- the value calculated according to Table I, rounded to the nearest scale interval for the weight of a single wagon equal to 35% of the maximum wagon weight (as inscribed on the descriptive markings), or
- 1d.

(b) Train weighing :

The maximum permissible error for train weighing shall be one of the following values, whichever is greater:

- the value calculated according to Table I, rounded to the nearest scale interval,
- the value calculated according to Table I, for the weight of a single wagon equal to 35% of the maximum wagon weight (as inscribed on the descriptive markings) multiplied by the number of reference

wagons in the train (not exceeding 10 wagons) and rounded to the nearest scale interval, or

- 1d for each wagon in the train but not exceeding 10d

See Figure 1 for an illustration of this requirement.

(iii) *Verification standard*

(a) Separate control instrument :

A control instrument capable of being used to determine the mass of each reference wagon when stationary and uncoupled shall be available for in-motion tests. The error of that instrument shall not be greater than either of the following values:—

- one-third of the appropriate maximum permissible error for in-motion-weighing in clause paragraph 2(8)(ii) of this part and Table I if the control instrument is verified immediately prior to the in-motion tests.
- one-fifth of the maximum permissible error if the control instrument is verified at any other time.

Figure I

AUTOMATIC RAIL-WELGHBRIDGES

Illustration of maximum permissible errors and in-motion test requirements for a sample train

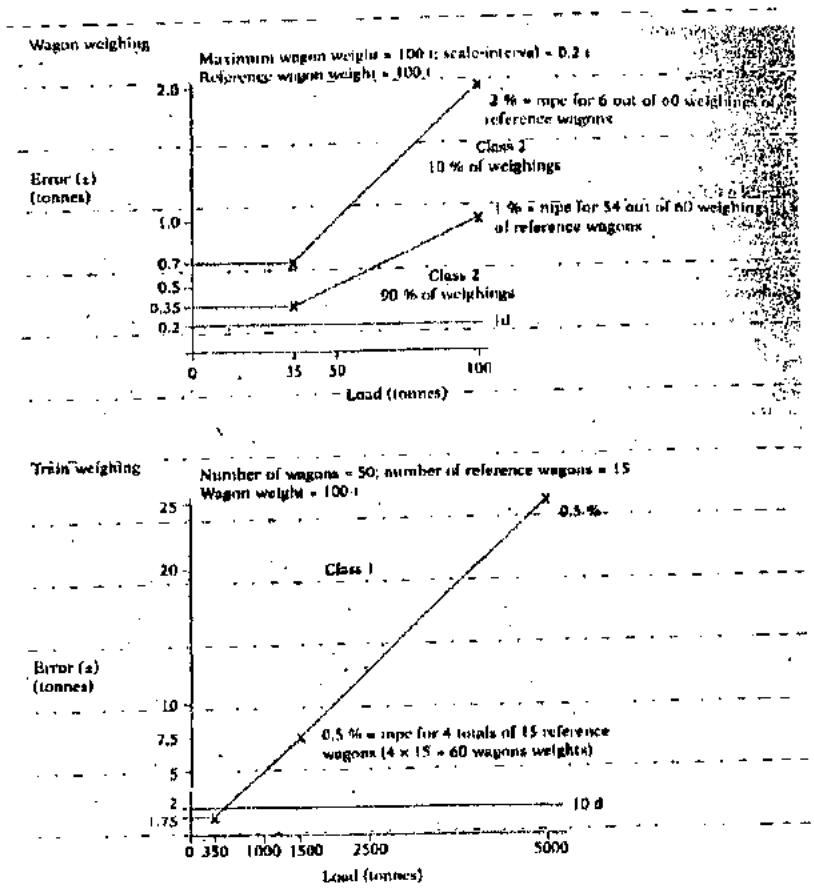

An instrument constructed only for partial weighing of two axle wagons may be used as the control instrument provided that the alignment calibration in Annex B has been successfully applied.

(b) Integral control instrument

An instrument under test may be used as the control instrument provided that it meets the following requirements :—

- it must have an appropriate scale interval or scale interval for stationary land, and
- it must comply with the requirements in paragraph 2(8)(i) and para 2(8)(iii)(a) of this part.

An instrument constructed only for partial weighing of two-axle wagons may be used as the

474 GI/11-109

control instrument, provided that the alignment calibration in Annex B has been successfully applied.

(9) Influence quantities

(i) *Temperature :*

Instruments shall comply with the appropriate metrological and technical requirements at temperatures from - 10°C to + 45°C.

For special applications, however, the limits of the temperature range may differ, provided that this range shall not be less than 30°C and shall be specified in the descriptive markings.

Instruments shall be tested in accordance with the static temperature tests in paragraph 8(1) of Annexure A.

(ii) *Main Power Supply (AC) :*

Instruments that are powered by an AC supply shall comply with the appropriate metrological and technical requirements when operated under variations of voltage from - 15% to + 10% of the value marked on the instruments.

Instruments shall be tested in accordance with main power supply (AC) test in paragraph 8(3) of Annexure A.

(iii) *Battery Power supply (DC) :*

Instruments that are powered by a DC supply shall, comply with appropriate metrological paragraph and technical requirements in accordance with paragraph 4(3)(viii) of this part.

Instruments shall be tested in accordance with the DC power supply test in paragraph 8(4) of Annexure A.

(10) Conditions of use

(i) *Use as a non-automatic weighing instrument :*

An instrument that can be used as a non-automatic weighing instrument shall meet the requirements for accuracy class III (medium accuracy) and IIII (ordinary accuracy) under specification for "non-automatic weighing instruments" given in Heading A of the Seventh Schedule.

(ii) *Scale interval for stationary load :*

If the scale interval for stationary load is not equal to the verification scale interval (d), it shall be automatically out of service when the instrument is in use for weighing-in-motion. In addition, if the instrument is not verified for use as a non-automatic weighing instrument, the verification scale interval for stationary load shall not be readily accessible and shall only be used for static testing.

3. Technical requirement

(1) Composition :

Instruments shall include the following:

- one or more load receptors,
- aprons,
- vehicle type identification devices (e.g. track switch, load cells, transponder, etc.),
- indicating devices,
- printer,
- control unit.

(2) Suitability for use :

Instrument shall be designed to suit the vehicle, site and method of operation for which they are intended.

Instruments constructed only for partial weighing shall not be used to weigh liquid loads or any other load that may be subjected to fluctuations in its gravity centre, unless there is a possibility to anticipate and compensate for such fluctuations.

(3) Security of operation

(i) *Accidental maladjustment :*

Instruments shall be constructed so that maladjustments likely to disturb their metrological performance cannot normally take place without the effect being easily detected.

(ii) *Interlocks :*

Interlocks shall prevent the use of any control device that may alter a weighing operation.

(iii) *Uncoupled wagon weighing :*

Instruments used for uncoupled wagon weighing shall recognize and indicate the following situations:

- the passage of two or more coupled wagons,
- the passage of two or more uncoupled wagons that is sufficiently close to

cause either a malfunction of the instruments or errors exceeding the appropriate maximum permissible errors.

(iv) *Use as a non-automatic weighing instrument :*

An instrument to be used as a non-automatic weighing instrument shall

- comply with the requirements of accuracy class III or class IV of "specification for non-automatic weighing instruments prescribed in Seventh Schedule Heading A, and
- be equipped with an enabling device for non-automatic operation that prevents both automatic operation and in-motion weighing.

(v) *Zero setting device :*

An instrument shall be equipped with a semi-automatic or automatic zero setting device for each load receptor. Its operation shall be possible only when the instrument is in stable equilibrium and when the rate of correction is no more than 0.5d/s.

The range of the zero-setting device shall not exceed 4% of the maximum capacity.

(4) Indicating and printing devices

(i) *Quality of indication :*

The weight indication shall be the self-indicating type. Indicating and printing device shall allow reliable, simple and unambiguous reading of the results by simple juxtaposition and shall bear the name or symbol of the appropriate unit of mass.

(ii) *Printing :*

The minimum printout resulting from each normal weighing operation shall be each wagon weight in the case of wagon weighing and total train weight in the case of train weighing.

(iii) *Weighing range :*

Instruments shall not indicate or print :

- the weight of any wagon, or
- a totalized weight inclusive of any wagon, that will cause a weighing results less than Min or greater than Max + 9d.

(iv) *Operating speed :*

The printer shall not print the weight or any wagon that has travelled over the load receptor at a speed outside the range of operating speeds. An appropriate indication shall be included on the printout for any wagon weight not printed and subtotal may be printed exclusive of unweighed wagons provided that an indication clearly specified that it is not the total train weight.

(v) *Roll back :*

The weight indication and printout shall not be altered due to any part of any wagon travelling over the load receptor more than once. If Rollback takes place at the time of testing the entire weighing operation has to be repeated a new. The speed difference shall not be more than 3 kmph.

(5) Installation

(i) *Ease of static testing :*

The instrument shall be accessible to vehicle for moving test weights if it is to be used as the control instruments.

(ii) *Drainage :*

If the weighing mechanism is contained in a pit, there shall be a provision for drainage to ensure that no portion of the instrument becomes submerged or partially submerged in water or any other liquid.

(6) Descriptive markings

Instruments shall bear the following basic markings at each location having a weight indicating or printing device.

(i) *Markings shown in full*

- identification mark of the manufacturer
- identification mark of the importer (if applicable)
- designations of the instrument
- serial number of the instrument on each load receptor (if applicable)
- weighing method (see item 3(1) under part I)
- maximum wagon weight-kg or t
- minimum wagon weight-kg or t

- not to be used to weigh liquid products (if applicable)
- full draught or number of partial weighing per wagon
- not to be used to weigh liquid product (if applicable)
- maximum transit speed-km/h
- direction of weighing (if applicable)
- wagons pushed/pulled (whichever is applicable)
- scale interval for stationary load (if applicable)-kg
- or t
- electric power supply voltage and frequency-v..... Hz

(ii) Marking shown in code

(a) For all instruments

- pattern approval mark
- accuracy class (for each weighing method, if applicable) 0.2, 0.5, 1 or 2.
- maximum capacity Max-kg or t
- minimum capacity Min-kg or t
- scale inter d-kg or t
- maximum operating speed V max-km/h
- minimum operating speed V min-km/h

(b) For coupled wagon and train weighing : Marking required for each weighing method applicable:

- maximum number of wagons per train -n max.
- minimum number of wagons per train -n min.

(iii) *Other markings :*

The designation of the liquid(s) which the instruments is designed to weight (if applicable)

(iv) *Presentation of descriptive markings :*

Descriptive markings shall be indelible and of a size, shape and clarity that permit legibility under normal conditions of use of the instrument

Markings shall be grouped together in a clearly visible place on the instrument, either on a descriptive plate fixed near the indicating device or on the indicating device itself

It shall be possible to seal the plate bearing the markings, unless it cannot be removed without being destroyed.

(7) Verification marks

(i) *Position :*

Instruments shall have a place for the application of verification marks. The following applies for this place:

The part on which the marks are located cannot be removed from the instruments without damaging the marks.

The place shall permit the easy application of the marks without changing the metrological qualities of the instruments.

The marks shall be visible when the instrument is in service.

(ii) *Mounting :*

Instruments required to bear verification marks shall have a verification mark support located as specified above, which shall ensure the conservation of the marks as follows:—

- When the mark is made with a stamp, the support may consist of a strip of lead or any other material with similar qualities inserted into a plate fixed to the instrument or a cavity bored into the instrument.
- When the mark consists of an adhesive transfer, a space shall be provided for this purpose.

4. Requirements for electronic instruments

Electronic instruments shall comply with the following requirements, in addition to the applicable requirements of all other clauses.

(1) General requirements

(i) *Rated operating conditions :*

Electronic weighing instruments shall be designed and manufactured so that they do not exceed the maximum permissible errors under rated operating conditions.

(ii) *Disturbances :*

Electronic instruments shall be designed and manufactured so that when they are exposed to disturbances, either

(a) significant faults do not occur, or

(b) significant faults are detected and acted upon.

Note : A fault equal to or less than the significant fault (1d) is allowed irrespective of the value of the error of indication.

(iii) *Durability :*

The requirements in paragraphs 4(1)(i) and 4(1)(ii) of this part shall be met durably in accordance with the intended use of the instrument

(iv) *Evaluation for compliance :*

A pattern of an electronic instrument is presumed to comply with the requirements in paragraphs 4(1)(i), 4(1)(ii) and 4(1)(iii) of this part if it passes the examination and tests specified in Annexure A.

(2) Application

(i) The requirements in paragraph 4(1)(ii) of this part may be applied separately for the following:—

each individual cause of significant fault, and/or

each part of the electronic instrument

(ii) The choice as to whether to apply paragraph 4(1)(ii)(a) or paragraph 4(1)(ii)(b) of this part is left to the manufacturer.

(3) Functional requirements

(i) *Acting upon a significant fault :*

When a significant fault has been detected, a visual or audible indication shall be provided and shall continue until the user takes action or the fault disappears.

Means shall be provided to retain any totalized load information contained in the instrument when a significant fault occurs.

(ii) *Switch-on procedure :*

Upon switch-on (in the case of electronic instruments permanently connected to the mains at switch-on of indication), a special procedure shall be performed that indicates all the relevant signs of the indicator in their active and non-active state for a sufficient time to be easily observed by the operator.

(iii) *Influence factors :*

An electronic instrument shall comply with the requirements of paragraph 2(9) of this part and in addition it shall maintain its metrological and technical characteristics at a relative humidity of 85% at the upper limit of the temperature range of the instrument.

(iv) *Disturbances :*

When an electronic instrument is subjected to the disturbances specified in Annex A, either of the following shall apply:

The difference between the weight indication due to the disturbance and the indication without the disturbances (intrinsic error) shall not exceed the significant fault (1d).

The instrument shall detect and act upon a significant fault.

(v) *Warm up time :*

During the warm-up time of an electronic instrument, there shall be no indication or transmission of the weighing result and automatic operation shall be inhibited.

(vi) *Interface :*

An instrument may be equipped with an interface permitting the coupling of the instrument to external equipment. When an interface is used, the instrument shall continue to function correctly and its metrological functions shall not be influenced.

(vii) *Mains power supply (AC) :*

An instrument that operates from the mains shall in the event of a power failure retain the metrological information contained in the instrument at the time of failure for at least 24 hours. A switch-over to an emergency power supply shall not cause a significant fault.

(viii) *Battery power supply (DC) :*

An instrument that operates from a battery power supply shall, whenever the voltage drops below the manufacturer's specified value, either continue to function correctly or automatically be put out of service.

(4) Examination and tests :

The examination and testing of an electronic weighing instrument is intended to verify compliance with the applicable requirements of this specification and especially with the requirements in paragraph 4 of this part.

474 GI/11-11a

(i) *Examinations :*

An electronic weighing instrument shall be examined to obtain a general appraisal of the design and construction.

(ii) *Performance tests :*

An electronic weighing instrument or electronic device, as appropriate, shall be tested as specified in the Annex to determine their correct functioning.

Tests are to be conducted on the whole instrument except when the size and/or configuration of the instrument does not lend itself to testing as a unit. It such cases, the separate electronic devices shall be subjected to testing. It is not intended that electronic devices be further dismantled for separate testing of components. In addition, an examination shall be carried out on the fully operational weighing instrument or, if necessary, on the electronic devices in a simulated set-up that sufficiently represents the weighing instrument. The equipment shall continue to function correctly as specified in Annexure A.

(iii) *Span stability tests :*

The instrument shall be subjected to span stability tests at various intervals, before during and after being subjected to performance tests.

When the instrument is subjected to the span stability tests specified in paragraph 10 of Annexure A.

The maximum allowable variation in the errors of indication shall not exceed half the absolute value of the maximum permissible error in Table II for the test load applied on any of the measurements.

Where the difference of the results indicate a trend more than half the allowable variation specified above, the test shall be continued until the trend comes to rest or reverses itself, or until the error exceeds the maximum allowable variation.

5. Metrological controls

The metrological controls of instruments shall consist of the following:—

- pattern evaluation
- initial verification
- in-service inspection

(1) Pattern evaluation

(i) *Documentation :*

The application for pattern evaluation shall include documentation which provides the following information:—

- metrological characteristics of the instrument;
- a standard set of specifications for the instruments;
- a functional description of the components and devices;
- drawings, diagrams and general soft ware information (if applicable), explaining the construction and operation;
- any document or other evidence demonstrating that the design and construction of the instrument complies with the requirements of this specification.

(ii) *General Requirements :*

Pattern evaluation shall be carried out on at least one and normally, not more than three instruments that represent the definitive pattern. At least one of the instruments shall be completely installed at a typical site and at least one of the instruments or the major component of an instrument shall be submitted in a form suitable for simulation testing in a laboratory. Pattern evaluation shall be carried out as prescribed under the Model Approval Rules.

The evaluation shall consist of the tests specified in paragraph 5(1)(iii) of this part.

(iii) *Pattern evaluation tests :*

Instruments shall comply with the following:—

- the metrological requirements in paragraph 2 of this part, particularly with reference to maximum permissible errors and, if appropriate, when the instrument is operated in accordance with the manufacturer's specification for products;

Note : Evaluation for static weighing [paragraph 2(8)(i)] shall be excluded unless the instrument is constructed for use as a control instruments [paragraph 2(8)(iii)(b)].

- the technical requirement in paragraph 3 of this part.

Additionally, electronic instruments shall comply with the requirements in paragraph 4 of this part.

(a) In-motion tests :

The instrument shall be tested in accordance with the provisions in paragraph 2(8)(ii) of this part by reference to "initial verification" as appropriate and shall comply with the requirements in paragraph 2(7) of this part. Errors shall be determined by comparing the tests results with the reference wagon mass derived as in paragraph 2(8)(iii) of this part.

The range of speeds used during these tests shall be in accordance with the pattern specification.

(a-I) Uncoupled wagons :

Instruments for weighing individual un coupled wagons shall be tested using not less than five reference wagons having a range of loads from zero load (wagon tare weight) to that of a fully loaded wagon. A minimum of five weight indications or print outs of each wagon shall be used for assessing compliance with the requirements in paragraph 2(8)(ii)(a) of this part.

(a-II) Coupled wagons :

Instruments designed to weigh either individual coupled wagons or a total train of coupled wagons shall be tested in either of the following manners:—

- By using a test train of empty reference wagons and a test train of both full and partially filled reference wagons. Each test train shall be comprised of not less than five (and normally not more than 15) reference wagons and shall be weighed repeatedly and in each direction (if applicable) to yield not less than 60 wagon weights or the equivalent in total train weight.
- According to the requirements in paragraph 5(2)(ii) of this part.
- Each weight indication and printout obtained in the test shall be used for assessing compliance with requirements in either paragraphs 2(8)(ii)(a) or 2(8)(ii)(b) of this part, as appropriate:

PROVIDED that where test wagons are not available loaded wagon weighed on a static machine fulfilling conditions laid down in paragraph 2(8)(i)(d) of this part shall be used as a reference wagon.

(b) Simulation tests :

Influence factors shall be applied during simulation tests in a manner that will reveal an alteration of the weighing results for any weighing process to which the instrument could be applied, in accordance with the following:—

Paragraph 2(9) of this part for all instruments

Paragraph 4 of this part for electronic instruments.

When conducting such tests on a load cell or on an electronic device equipped with an analogue component, the maximum permissible error for the device under test shall be 0.7 times the appropriate value specified in Table II.

If the metrological characteristics of the load cell, or other major component has been evaluated in accordance with the requirements of the OIML International Recommendation R60 or any other applicable Recommendation that evaluation shall be used to aid in the pattern evaluation, if so requested by the applicant.

Note : Since the requirements of this clause apply only to the instrument submitted for pattern evaluation and not to those subsequently submitted for verification, the means used to determine if the appropriate maximum permissible error or maximum allowable variation has been exceeded will be decided and mutually agreed upon between the Metrological Authority and the applicant. Following are examples of these means:—

- an adaptation of the indicating device to give greater resolution than that of the scale interval;
- the use of the scale interval for stationery load;
- the use of change points;
- any other means mutually agreed upon.

(3) Tests for compliance to determine

compliance with the requirements in paragraphs 3(3) and 3(4) of this part.

(iv) *Provisions of means for testing :*

For the purpose of testing, the applicant may be required to furnish the Metrological Enforcement Authority with the test vehicles, material, qualified personnel and a control instrument. The instrument under test may be used as a control instrument provided it complies with the requirements in paragraph 2(8)(iii)(b) of this part.

(v) *Place of testing :*

Instruments submitted for pattern approval may be tested at the following places:

- a site at which all necessary tests can be conducted and agreed upon between the Metrological Authority and the applicant,
- a laboratory considered appropriate by the Metrological Authority,
- any other suitable place mutually agreed upon by the Metrological Authority and the applicant.

(2) Verification

(i) *Tests :*

Instruments shall comply with the requirements in paragraph 2 [except 2(9)] and paragraph 3 of this part for any product(s) for which they are intended and when operated under normal conditions of use

Tests shall be carried out in-situ, in a normal installation. The instruments shall be installed so that an automatic weighing operation will be virtually the same for testing as it is for a transaction.

(ii) *In-motion tests :*

In-motion tests shall be conducted in accordance with paragraph 5(1)(iii)(a) of this part with the exception that the types of vehicles and, for test with coupled wagons the number of vehicles in the test train shall be in accordance with the normal operation of the instruments and used in accordance with paragraph 6 of this part.

(iii) *Provisions of means of testing :*

For the purposes of testing, the applicant may be required to furnish the enforcement authority with the test vehicles, material, qualified personnel and a control instrument. The instrument under test may be used as a control instrument provided it complies with the requirements in paragraph 2(8)(iii)(b) of this part.

(iv) *Place of testing :*

Verification test shall be conducted entirely at the place of installation and during testing, the instrument shall include all parts which form the assembly as intended for normal use.

(3) Inspection :

Inspection shall be carried out in accordance with the same provisions as in paragraph 5(2) of this part for verification with the exemption that the maximum permissible errors applicable for inspection shall be applied.

6. On site test methods

(1) Proportion of reference wagons in a test train

The proportion of reference wagons to the remaining wagons in a test train shall be in accordance with Table-IV.

TABLE IV

Total number of wagons in test train(n)	*Minimum number of reference wagons*
$n \leq 10$	n
$10 < n \leq 30$	10
$30 < n$	15

(2) In-motion tests with coupled wagons

If the number of reference wagons is less than the total number of wagons in a test train, the reference wagons shall be distributed throughout the train.

(3) In motion tests with liquid load

When using liquid load, tests shall be consistent with the intended use of the instrument.

ANNEXURE A

TEST PROCEDURES FOR AUTOMATIC RAIL-WEIGHBRIDGES

(Mandatory)

Meaning of symbols:

I = Indication

L = Load

ΔL = Additional load to next changeover point

$P = I + 0.5d - \Delta L$ = Indication prior to rounding

$P_n = n^{th}$ indication prior to rounding

d = Scale interval

E = P - L = error

E_0 = Error calculated at zero

E_c = Corrected error

mpe = Maximum permissible error

EUT = Equipment under test

Max = Maximum capacity

Min = Minimum capacity

1. Documentation [5(1)(i)]

Review the documentation that is submitted, including necessary photographs, drawings, diagrams, general software information, relevant technical and functional description of main components, devices etc. to determine if it is adequate and correct. Consider the operational manual.

2. Comparing construction with documentation 5(1)(i)

Examine the various devices of the instrument to ensure compliance with the documentation.

Examine the simulator to ensure that it is adequate for train movement simulation. It shall provide the signals from track switches, or other vehicle type identification devices, normally transmitted when a vehicle passes over the weighing system. It is not expected to simulate effects such as dynamic loading.

3. Initial examination

(1) Metrological characteristics :

Note metrological characteristics in the test report.

(2) Descriptive markings [3(6)] :

Check the descriptive markings.

(3) Verification marks [3(7)] :

Check the arrangements for verification marks.

4. General

(1) General requirements for electronic instruments under test (EUT) :

Energize the EUT for a time period equal to or greater than the warm-up time specified by the manufacturer and maintain it energized for the duration of the test.

Adjust the EUT as closely as practicable to zero prior to each test, and do not readjust it at anytime during the test, except to reset it if a significant fault has been indicated.

The deviation of the no-load indication due to any test condition shall be recorded, and any load indication shall be corrected accordingly to obtain the weighing results.

The handling of the instrument shall be such that no condensation of water occurs on the instrument.

(i) *Indication with a scale interval smaller than d*

If an instrument with digital indication has a device for displaying the indication with a smaller scale interval, this device may be used to calculate the error. If a device is used it should be noted in the test report.

(2) Calculation of error :

For instruments with digital indication with a test scale interval [see note in 5(1)(iii)(b)] less or equal to 0.1 d, the device may be used directly to read the error.

For instruments with digital indication and with a test scale interval greater than 0.1.d, changeover points are used to determine the indication of the instrument, prior to rounding, as follows:—

At a certain load, L, the indicated value, I, is noted. Additional weights of for example 0.1d are successively added until the indication of the instrument is increased unambiguously by one scale interval (I+d). The additional load -L added to the load receptor gives the indication, P, prior to rounding by using the following formula:—

$$P = I + 0.5\,d - \Delta L$$

The error prior to rounding is:

$$E = P - L$$

Thus $$E = (I + 0.5d - \Delta L) - L$$

Example : An instrument with a scale interval, d, of 10 kg is loaded with 1000 kg and thereby indicates 1000 kg. After adding successive weights of 1 kg. the indication changes from 1000 kg to 1010 kg at an additional load of 3 kg. Inserted in the above formula these observations give:

$$P = (1000 + 5 - 3)\text{ kg} = 1002\text{ kg}$$

Thus the true indication prior to rounding is 1002 kg, and the error is:

$$E = (1002 - 1000)\text{ kg} = 2\text{ kg}$$

5. Test program

(1) Pattern evaluation [5(1)] :

All tests of paragraphs 6 to 10 of Annexure A shall normally be applied for pattern evaluation.

The tests for paragraphs 6 to 10 of Annexure A shall be performed with static load, a wheel movement

474 GI/11—111

simulator (switches) may be used if necessary for the calculation of the weighing results.

(2) Initial verification [5(2)] :

Initial verification tests normally only includes the tests in paragraph 11 of Annexure A.

The test shall include all dynamic in-motion effects corresponding to normal operation of the instrument.

6. Performance tests during pattern evaluation

The equipment under test should have the following items associated with it, for the purpose of testing:—

- Weight simulator.
- Train wheel simulator.
- For practical reasons, the weight simulator may take various forms. For example, it may be a weigh pan or platform scale of approximately 1/1000th of the weight range of a site installation.

Whichever method is adopted, it must be independently calibrated and readable to at least 0.1d.

(1) General conditions

(i) *Temperature :*

The tests shall be performed at a steady ambient temperature, usually normal room temperature unless otherwise specified.

The temperature is deemed to be steady when the difference between the extreme temperatures noted during the test does not exceed one-fifth of the temperature range of the given instrument without being greater than 5°C and the rate of change does not exceed 5°C per hour.

(ii) *Power supply :*

Instruments using electric power shall normally be connected to the power supply and "on" throughout the tests.

(iii) *Automatic zero-setting :*

During the tests, the automatic zero-setting device may be switched off. When this is done it should be mentioned in the test report.

For certain tests the test description specifies whether the automatic zero-setting shall be operative or inoperative.

(iv) *Recovery :*

After each test the instrument should be allowed to recover sufficiently before the following test.

(2) Checking of zero

(i) *Range of zero-setting [3(3)(iv)]*

(a) Semi-automatic zero-setting :

This test shall not be carried out during the span stability test.

With the load receptor empty, set the instrument to zero. Place a test load on the load receptor and use the zero-setting device. Continue incrementing the test load until the zero-setting device fails to re-zero when activated. The maximum load that can be rezeroed is the positive portion of the zero-setting range.

To test the negative portion of the zero-setting range, recalibrate the instrument with an additional weight on the load receptor at the zero and span points. This additional weight should be greater than the negative zero-setting range. Then remove weights and after each weight is removed, use the zero-setting device. The maximum load that can be removed while the instrument can still be re-zeroed by the zero-setting device, is the negative portion of the zero-setting range.

Recalibrate the instrument without this additional weight.

(b) Automatic zero-setting :

This test shall not be carried out during the span stability test.

With the load receptor empty, add weights in small quantities and after each weight is added allow time for the automatic zero-setting device to function to see if the instrument is re-zeroed automatically. Repeat this procedure until the instrument will not be re-zeroed automatically. The maximum load that can be re-zeroed is the positive portion of the automatic zero-setting range.

To test the negative portion of the zero-setting range recalibrate the instrument with an additional weight on the load receptor at the zero and span points. This additional weight should be greater than the negative zero-setting range. Then remove weights and after each weight is removed, allow time for the automatic zero-setting device to function to see if the instrument is re-zeroed automatically. The maximum load that can be removed while the instrument can still be re-zeroed by the zero-setting device, is the negative portion of the zero-setting range.

Re-zero the instrument without this additional weight.

(3) Setting to zero before loading :

For instruments with digital indication, the adjustment to zero, or the determination of the zero point is carried out as described in paragraph 6(5)(i) of this Annexure.

(4) Association of indicating and printing device [2(7)]

If the instrument has more than one indicating device, the indications of the various devices (both indicating and printing) are compared during the test.

(5) Non-automatic tests of the control instrument

Note : This sub-clause is only applicable to instruments which are to be used as control instruments.

(i) *Accuracy of zero-setting [2(8)(i)(b)]*

(a) Semi-automatic zero-setting :

The accuracy of the zero-setting device is tested by setting the instrument to zero and then determining the additional load at which the indication changes from zero to one scale interval above zero. The error at zero is calculated according to the description in paragraph 4(2) of this part.

(b) Automatic zero-setting :

The indication is either brought outside the zero range, or the automatic zero-setting is disabled. Then the additional load at which the indication changes from one scale interval to the next above is determined and the error is calculated according to the description in paragraph 4(2) of this Annexure. It is assumed that the error at zero load would be equal to the error at the load in question.

(ii) *Determination of weighing performance*

(a) Preloading :

Before the first weighing test the instrument shall be preloaded once to Max.

(b) Weighing test [2(8)(i)(e-1)] :

Apply substitution material from zero up to and including Max, and then remove the material back to zero. When determining the initial intrinsic error, at least ten different load values are selected, and for other weighing tests at least five are selected. The values of the loads selected shall include Max and Min, and values at or near those at which the maximum permissible error (mpe) changes.

It should be noted that when loading or unloading weights the load must be respectively increased or decreased in a uniform progression.

(iii) Discrimination test [2(8)(i)(vi)] :

The following tests are performed with three different loads, e.g. Min, 0.5 Max and Max.

A load plus sufficient substitution material (e.g. 10 times 0.1 d) is placed on the load receptor. The additional material is then successively removed until the indication, I, is decreased unambiguously by one actual scale interval, I-d. Replace substitution material equivalent to 0.1 d and then a load equal to 1.4 d shall be gently placed on the load receptor and the result will be increased by one actual scale interval above the initial indication, I + d.

Example : instrument with d = 10g

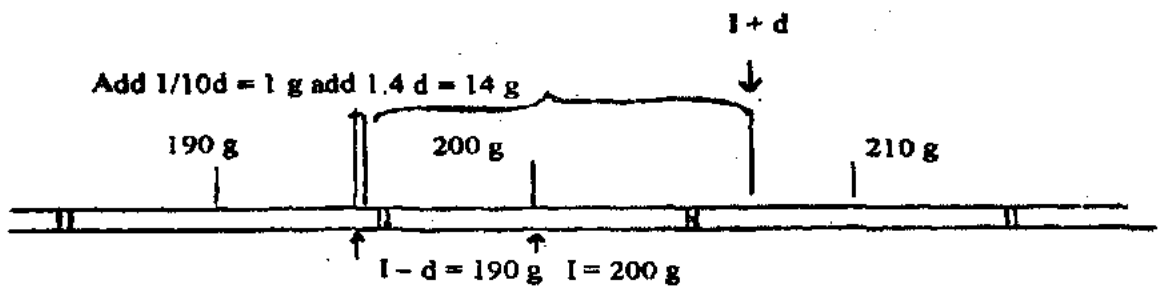

The indication at start is I = 200g. Remove additional weights until the indication changes to I - d = 190g. Add 0.1d - 1g and thereafter 1.4 d = 14g. The indications must then be

I + d = 210g.

7. Additional functionality

(1) Warm-up time test [4(3)(v)]

(i) Disconnect the instrument from the power supply for a period of at least 8 hours prior to the test.

(ii) Reconnect the instrument and switch on while observing the indicating device. Verify that it is not possible to initiate automatic weighing or printout until the indication has stabilized or until completion of the warm-up time if this is specified by the manufacturer.

(iii) As soon as the indication of the indicating device has stabilized, set the instrument to zero and determine the error of zero-setting.

(iv) Apply a load close to Max. Determine the error by the method in paragraph 4(2) of this Annexure.

(v) Repeat stages (3) and (4) after 5, 15 and 30 minutes.

(2) Agreement between indicating and printing devices [2(7)].

During the course of the tests verify that for the same load, the difference between any two indicating devices having the same scale interval is as follows:

Zero for digital indicating or printing devices;

Not greater than the maximum permissible error for weighing-in-motion for analogue devices.

8. Influence factor tests

SUMMARY OF TESTS

Test	Characteristics *under test*	Conditions applied
(1) Static temperature	Influence factor	mpe(*)
(2) Damp heat, steady state	Influence factor	mpe
(3) Mains power supply voltage variation (AC)	Influence factor	mpe
(4) Battery power supply Voltage variation (DC)	Influence factor	mpe

(*) mpe : maximum permissible error

(1) Static temperature tests [2(9)(i)] :

Static temperature tests are carried out according to Table V.

TABLE V

Environmental Phenomena	*Test Specification*
Temperature	Reference of 20°C Specified high for 2 hours Specified low for 2 hours 5°C Reference of 20°C

Supplementary information to the test procedure

Object of the test : To verify compliance with the provisions in paragraph 2(9)(i) of part II under conditions of dry heat (non-condensing) and cold.

Test procedures in brief :

Precondition : 16 hours

Condition of the EUT : Normal power supplied and "on" for a time period equal to or greater than the warm-up time specified by the manufacturer. Power is to be "on" for the duration of the test.

Stabilization : 2 hours at each temperature under "free air" conditions.

Temperature : As specified in paragraph 2(9)(I) of part II.

Temperature sequence : Reference temperature of 20°C; Specified high temperature; Specified low temperature; A temperature of 5°C; Reference temperature of 20°C.

Number of test cycles : At least one cycle.

Weighing test : Adjust the EUT as close to zero indication as practicable prior to the test (if an automatic zero-tracking device is connected, adjust it to a value near zero). The EUT shall not be readjusted at any time during the test.

After stabilization at the reference temperature and again at each specified temperature, apply at least five different test loads or simulated loads and record:

(a) date and time;

(b) temperature;

(c) relative humidity;

(d) test load;

(e) indications (as applicable);

(f) errors;

(g) functional performance.

Maximum allowable variations : All functions shall operate as designed. All errors shall be within the maximum permissible errors specified in Table II.

(2) Damp heat, steady state [4(3)(iii)]

Damp heat, steady state tests are carried out according to Table VI.

TABLE VI

Environmental Phenomena	*Test specification*
Damp heat, Steady state	Upper limit temperature and relative humidity of 85% for 2 days (48 hours)

SUPPLEMENTARY INFORMATION TO THE TEST PROCEDURE

Object of the test : To verify compliance with the provisions in paragraph 4(1)(i) of part II under conditions of high humidity and constant temperature.

Precondition : None required.

Condition of the EUT : Normal power supplied and "on" for a time period Equal to or greater than the warm-up time specified by the manufacturer. Power is to be "on" for the duration of the test.

Adjust the EUT as close to zero indication as Practicable prior to the test (if an automatic zero-tracking device is connected, adjust it to a value near zero). The EUT shall not be readjusted at any time during the test.

The handling of the EUT shall be such that no condensation of water occurs on the EUT.

Stabilization : 3 hours at reference temperature and 50% humidity.

2 days (48 hours) at the upper limit temperature as specified in paragraph 2(9)(i) of part II.

Temperature : Reference temperature of 20°C and at the upper limit as specified in paragraph 2(9)(i) of part II.

Relative humidity : 50% at reference temperature;

85% at upper limit temperature.

Temperature-humidity sequence : Reference temperature of 20°C at 50% humidity;

The upper limit temperature at 85% humidity;

Reference temperature of 20°C at 50% humidity.

Number of test cycles : At least one cycle.

Weighing test and test sequence : After stabilization of the EUT at reference temperature and 50% humidity, apply at least five different test loads or simulated loads and record:

(a) date and time;

(b) temperature;

(c) relative humidity;

(d) test load;

(e) indications (as applicable);

(f) errors;

(g) functional performance

Increase the temperature in the chamber to the upper limit and increase the relative humidity to 85%. Maintain the EUT at no load for a period of 2 days (48 hours). Following the 2 days, apply at least five test loads and record the data as indicated above. Allow full recovery of the EUT before any other tests are performed.

Maximum allowable variations : All errors shall be within the maximum permissible errors specified in Table II.

(3) Mains power supply voltage variation (AC) [2(9)(ii)]

Power voltage variation tests are carried out according to Table VII.

TABLE VII

Environmental phenomena	*Test specification*
Voltage variation	Reference voltage
	Reference voltage+10%
	Reference voltage–15%
	Reference voltage

SUPPLEMNTARY INFORMATION TO THE TEST PROCEDURES

Object of the test : To verify compliance with the provisions in paragraph 2(9)(ii) of part II under conditions of voltage variations.

Test procedures in brief :

Precondition : None required.

474 GI/11-112

Condition of the EUT : Normal power supplied and "on" for a time period equal to or greater than the warm-up time specified by the manufacturer. Power is to be "on" for the duration of the test.

Adjust the EUT as close to zero indication as practicable prior to the test. If it has an automatic zero-setting function then the instrument should be set to zero after applying each level of voltage.

Number of test cycles : At least one cycle.

Weighing test : The EUT shall be tested at no load and with one test load or simulated load between 50% and maximum capacity of the EUT.

Test sequence : Stabilize the power supply at the reference voltage within the defined limits and record:

(a) date and time;

(b) temperature;

(c) relative humidity;

(d) power supply voltage;

(e) test loads;

(f) indications (as applicable);

(g) errors;

(h) functional performance.

Repeat the test weighing for each of the voltages and record the indications.

Maximum allowable variations : All functions shall operate as designed. All errors shall be within the maximum permissible errors specified in Table II.

8(4) Battery power supply voltage variation (DC) [2(9)(iii) and 4(3)(viii)]

Test method : Variation in DC power supply. Where the EUT continues to operate below the stated battery voltage, the following test shall be conducted using an equivalent variable DC power source.

Object of the test : To verify compliance with the provisions in paragraph 2(9)(iii) and 4(3)(viii) of part II under conditions of varying DC power supply. The requirements shall be met either by use of an equivalent variable DC power source or by allowing the battery voltage to fall by use.

Reference to standard : No reference to international standards can be given at the present time.

Test procedures in brief : The test consists of subjecting the EUT to DC power variations when the former is operating under normal atmospheric conditions with one test load or simulated load between 50% and maximum capacity of the EUT.

Test severity : Supply voltage: lower limit, the voltage at which the EUT clearly ceases to function (or is automatically put out of service) + 2% of this voltage.

Number of test cycles : At least one cycle.

Conduct of the test :

Precondition : None required.

Test equipment : Variable DC power source;

Calibrated voltmeter;

Load cell simulator, if applicable.

Condition of the EUT : Normal power supplied and "on" for a time period equal to or grater than the warm-up time specified by the manufacturer.

Adjust the EUT as close to zero indication as practicable prior to the test. If it has an automatic zero-setting function as part of the automatic weighing process, then the instrument should be set to zero after applying each level of voltage.

Test sequence : Stabilize the power supply at nominal battery voltage ±2% and record the following data at no load and with one load or simulated load between 50% and maximum capacity of the EUT:

(a) date and time;

(b) temperature;

(c) relative humidity;

(d) power supply voltage;

(e) test load;

(f) indications (as applicable);

(g) errors;

(h) functional performance.

Reduce the power supply to the EUT until the equipment clearly ceases to function and note the voltage. Switch the EUT "off" and increase the power supply voltage to nominal battery voltage ±2%. Switch the EUT "on" and reduce the power supply voltage to the above noted voltage (out of service voltage) + 2% of the noted voltage. Record the data indicated above.

Maximum allowable variations : All functions shall operate as designed. All errors shall be within the maximum permissible errors specified in Table II.

9. Disturbance tests 4(1)(ii) and 4(3)(iv)

SUMMARY OF TESTS

Test	*Characteristic under test*	*Conditions applied*
1. Voltage dips and short Interruptions	Disturbance	sf(*)
2. Electrical fast transients/burst immunity	Disturbance	sf
3. Electrostatic discharge	Disturbance	sf
4. Electromagnetic susceptibility	Disturbance	sf

(*) sf : value of the significant fault [see 4(2)(v) of part I.]

(1) Voltage dips and short interruptions

Short time power reduction (voltage dips and short interruptions) tests are carried out according to Table VIII.

TABLE VIII

Environmental phenomena	*Test Specification*
Voltage dips and short	Interruption from reference voltage to zero voltage for one half cycle Interruption from reference voltage to 50% of reference voltage for two half cycles These mains voltage interruptions shall be repeated ten times with a time interval of at least 10 seconds

SUPPLEMENTARY INFORMATION TO THE TEST PROCEDURES

Object of the test : To verify compliance with the provisions in paragraph 4(1)(ii) of part II under conditions of short time mains voltage interruptions and reductions.

Test procedures in brief :

Precondition : None required.

Condition of the EUT : Normal power supplied and "on" for a time period equal to or greater than the warm-up time specified by the manufacturer.

Adjust the EUT as close to zero indication as practicable prior to the test. The EUT shall not be re-adjusted at any time during the test except to reset if a significant fault has been indicated.

Number of test cycles : At least one cycle.

Weighing test and test sequence : Stabilize all factors at nominal reference conditions. Apply one load or simulated load between 50% and maximum capacity of the EUT and record:

(a) date and time;

(b) temperature;

(c) relative humidity;

(d) power supply voltage;

(e) test load;

(f) indications (As applicable);

(g) errors;

(h) functional performance.

Interrupt the power supply to zero voltage for a period equal to one half cycle and conduct the test. During interruption observe the effect on the EUT and record as appropriate.

Reduce the power supply to 50% of nominal voltage for a period equal to two half cycles and conduct the test. During reductions observe the effect on the EUT and record, as appropriate.

Maximum allowable variations : The difference between the weight indication due to the disturbance and the indication without the disturbance either shall not exceed the values given in paragraph 4(2)(v) of part I, or the EUT shall detect and act upon a significant fault.

(2) Electrical fast transients/burst immunity

Electrical fast transients/burst immunity tests are carried out for 2 minutes with a positive polarity and for 2 minutes with a negative polarity and according to Tables IX, X and XI.

TABLE IX

PORTS FOR SIGNAL LINES AND CONTROL LINES

Environmental phenomena	*Test specification*
Fast transient common mode	0.5 k V (peak) 5/50 ns T_r/T_h 5 kHz rep. frequency

Note : Applicable only to ports or interfacing with cables whose total length may exceed 3m according to the manufacture's functional specification.

TABLE X

INPUT AND OUPUT DC POWER PORTS

Environmental phenomena	*Test specification*
Fast transient common mode	0.5 k V (peak) 5/50 ns T_1/T_h 5 kHz rep. frequency

Note: Not applicable to battery operated appliances that cannot be connected to the mains while in use.

TABLE XI

INPUT AND OUTPUT AC POWER PORTS

Environmental phenomena	*Test specification*
Fast transient common mode	0.5 k V (peak) 5/50 ns T_1/T_h 5 $_kH_z$ rep. frequency

Note: Not applicable to battery operated appliances that cannot be connected to the mains while in use.

A coupling/decoupling network shall be applied for testing AC power ports.

SUPPLEMENTARY INFORMATION TO THE TEST PROCEDURES

Object of the test: To verify compliance with the provisions in paragraph 4(1)(ii) of part II under conditions where fast transients are super-imposed on the mains voltage, interruptions and reductions.

Test procedures in brief:

Precondition: None required.

Condition of the EUT: Normal power supplied and "on" for a time period equal to or greater than the warm-up time specified by the manufacturer.

Adjust the EUT as close to zero indication as practicable prior to the test. The EUT shall not be re-adjusted at any time during the test except to reset if a significant fault has been indicated.

Stabilization: Before any test stabilize the EUT under constant environmental conditions.

Weighing test: Stabilize all factors at nominal reference conditions. Apply one load or simulated load between 50% and maximum capacity of the EUT and record the following with and without the transients:

(a) date and time;

(b) temperature;

(c) relative humidity;

(d) test load;

(e) indications (as applicable);

(f) errors;

(g) functional performance.

Maximum allowable variations: The difference between the weight indication due to the disturbance and the indication without the disturbance either shall not exceed the value given in paragraph 4(2)(v) of part I or the instrument shall detect and act upon a significant fault.

(3) Electrostatic discharge

Electrostatic discharge tests are carried out with test signals and conditions as given in Table XII.

TABLE XII

Environmental phenomena	*Test specification*
Electrostatic discharge	8 kV air discharge 6 kV contact discharge

Note: The 6 kV contact discharge shall be applied to accessible conductive parts. Metallic contacts e.g. in battery compartments or in socket outlets are excluded from this requirement.

Contact discharge is the preferred test method. 20 discharges (10 with positive and 10 with negative polarity) shall be applied on each accessible metal part of the enclosure. The time interval between successive discharges shall be at least 10 seconds. In the case of a non-conductive enclosure, discharges shall be applied on the horizontal or vertical coupling planes. Air discharges shall be used where contact discharges cannot be applied. Tests with other (lower) voltages than those given in Table X are not required.

SUPPLEMENTARY INFORMATION TO THE TEST PROCEDURES

Object of the test: To verify compliance with the provisions in paragraph 4(1)(ii) of part II under conditions where electrostatic discharges are applied.

Test procedures in brief:

Precondition: None required.

Condition of the EUT: Normal power supplied and "on" for a time period equal to or greater than the warm-up time specified by the manufacturer.

Adjust the EUT as close to zero indication as practicable prior to the test. The EUT shall not be re-adjusted at any time during the test except to reset if a significant fault has been indicated.

Stabilization: Before any test stabilize the EUT under constant environmental conditions.

Weighing test: Stabilize all factors at nominal reference conditions. Apply one load or simulated load between 50% and maximum capacity of the EUT and record the following with and without electrostatic discharge:

(a) date and time;

(b) temperature;

(c) relative humidity;

(d) test load;

(e) indications (as applicable);

(f) errors;

(g) functional performance.

Maximum allowable variations: The difference between the weight indication due to the disturbance and the indication without the disturbance either shall not exceed the value given in paragraph 4(2)(v) of part I or the instrument shall detect and act upon a significant fault.

10. Span stability test (4)(iii)

SUMMARY OF TEST

Test	*Characteristic under test*	*Condition applied*
Span stability	Stability	1/2 absolute mpe(*)

(*) mpe: maximum permissible error on initial verification in Table II. Note: The maximum permissible error for the zero point shall also be taken into consideration.

Test method: Span stability.

Object of the test: To verify compliance with the provisions in paragraph 4(4)(iii) after the EUT has been subjected to the performance tests.

Reference to standard: No reference to international standards can be given at the present time.

Test procedures in brief: The test consists of observing the variations of the error of the EUT or simulator under sufficiently constant ambient conditions (reasonable constant conditions in a normal laboratory environment) at various intervals: before, during, and after the EUT has been subjected to performance tests.

The performance tests shall include the temperature test and, if applicable, the damp heat test; an endurance test shall not be included. Other performance tests listed in this Annex may be performed.

The EUT shall be disconnected twice from the mains power supply (or battery supply where fitted) for at least 8 hours during the period of the test. The number of disconnections may be increased if so specified by the manufacturer or at the discretion of the approval authority in the absence of any specification.

In the conduct of this test, the operating instructions for the instrument as supplied by the manufacturer shall be considered.

The EUT shall be stabilized at sufficiently constant ambient conditions after switch-on for at least five hours, and at least 16 hours after the temperature and damp heat tests have been performed.

Test severities:

Test duration:

28 days or the time period necessary to conduct the performance tests, whichever is less.

Time (t) between tests (days): $0.5 \leq t \leq 10$.

Test load: near maximum capacity (Max): the same test weights shall be used throughout the test.

Maximum allowable variations: The variation in the errors of indication shall not exceed half the absolute value of the maximum permissible error in Table II for the test load applied on any of the n measurements.

Number of test(n): At least 8 except where the differences of the results indicate a trend more than half the allowable variation specified, the measurements shall be continued until the trend comes to rest or reverses itself, or until the error exceeds the maximum allowable variation.

Precondition: None required.

Condition of the EUT: Normal power supplied and "on" for a time period equal to or greater than the warm-up time specified by the manufacturer.

Adjust the EUT as close to zero indication as practicable before each test. The automatic zero-tracking should be made inoperative during the test (if the EUT is so equipped).

Test sequence: Stabilize all factors at nominal reference conditions.

Adjust the EUT as close to zero as possible.

Automatic zero-tracking shall be made inoperative and the automatic built-in span adjustment device shall be made operative.

Initial measurement

Determine the span error using the following method:

1. Determine the initial zero error (E_o)

If necessary disable any automatic zero-setting or zero-tracking devices, by placing a "zero weight" of for example 10 times the scale interval on the load receptor. Note the indication at zero (Io).

Either by use of an indicator with a suitable higher resolution scale interval or using the change point weight method in paragraph 4(2)(ii) of Annexure A (noting the total addition change point weight • Lo) determine and record the initial zero error (E_o).

474 GI/11-113

2. Determine the error at near Max capacity (EL)

Carefully remove the change point weights (if used) and apply the test load (or simulated load) and note the indication (I_L).

Either by use of an indicator with a suitable higher resolution scale interval or using the change point weight method in paragraph 4(2)(ii) of Annexure A (noting the total addition change point weight • Lo) determine and record the error at near Max capacity (E_L).

Record:

(a) date and time;

(b) temperature;

(c) barometric pressure;

(d) relative humidity;

(e) value of 0.1 d;

(f) test load;

(g) total of added change point weights at zero load L_0;

(h) total of added change point weights at test load L;

(i) the following indications:

- indication at zero (Io);
- the indication of test load (IL_L);

(j) calculate;

- initial zero error E_0;
- error at test load (E_L).

(k) change in location

and apply all necessary corrections resulting from variations of temperature, pressure, etc. between the various measurements.

Immediately repeat steps 1 and 2 four more times and determine and record the average value of the error for the five tests.

Subsequent measurements

After observing the time between measurements requirement repeat the test sequence 1 to 2 once recording the data above unless:

- either the result is outside the maximum allowable variation, or
- the range of the five readings of the initial measurement is more than 0.1 d, in which case continue four more times repeating steps 1 and 2 recording the data above and determine and record the average value of the error of the five tests.

The measurements shall continue until there are at least 8 measurements except where the differences of the results indicate a trend more than half the allowable variation specified, the measurements shall be continued until the trend comes to rest or reverses itself, or until the error exceeds the maximum allowable variation.

11. In-situ tests

(1) General:

Note the accuracy class required for wagon weighing and train weighing.

Ensure that the desired scale interval and the maximum wagon weight comply with Table III Check that the minimum capacity complies with paragraph 2(4) of part II.

Check that the minimum wagon weight complies with paragraph 2(5) of part II.

For pattern evaluation, testing may be carried out for coupled weighing, uncoupled weighing or train weighing depending on the approval required by the applicant.

For initial verification, tests shall be carried out corresponding to the normal site operation of the instrument.

(2) Rail alignment:

If exemption from the alignment calibration at Annexure B is required, alignment of ±1 mm must be demonstrated to the satisfaction of the metrological authority by means of:

- survey by the authority;
- submission of independent survey results;
- other mutually acceptable procedure.

(3) Control Instrument:

Establish whether or not the instrument is to be used as the control instrument. If it is to be used as the control instrument it shall comply with paragraph 2(8)(iii)(b) of part II.

If not the static weighing [2(8)(i)] shall be omitted.

If wagons have to be moved over some distance from the control instrument to the EUT, the conditions must be closely controlled. Differences in weather conditions will cause errors which will not be determinable and so this should be avoided where possible.

(4) Static weighing [2(8)(i)]:

Apply test loads from zero up to and including Max, then remove the test loads back to zero. Ensure that the error is recorded at change in load (normally in steps of one tonne). Ensure that errors are recorded in line with paragraph 4(2) of Annexure A. Record the errors and compare them to the limits in Table II.

(5) Eccentricity tests [2(8)(i)(e-III)]:

Apply the eccentricity test only where it is practical and safe to do so. On installations where the weighed length is very short it may not be possible to apply this test fully. If so note the reduced load.

(6) Coupled weighing [5(1)(iii)(a-II)]

(i) *Static weighing (empty):*

Select the required number of reference wagons as in Table IV and weigh them individually, statically and uncoupled on the control instrument.

Any errors shall not exceed the appropriate mpe as given in Table I.

(ii) *Coupled wagon weighing (empty):*

Record the wagon weights of the coupled reference wagons, in-motion [6(2)] as they are displayed or printed by the instrument under test at a variety of speeds up to the maximum. Record the errors.

The instrument under test must behave correctly for the condition of operating speed [3(4)(iv)]. The printer shall not print the weight of any wagon that has travelled over the load receptor at a speed outside the range of operating speeds. An appropriate indication shall be included on the printout for any wagon weight not printed. A sub-total may be printed exclusive of wagons which have not been weighed provided that it is indicated it is not the total train weight.

The instrument shall also operate in the following manner in the case of rollback [3(4)(v)]. The roll-back condition shall be detected automatically and the weighing process shall be aborted, i.e. the instrument shall either:

(a) not indicate or print any weighing result, or

(b) give a clear indication that any indicated or printed weighing result may not be correct.

Repeat the in-motion tests to obtain not less than 60 wagon weights.

(iii) *Static weighing (full):*

Select the required number of reference wagons (see Table IV) and weighs them individually, statically and uncoupled on the control instrument.

Take note of the need to only particularly fill some of the wagons.

Any errors shall not exceed the appropriate mpe as given in Table I.

(iv) *Coupled wagon weighing (full):*

Record the wagon weights of the coupled reference wagons, in-motion as they are displayed or printed by the instrument under test at a variety of speeds up to the maximum. Record the errors.

The instrument under test must behave correctly for the condition of operating speed 3(4)(iv). The printer shall not print the weight of any wagon that has travelled over the load receptor at a speed outside the range of operating speeds. An appropriate indication shall be included on the printout for any wagon weight not printed. A sub-total may be printed exclusive of wagons which have not been weighed provided that it is indicated it is not the total train weight.

The instrument shall also operate in the following manner in the case of rollback 3(4)(v). The roll-back condition shall be detected automatically and the weighing process shall be aborted i.e. the instrument shall either:

(a) not indicate or print any weighing result, or

(b) give a clear indication that any indicated or printed weighing result may not be correct.

(7) Uncoupled weighing [5(1)(iii)(a-1)].

(i) *Static weighing:*

Select not less than 5 wagons and fill them with a range of loads from zero load to that of a fully loaded wagon and weigh them statically on the control instrument.

(ii) *Uncoupled wagon weighing:*

Record the wagon weights of the uncoupled reference wagons, in-motion, as they are displayed or printed by the instrument under test at variety of (controlled) speeds including near Max, near Min and the typical site operating speed. Record the errors.

The instrument under test must behave correctly for the condition of operating speed 3(4)(iv). The printer shall not print the weight of any wagon that has travelled over the load receptor at a speed outside the range of operating speeds. An appropriate indication shall be included on the printout for any wagon weight not

printed. A sub-total may be printed exclusive of wagons which have not been weighed provided that it is indicated it is not the total train weight.

A minimum of 5 weight printouts of each wagon shall be obtained.

(8) Train weighing

Tests are the same as in paragraph 11(6) of this Annexure and may be carried out in conjunction with paragraph 11(6) of this Annexure without repeating the test, if both modes of operation are required.

The weights of the reference wagons shall be summed and any errors shall not exceed the appropriate mpe as given in Table I and applied to the summation.

ANNEX B

ALIGNMENT CALIBRATION OF SINGLE-AXLE WEIGHING INSTRUMENT

The alignment calibration is not recommended as an adequate substitute for verification of reference wagons by full draught weighing and shall only be applied under the conditions in paragraph 2(8)(iii)(b) of part II.

1. The alignment calibration applies to instruments that operate by partial weighing of two-axle wagons and the same instrument is required for use as the control instrument for the purposes of determining the mass of reference wagons in paragraph 2(8)(iii)(b) of part II.

2. Instruments that operate by partial weighing are exempt from the alignment calibration procedure provided the following:—

- the top surface of both rails along the length of the weight zone are vertically aligned to ±1 mm, and
- the alignment has been checked along both rails at not less than two positions on the load receptor and not less than two positions within a wagon length from the load receptor on each associated apron.

3. For instruments not covered by para 2 of Annexure B, a calibration correction shall be determined by application of the alignment calibration procedure in para 4 of Annexure B. This calibration correction shall be added to each totalized wagon weight to determine the mass of each reference wagon.

4. The alignment calibration is conducted with the use of a single empty uncoupled wagon of a wheelbase similar to those wagons used for in-motion testing. An example of an alignment calibration is given in para 5 of Annexure B.

(1) While motionless, each axle shall be weighed in the centre and at each end of the load receptor.

(2) The six weight indications noted in para 4(1) of Annexure B shall be summed up and the result divided by three.

(3) Standard weights, as specified in para 4(4) of Annexure B shall be evenly distributed over the empty wagon and the weighing procedure in para 4(1) and (2) of Annexure B shall be repeated.

(4) The sum of the standard weights referred to in para 4(3) of annexure B shall be at least equal to the larger of the following values:—

- the difference between the maximum capacity and 1.5 times the weight of the wagon as determined in para 4(2) of Annexure B with the result rounded down to the nearest 1 tonne;
- 10 tonne.

(5) The difference between the results of the computations in accordance with para 4(2) and (3) of Annexure B shall be subtracted from the total value of the standard weights, the result being the calibration correction.

5. Example of alignment calibration test sheet

Accuracy class: 1

Maximum capacity: a = 35t

Typical wagon tare weight: b = 11.5t

Mass of standard weights required: c = 17t

(a - 1.5b, rounded down)

Scale interval: 0.1 t

Scale interval for stationary load: 0.01 t

TABLE XII

Position on load receptor		*Indicated weight (t)*	
		Empty	Loaded wagon
First axle	Leading end	5.76	14.27
	Middle	5.75	14.26
	Trailing end	5.75	14.26
Second axle		5.75	14.25
		5.75	14.25
		5.74	14.24
Total of six weighings		34.50	85.53
Divide total by three		d = 11.50e = 28.51	
Derived mass of standard weights		f = e - d = 17.01	
Calibration		c - f = -0.01	

The calibration correction shall be added to the totalized indicated weight of each reference wagon weighed while stationary and uncoupled. In the case given above, the minus sign should be noted. Therefore, if the totalized indicated weight is 41.38, the corrected weight will be:

41.38 + (-0.01) = 41.37

Note: The calibration correction computed in this example is not intended to be typical.

SEVENTH SCHEDULE

HEADING—D

AUTOMATIC GRAVIMETRIC FILLING INSTRUMENTS

PART I

1. General definitions

(1) Weighing instrument:

Measuring instrument that serves to determine the mass of a load by using the action of gravity on that load. According to its method of operation, a weighing instrument is classified as automatic or non-automatic.

(2) Automatic weighing instrument:

An instrument which weighs without the intervention of an operator and follows a predetermined programme of automatic process characteristic of the instrument.

(3) Automatic gravimetric filling instrument:

An instrument which fills containers with predetermined and virtually constant mass of product from bulk by automatic weighing, and which comprises essentially an automatic feeding device or devices associated with one or more weighing units and the appropriate control and discharge devices.

(i) *Associative (selective combination) weigher:*

Automatic gravimetric filling instrument comprising one or more weighing units and which computes an appropriate combination of the loads and combines them for subsequent discharge as a fill.

(ii) *Cumulative weigher:*

Automatic gravimetric filling instrument with one weighing unit with the facility to affect the fill by more than one weighing cycle.

(iii) *Subtractive weigher:*

Automatic gravimetric filling instrument for which the fill is determined by controlling the output feed from the weigh hopper.

(4) Fill:

One or more loads discharged into a single container to make up the predetermined mass.

(5) Electronic instrument:

An instrument equipped with electronic devices

(6) Control instrument:

A weighing instrument used to determine the mass of the test fills delivered by the filling instrument.

2. Construction

Note: In this Part the term device is applied to any part which uses any means to perform one or more specific functions.

(1) Principal parts

(I) *Weighing units:*

A device which provides information on the mass of the load to be measured. This devise may consist of all or parts of non-automatic weighing instruments.

(ii) *Local receptor:*

Part of measurement instrument intended to receive the load.

(iii) *Feeding device:*

Device which provides the supply of the product from bulk to the weighing unit. It may operate in one or more stages.

(iv) *Control devices*

(a) Feed control device—Device which regulates the rate of the feed of the feeding device

(b) Fill setting device—Device which allows the setting of the pre-set value

(c) Final feed cut off device—Device which controls the cut off the final feed so that the average mass of the fills corresponding to the preset value. This device may include an adjustable compensation for the material in flight.

(d) Correction device—Device, which automatically corrects the setting of the filling instrument.

(2) Electronic parts

(I) *Electronic device:*

A device comprising electronic assemblies

474 GI/11-114

and performing a specific function. Electronic devices are usually manufactured as separate units and capable of being independently tested.

(ii) *Electronic sub-assembly:*

A part of an electronic device employing electronic components and having a recognizable function of its own.

(iii) *Electronic components:*

The smallest physical entity that uses the electron or hole conduction in semi-conductors, gases or in a vacuum.

(3) Indicating device:

The part of a measuring instrument that displays an indication.

Notes: 1. For a weighing instrument, the indicating device is a set of components, which displays the value, in units of mass, of the result of a weighing operation.

2. For filling instrument, the indicating device may indicate either the mass of the load or difference between the mass and the preset value provided the intention is made clear.

(4) Ancillary devices

(i) *Zero setting device:*

A device for setting the indicating device to zero when the load receptor is empty.

(a) Non automatic zero setting device—A device for setting the indicating device to zero by an operator

(b) Semi automatic zero setting device—A device for setting the indicting device to zero automatically following a manual command

(c) Automatic zero setting device—A device for setting the indicating device to zero automatically without the intervention of an operator.

(ii) *Tare device*:

A device for setting the indication to zero when a load is on the load receptor

(a) without altering the weighing range for net loads (additive tare device),

or

(b) reducing the weighing range for net loads (subtractive tare device).

3. Metrological characteristics

(1) Scale interval (d):

Value expressed in units of mass, of the difference between—

(a) the values corresponding to two consecutive scales mark for analogue indication.

(b) two consecutive indicated values for digital indication.

(2) Reference particle mass of a product:

Mass equal to the mean of ten of the largest elementary particles or pieces of the product taken from one or more loads.

(3) Pre set value:

Value, expressed in units of mass, preset by the operator by means of the fill setting device, in order to define the nominal value of the fills.

(4) Static set point:

Value of the test weights or masses, which, in static tests, balance the value, selected on the indication of the fill setting device.

(5) Weighing cycle:

The sequence of the operation which includes:

(a) delivery of the material to the load receptor;

(b) a weighing operation; and

(c) the discharge of a single discrete load.

(6) Final feed time:

Time taken to complete the last stage of delivery of the product to a load receptor.

(7) Minimum capacity (min):

Smallest discrete load that can be weighed automatically on a load receptor.

(8) Maximum capacity (max):

The largest discrete load that can be weighed automatically on a load receptor.

(9) Warm up time:

The time between the moment power is applied to an instrument and the moment at which the instrument is capable of complying with the requirements.

(10) Average number of loads per fill:

Half the sum of the maximum and minimum number of loads per fill that can be set by the operator or, in cases where the number of loads per fill is not directly determined by the operator, either the

means of the actual number of loads per fill (if known) in a period of normal operation, or the optimum number of loads per fill as may be specified by the manufacturer for the type of product which is to be weighed.

(11) Rated minimum fill:

The rated value of the fill below which the weighing results may be subject to errors outside the limits specified in this part.

(12) Minimum discharge:

The smallest load that can be discharged by a subtractive weigher.

4. Indications and errors

(1) Methods of indication

(i) *Analogue indication:*

An indication allowing the evaluation of equilibrium position to a fraction of the scale interval.

(ii) *Digital indication:*

An indication in which the scale mark comprises a sequence of an aligned figure that do not permit interpolation to fraction of a scale interval.

(2) Errors

(i) *Error of indication:*

The indication of an instrument minus the (conventional) true value of the mass.

(ii) *Intrinsic error:*

The error of an instrument under reference conditions

(iii) *Initial intrinsic error:*

The intrinsic error of an instrument as determined prior to performance and span stability tests.

(iv) *Fault:*

The difference between the error of indication of an instrument and the intrinsic error.

Note: Principally, a fault is the result of an undesired change of data contained in or flowing an electronic instrument.

(v) *Significant fault:*

A fault greater than 0.25 of the maximum permissible deviation of each fill [as specified in sub-paragraph (2) of para 2] for an in-service verification, for a fill equal to the rated minimum fill.

Note: The following are not considered to be significant faults even when they exceed the value defined above:

(a) Faults arising from simultaneous and mutually independent causes in the instrument.

(b) Faults implying the impossibility to perform any stage of operation.

(c) Faults being so serious that they are bound to be noticed by an operator.

(d) Transitory faults bring momentary variations in the indication or operation which cannot affect the final results of the automatic cycles.

Note: For instruments where the fill may be greater than one load, the value of significant fault applicable for a test on one static load shall be calculated in accordance with the test procedures.

(vi) *Span stability:*

The capability of an instrument to maintain the difference between the indication of weight at maximum capacity and the indication at zero within specified limits over a period of use.

(3) Reference value for accuracy class

The value of accuracy class determined by static testing of the weighing unit during influence quantity testing at pattern approval stage. The reference value for accuracy class is equal to the best accuracy class for which the instrument may be verified for operational use.

5. Influences and reference conditions

(1) Influence quantity

A quantity, which is not the subject of the measurement but which influences the value of measurand or the indication of the instrument.

(i) *Influence factor:*

An influence quantity having a value within the specified rated operating conditions of the instrument.

(ii) *Disturbance:*

An influence quantity having a value within the limits specified in this Part but outside the rated operating conditions of the instrument

(2) Rated operating conditions

Conditions of use, giving the ranges of the measurand and the influence quantities for which the metrological characteristics are intended to lie within the maximum permissible deviation specified.

(3) Reference conditions

A set of specified values of influence factors fixed to ensure valid inter-comparison of the results of measurements.

6. Tests

(1) Material test:

A test carried out on a complete instrument using the type of material, which it is intended to weigh.

(2) Simulation tests:

A test carried out on a complete instrument or a part of an instrument in which any part of the weighing operation is simulated.

(3) Performance test:

A test to verify whether the equipment under test (EUT) is able to accomplish its intended functions

(4) Span stability test:

A test to verify that the EUT is capable of maintaining its performance characteristics over a period of use.

PART II

1. General

(1) Scope:

This Part specifies the metrological and technical requirements for automatic gravimetric filling instruments (hereafter called "filling instruments"), which sub-divide a bulk product into fills of predetermined and virtually constant mass by automatic weighing, the fills being kept separate.

Note: (1) This specification places no constrain on the maximum or minimum capacities of the instruments for which this specification is applicable. (2) Filling instruments may also be required to comply with certain requirements e.g. an instrument which could operate as a non-automatic instrument will need to comply with the specification for non-automatic weighing instruments.

2. Metrological requirements

(1) Accuracy classes

The accuracy class and reference value for accuracy class shall be specified in accordance with sub-paragraph (2) of paragraph 2 and marked on the instrument in accordance with sub-paragraph (10) of paragraph 3.

Accuracy class shall be specified for intended usage, i.e. nature of the product to be weighed, type of installation, value of the fill, and operating rate.

Note: The limitation of accuracy classes to certain application may be determined by these Rules.

(2) Limits of error

(i) *Maximum permissible error for static tests:*

This instrument shall have a reference value for accuracy class Ref (x), applicable for static testing only, for which the maximum permissible error for influence factor tests shall be as specified in sub-paragraph (4) of paragraph 2, multiplied by the class designation factor (x).

(ii) *Maximum permissible deviation of each fills:*

The instrument shall have a specified accuracy class X(x) for which the maximum permissible deviation of each fill from the average shall be equal to the limits specified in Table I given below, multiplied by the class designation factor (x).

(x) shall be 1×10^k, 2×10^k, 5×10^k, k being a positive or negative whole number or zero.

TABLE 1

Value of the mass of the fill M(g)	*Maximum permissible deviation of each fill from the average for class X (1)*	
	Initial verification	In service Inspection
M < 50	6.3%	9%
50 < M < 100	3.15g	4.5g
100 < M < 200	3.15%	4.5%
200 < M < 300	6.3g	9g
300< M < 500	2.1%	3%
500 < M < 1000	10.5g	15g
1000 < M < 10000	1.05%	1.5%
10000 < M < 15000	105g	150%
15000 < M	0.7%	1%

(See Table 2 under sub-paragraph (3) of para

6 for the number of fills required to find the average value)

For in-service testing, when the reference particle mass exceeds 0.1 of the maximum permissible in-service deviation, the values derived from Table 1 shall be increased by 1.5 times the value of the reference particle mass. However, the maximum value of the maximum permissible deviation shall not exceed (x) x 9%.

Note: Particle mass correction is not applicable to limits, which are derived from Table 1, e.g. influence quantity test, zero setting, etc.

(3) Maximum permissible preset value error (setting error):

For instruments where it is possible to preset a fill weight the maximum difference between the preset value and the average mass of the fill shall not exceed 0.25 of the maximum permissible deviation of each fill from the average, as specified for in service inspection in item (ii) of sub-paragraph (2) of this paragraph. This limit will apply for initial verification and **for in-service inspection** testing.

(4) Maximum permissible error for influence factor tests:

The maximum permissible error for any static test load during influence factor tests shall be 0.25 of the maximum permissible deviation (as specified in item (ii) of sub-paragraph (2) of this paragraph for **in-service inspection**, corresponding to the value of a fill equal to that load.

Note: For instruments where the fill may not be equal to one load, the maximum permissible error applicable for a test on one static load shall be calculated in accordance with the test procedures.

(5) Influence factors: Refer to Annex A for test conditions.

(i) *Static temperatures:*

Instruments shall comply with the appropriate metrological and technical requirements at temperatures from -10°C to +40°C. However, for special applications the limits of the temperature range may differ from those given above but such a range shall not be less than 30°C and shall be specified in the descriptive markings.

(ii) *Power supply (AC):*

Instruments which are powered by an AC electricity supply shall comply with the appropriate metrological and technical requirements when operated at voltages from - 15% to +10% of the reference voltage.

(iii) *Tilting:*

Instruments which are not intended for installation in a fixed position and which do not have a level indictor shall comply with the appropriate metrological and technical requirements when tilted by 5%.

Where a level indictor is present it shall enable the instrument to be set to a tilt of 1% or less.

(6) Units of measurement:

The units of mass to be used on an instrument are the milligram (mg), the gram (g), the kilogram (kg) and the tonne (t).

3. Technical requirements

(1) Suitability for use

A filling instrument shall be designed to suit the method of operation and the products for which it is intended. It shall be of adequately robust construction so that it maintains its metrological characteristics.

(2) Security of operation

(I) *Accidental mal-adjustment:*

An instrument shall be so constructed that an accidental breakdown or a mal-adjustment of control elements likely to disturb its correct functioning cannot take place without its effect being evident.

(ii) *Use of a printer:*

Any print-out is for information purposes only and not for use in a commercial transaction, except for preset values and number of weighings.

(iii) *Ancillary devices:*

Any ancillary device provided for use with a filling instrument shall not affect the correct functioning of the instrument.

(iv) *Scale interval (d):*

Scale intervals of all indicating devices associated with a weighing unit shall be the same.

(3) Fill setting device

If fill setting is by means of a scale, it shall be graduated in units of mass.

If fill setting is by means of weights, they shall be either weights in accordance with these rules or purpose-designed of any nominal value, distinguishable by shape and identified with the filling instrument.

(4) Final feed cut-off device

The final feed cut-off device shall be clearly differentiated from any other device.

The direction of movement corresponding to the sense of the desired result shall be shown, where applicable.

(5) Feeding device:

The feeding device shall be designed to provide sufficient and regular flow rate(s).

An adjustable feeding device shall be fitted with an indication of the direction of movement corresponding to the sense of the adjustment of the feed where applicable.

(6) Load receptor

(i) The load receptor, and feed and discharge devices as appropriate, shall be designed to ensure that residual material retained after each discharge is negligible.

(ii) Instruments using the subtractive weighing principle shall be designed to ensure that residual material retained at feed from the discharge gate is negligible.

(iii) The load receptor shall provide access and facilities so that where necessary test weights or masses up to the maximum capacity can be placed in position, in a safe and secure manner. If these facilities are not a permanent fixture of the instrument, they should be kept in the vicinity for the instrument.

(iv) Manual discharge of the load receptor shall not be possible during automatic operation.

(7) Zero setting and tare devices

(i) The filling instrument shall be provided with a zero-setting device, which may also be used for the setting of tare. The device may be—

(a) Manual;

(b) Semi-automatic, or

(c) Automatic

(ii) Zero-setting and tare devices shall be capable of setting to less than or equal to 0.25 of the maximum permissible deviation for in-service inspection for a fill equal to the minimum capacity for instruments with one weighing unit, and for a fill equal to the rated minimum fill for selective combination weigher.

(iii) Non-automatic or semi-automatic zero-setting and tare device should be locked during automatic operations.

(iv) The weighing unit shall be in stable equilibrium when the zero setting and tare device is being set.

(8) Equilibrium mechanism

The equilibrium mechanism may be provided with detachable masses which shall be either weights in accordance with OIML requirements or purpose-designed masses of any nominal value, distinguishable by shape and identified with the filling instruments.

(9) Security

A security means shall be provided for components and pre-set controls to which access is prohibited.

(10) Descriptive markings

Filling instruments shall bear the following markings

(I) *Marking shown in full*

(a) Name or identification mark of the manufacturer

(b) Name or identification mark of the importer (if applicable)

(c) Serial number and type designation of the instrument

(d) Product(s) designation (i.e. materials that may be weighed)

(e) Temperature range (if applicable, see 2.5.1) in the form .....C/....C

(f) Electrical supply voltage in the form.....V

(g) Electrical supply frequency in the form...Hz

(h) Working fluid pressure (if applicable) in the form.....kPa

(i) Average number of loads/fill (if applicable)

(j) Maximum fill (if applicable)

(k) Minimum fill (if applicable)

(l) Rated minimum fill

(m) Maximum rate of operation (if applicable) in the form ..... Load per minute

(II) *Marking shown in code*

(a) Pattern approval sign

(b) Indication of the accuracy class X(x)

(c) Reference value for accuracy class Ref (x)

(d) Scale interval (if applicable) in the form d = ...

(e) Maximum capacity (or minimum discharge where applicable) in the form Max=.....

(f) Maximum additive tare in the form T = + ...

(g) Maximum subtractive tare in the form T = -.....

An instrument may be verified for different materials for which different classes shall apply or which require different operating parameters to maintain limits of error. Marking shall be such that the alternative class or operating parameters are clearly associated with the appropriate material designation.

In the case of subtractive weigher the minimum load to be discharged shall be specified.

(iii) *Presentation of descriptive markings:*

The descriptive marking shall be indelible and of a size, shape and clarity to enable legibility under normal conditions of use of the filling instrument. They shall be grouped together in a clearly visible place on the filling instrument, either on a date plate fixed to the instrument or on the filling instrument itself.

Where the markings are placed on a date plate, it shall be possible to seal the plate bearing the markings. Where they are marked on the filling instrument itself it shall not be possible to remove them without destroying them.

The descriptive markings may be shown on a programmable display, which is controlled by software. In this case, means shall be provided for any access to reprogramming of the markings to be automatically and non-erasable, recorded, e.g. by traceable access software when a programmable display is used, the plate on the instrument shall bear at least the following markings:

(a) Type and designation of the instrument;

(b) Name or identification mark of the manufacturer;

(c) Pattern approval number;

(d) Electrical supply voltage;

(e) Electrical supply frequency; and

(f) Pneumatic pressure

(11) Verification marks

(i) *Position:*

The filling instruments shall have a place for the application of verification marks. This place shall:

(a) be such that the part of which it is located cannot be removed from the filling instrument without damaging the marks

(b) allow easy application of the mark without changing the metrological qualities of the filling instruments

(c) be visible without the filling instrument having to be moved when it is in service.

(ii) *Mounting:*

Filling instruments required to bear verification marks shall have a verification mark support, at the place provided for above, which shall ensure the conservation of the marks.

When the mark is made with a stamp, this support may consists of a strip of lead or any together material with similar qualities, inserted into a plate fixed to the filling instrument or a cavity bored in the filling instrument itself.

When the marks consist of an adhesive transfer, a space shall be prepared for this purpose.

(12) Control instrument:

The control instrument may be separate from an integral part of the filling instrument.

4. Requirements for electronic instruments

Electronic filling instruments shall comply with the following requirements, in addition to the applicable requirements of all other clauses of this specification.

(1) General requirements

(i) *Rated operating conditions:*

Electronic operating conditions

Electronic instrument shall be so designed and manufactured that they do not exceed the maximum permissible errors under rated operating conditions.

(ii) *Influence factors:*

An electronic instruments shall comply with the requirements of sub-paragraph (5) of paragraph 2 and shall also comply with appropriate metrological and technical requirements at a relative humidity of 85% at the upper limit of the temperature range of the instrument.

(iii) *Disturbances:*

Electronic instruments shall be so designed and manufactured that when exposed to disturbances, either:—

(a) significant faults do not occur, i.e. the difference between the weight indication due to the disturbance and

the indication without the disturbance (intrinsic error) shall not exceed the value specified in paragraph 4(2)(v) of Part I; or

(b) significant faults are detected and acted upon.

Note: A fault equal to or less than the value in paragraph 4(2)(v) of Part I is allowed irrespective of the value of the error of indication.

(iv) *Evaluation for compliance:*

The pattern of an electronic instrument is presumed to comply with the requirements of paragraphs 4(1)(i), 4(1)(ii) and 4(1)(iii), if it passes the examination and tests specified in Annex A.

(v) *Application:*

The requirements in paragraph 4(1) (iii) may be applied separately—

(a) either to each individual cause of significant fault; or

(b) to each part of the electronic instrument; or

(c) to both.

The choice of whether sub-item (a) or sub item (b) above should be applied is left to the manufacturer.

(2) Functional requirements

(i) *Indicator display tests:*

If the failure of an indicator display element can cause a false weight indication, then the instrument shall have a display test facility which is automatically initiated at switch-on of indication, e.g. indication of all the relevant signs of the indicator in the active and non-active states for a sufficient time to be easily observed by the operator.

(ii) *Acting upon a significant fault:*

When a significant fault has been detected, the instrument shall either be automatically made inoperative or a visual or audible indication shall be provided automatically and shall continue until such time as the user takes action or the fault disappears.

(iii) *Warm-up time:*

During the warm-up time of an electronic instrument there shall be no indication or transmission of the result of weighing, and automatic operation shall be inhibited.

(iv) *Interface:*

An instrument may be equipped with an interface within allows it to be coupled to external equipment. When an interface is used, the instrument shall continue to function correctly and its metrological functions shall not be influenced.

(v) *Battery power supply:*

An instrument that operates from a battery power supply shall, whenever the voltage drops below the manufacturer's specified minimum value, either continue to function correctly or automatically be put out of service.

(3) Examination and tests:

The examination and testing of an electronic instrument is intended to verify compliance with the applicable requirements of this specification and especially with the requirements of this paragraph.

(i) *Examinations*

An electronic instrument shall be examined to obtain a general appraisal of the design and construction.

(ii) *Performance tests:*

An electronic instrument or electronic device, as appropriate, shall be tested as specified in Annex A to determine the correct functioning of the instrument.

Tests are to be carried out on the whole instrument except when either the size or the configuration or both of the instrument does not lend itself to testing as a unit. In such cases the electronic devices shall be tested, where possible as a simulated instrument including all electronic elements of a system which can affect the weighing result. In addition, an examination shall be carried out on the fully operational instrument.

Susceptibility that would result from the use of electronic interfaces to other equipment shall be simulated in the tests.

(iii) *Span stability:*

When an electronic instrument is subjected to the span stability test specified in paragraph 7 of Annexure A, the absolute value of the difference between the errors obtained for any two measurements shall not exceed half the maximum permissible error for influence factor tests for a near maximum capacity load.

5. Metrological controls

(1) General

(i) *Provision of means of testing:*

For the purposes of testing, the metrological authority may require from the applicant the product (i.e. the material to be weighed), the handling equipment, the appropriately qualified personnel and a control instrument.

(ii) *Material tests:*

(a) For pattern evaluation—The material used as the test load for pattern evaluation shall be representative of a product for which the instrument is designed. The test shall be conducted in accordance with the test procedure in paragraph 8(1) of Annexure A.

(b) For initial verification and in-service verification—The in-situ material tests shall be done in accordance with the descriptive marking under the normal conditions of which the instrument is intended. The test shall be conducted in accordance with the test procedure laid down in paragraph 8(2) of Annexure A.

(2) Pattern approval

(i) *Documentation:*

The application for pattern approval shall include documentation comprising:

(a) metrological characteristics of the instrument,

(b) a set of specifications for the instrument,

(c) a functional description of the components and services,

(d) drawings, diagrams and general soft ware information (if applicable), explaining the construction and operation, including interlocks,

(e) any document or other evidence that the design and construction of the instrument complies with the requirements of this specification.

(ii) *General requirements:*

The pattern evaluation shall be carried out on one or more (and normally not more than three) units that represent the definitive pattern. One or more of the units shall be complete and fully operational of the purposed of paragraph 5(2)(iii)(a). One or more of the units shall be submitted in a form suitable for simulation testing in a laboratory and shall include the whole of the electronics which affect the weighing result except in the case of an associative weigher where only one representative weighing unit may be included.

The instrument or simulated instrument shall have a load indicator, or an interface allowing access to a quantity that can be calibrated to provide an indication of load, so that the requirements of paragraph 2(2)(i) (maximum permissible errors for static tests) may be tested and so that the instrument may be tested for influence quantities. The scale interval of the load indicator shall not exceed 0.125 of the maximum permissible deviation for in-service verification for a fill equal to the minimum capacity.

The evaluation shall consist of the tests specified in paragraphs 5(1)(ii)(a) and 5(2)(iii).

(iii) *Pattern evaluation:*

The submitted documents shall be examined and tests carried out to verify that the instrument complies with:

(a) the requirements specified for static tests in paragraph 2,

(b) the technical requirements in paragraph 3,

(c) the requirements in paragraph 4 for electronic instruments, where applicable.

The appropriate metrological authority shall conduct the test in a manner, which prevents an unnecessary commitment of resources.

Note: The appropriate metrological authority may accept with the consent of the applicant, equivalent test data obtained from other metrological authorities.

(a) Tests for compliance with technical requirements

Operational test with material shall be done in accordance with the procedure in paragraph 8(1) of Annex A on a complete instrument to assess compliance with the technical requirements of paragraph 3.

(b) Influence factor tests

Influence factors shall be applied during simulation tests in a manner that will reveal a corruption of the weighing results of any weighing process to which the instrument should applied, in accordance with—

(a) Paragraph 2(5) for all instruments; and

(b) Paragraph 4 for electronic instruments

(c) Apportioning of errors

Where parts of an instrument are examined separately in the process of pattern approval, the following requirements shall apply—

The error limits applicable in a part which is examined separately are equal to a fraction P_i of the maximum permissible errors or the allowed variations of the indication of the complete instruments. The fractions for any part have to be taken for the same accuracy class as for the complete instrument incorporating the part.

The fractions Pi shall satisfy the following equation:

$$(P_1^2 + P_2^2 + P_3^2 + \ldots) \leq 1$$

The fraction Pi, shall be chosen by the manufacturer of the part and shall be verified by an appropriate test. However, the fraction shall not exceed 0.8 and shall not be less than 0.3 when more than one part contributes to the effect in question.

Note: As the requirements of this sub-paragraph only apply to the instrument submitted for pattern evaluation and not to those subsequently submitted for verification, the means by which it will be possible to determine whether the appropriated maximum permissible error or maximum allowable variation has been exceeded while decided mutually between the metrological authority and the applicant. The means may be for example:

(a) the provision or adoption of the indicating device to give the required resolution,

(b) the use of change point weights, or

(c) any other means mutually agreed.

(iv) *Place to testing:*

Instruments submitted for pattern approval may be tested either—

(a) on the premises of the metrological authority to which the application has been submitted; or

(b) In any other suitable place agreed to between the metrological authority concerned and the applicant.

(v) *Certificate of approval and determination of paragraph [2(2)(i) and paragraph 5 of Annex A]:*

The pattern approval certificate shall state the reference value for the accuracy class as determined by the static tests in paragraph 5 of Annex A and shall state that the actual class (equal to the greater than the reference value) shall be determined by compliance with the metrological requirements at initial verification.

(3) Initial verification

(i) *General requirements:*

Instruments shall be examined for conformity with the approved pattern where applicable and shall be tested for compliance with paragraph 2 [excluding paragraph 2(2)(i) and paragraph 2(5)] for the intended products and corresponding accuracy classes under normal conditions of use.

Tests shall be carried out by the appropriate metrological authority, in-situ, with the instrument fully assembled and fixed in the position in which it is intended to be used. The installation of an instrument shall be so designed that an automatic weighing operation will be the same whether for the purposes of testing or for use for a transaction.

(ii) *Material tests:*

Material test shall be carried out in compliance with paragraph 5(1)(ii) using the test methods specified in paragraph 6.

(iii) *Conduct of the test:*

The appropriate metrological authority:

(a) shall conduct the test in a manner which prevents an unnecessary commitment of resources,

(b) may, where appropriate and to avoid duplicating tests previously done on the instrument for pattern evaluation under paragraph 5(2)(iii) (a) use the results of observed tests to assess for initial verification.

(iv) *Determination of accuracy class:*

The appropriate metrological authority shall :—

(a) determine the accuracy class for the materials used in the tests in accordance with paragraph 5(2)(v) by reference to the material test results and the limits of error specified in paragraph 2(2)(ii) and paragraph 2(3) for initial verification,

(b) Verify that accuracy classes determined as above.

(4) In-service verification

In-service verification shall be as specified in para 5(3)(i) and para 5(3)(ii). The maximum permissible errors shall be as specified in para 2(2)(ii) for in-service verification.

The appropriate metrological authority shall conduct the test in a manner, which prevents an unnecessary commitment of resources.

Quite often a question is asked as to how to calculate R(x). The method is as follows:

Ref. (x) or simply x, is a numeral indicating the class of the gravimetric filling machine, which is to be assigned at the time of model approval. Once the value of x or Ref. (x) is assigned, one can determine its MPD by multiplying the figures given in Table I of this part of this book. At the time of verification, one has to see only for the compliance to the MPD and other requirements.

For calculating x or Ref. (x), one should calculate (1) value of setting error se and (2) maximum deviation md as explained in this part on. Remember $mpse_{(1)}$ is 1/4 of mpd_1 given in table of 5(3)(i) and last column of the observation sheet gives deviation from the mean fill, so maximum deviation md is calculated from here. Number of fills to be taken is chosen with the help of Table 2.

Then examine the values of se/mpse1 and $md/mpd_{(1)}$, these may be a whole number (including zero) plus a fraction like 2 + 0.325 and 2 + 0.545 then class of the instrument is one plus the whole number irrespective of the value of fraction, i.e. 3 in the given example. In case whole number is zero then Ref. (x) or x is 1.

If the values of se/mpse 1 and md/mpd_1 are 3.575 and 3.265 then Ref. (x) or x will be 5 and not 4, as x has to be either of 1, 2, 5 or multiples of 10 of 1, 2 and 5.

6. Test methods

(1) Determination of the mass of individual fills

The mass of the individual fills is determined using one of the methods specified in paragraph 6(5)(i) or in paragraph 6(5)(ii).

(2) Conduct of material tests

(a) The tests shall be carried out on fills using loads at or near to, the maximum capacity and also at, or near to, the minimum capacity. Material tests should only be carried out with the products the instrument is intended to be used for.

(b) Cumulative weighers shall be tested as above with the maximum practical number of load per fill and also with the minimum number of loads per fill, and associative weighers as above with the average (or optimum) number of loads per fill.

(c) If the minimum capacity is less than one third of the maximum capacity then tests shall also be carried out near the centre of the load weighing range preferably at a value close to, but not above, 100g, 300g, 1000g or 15000g as appropriate.

(d) All tests shall be conducted with any adjustable parameter critical to metrological integrity e.g. final feed time or rate, set to the most onerous condition allowed by the manufacturer's printed instructions and incorporated in the descriptive markings.

(i) *Testing the effect of a correction device*

(a) Any correction device e.g. in-flight correction or automatic zero setting fitted to an instrument shall be operated during the tests according to the manufacturer's printed instructions.

(b) If the correction device is not activated during each filling operation, then tests at minimum capacity shall be arranged to include the effect of one or more regular operations of the correction device, e.g. buy including in the test at least three fills immediately before and after the activation of the device.

(c) The initial fills after the charge between maximum capacity and minimum capacity shall be included in the test unless the instrument bears a clear warning to discard the stated number of fills after a change to the instrument settings.

(3) Number of fills

The number of individual tests fill depends upon the preset value (m) as specified in Table 2 below:—

TABLE 2

m ≤ 10kg	60 fills
10kg ≤ m ≤ 25kg	32 fills
25kg ≤ m ≤ 100kg	20 fills
100kg ≤ m	10 fills

(4) Accuracy of standards

The control instrument and standard weights used in testing shall ensure that checking of the test fills to an error not greater than either—

(a) one-third of the maximum permissible deviation and maximum permissible preset value error (as appropriate) for automatic weighing [paragraph 2(2) and paragraph 2(3) respectively] if the control instrument or the device used for control purposes is verified immediately prior to the material test; or

(b) one-fifth of the maximum permissible deviation and maximum permissible preset value error (as appropriate) for automatic weighing [paragraph 2(2) and paragraph 2(3) respectively] in all other cases.

(5) Material test methods

(i) *Separate verification method:*

The separate verification method requires the use of a (separate) control instrument to find the conventional true value of the mass of the test fill.

(ii) *Integral verification method:*

With this method the instrument being tested is used to determine the conventional true value of the mass of the test fill. The integral verification method shall be conducted using either:—

(a) an appropriately designed indicating device, or

(b) an indicating device with standard weights to assess the rounding error.

The total uncertainty of the test method (separate or integral verification) shall be not greater than one-third of the maximum permissible error for the instrument.

Notes: (1) The integral verification method depends on determining the masses of the loads. Limits of error as specified in paragraph 2(2) are for the mass of the fill. If it is not possible to ensure that in normal operation, all load is discharged at each cycle of operation, i.e. that the sum of the loads is equal to the fill, then the separate verification method [paragraph 6(5)(i)] should be used.

(2) When using the integral verification method for a cumulative weighing instrument a sub-division of the test fill is unavoidable. When calculating the conventional true value of the mass of the test fill, it is necessary to consider the increased uncertainty due to the division of the test fill.

(a) Interruption of automatic operation

An automatic filling operation of a test fill be initiated as for normal operation. However, the automatic operation shall be interrupted twice during each filling cycle i.e. after the load is assembled and after the load is discharged.

An automatic operation shall not be interrupted during consecutive weighing cycles if the speed of operation is so high that the interruption would significantly affect the mass of the fill.

(i) Pre-discharge (full) interrupt

The automatic operation shall be interrupted after the load receptor(s) has (have) been loaded and the feed of material has ceased. When the load receptor(s) has (have) stabilized, the net weight of the fill indicated or determined by balancing with standard weights shall be recorded and the instrument switched back to automatic operation.

(ii) Post-discharge (empty) interrupt

The automatic operation shall be interrupted after the load(s) has (have) been discharged and the load receptor(s) is (are) ready to receive a further load. When the load receptor(s) has (have) stabilized, the empty load receptor weight indicated or determined by balancing with standard weights shall be recorded and the instrument switched back to automatic operation.

(6) Preset value

The indicated preset value of the fill shall be noted where applicable.

(7) Mass and average value of the test fill

The test fill shall be weighed on a control instrument and the result shall be considered as being the conventional true value of the test fill. The average value of all the fills in the test shall be calculated and noted.

(8) Deviation for automatic weighing

The deviation for automatic weighing used to determine compliance of each fill with the maximum

permissible deviation for automatic weighing paragraph 2(2) shall be the difference between the conventional true value of the mass of the test fill [as defined in paragraph 6(7)] and the average value of all the fills in the test.

(9) Preset value error for automatic weighing

The preset value error for automatic weighing used to determine compliance with paragraph 2(3) shall be the difference between the average value of the conditional true value of the mass of the test fill (as defined in paragraph 6(7) and the preset value for the fills.

ANNEXURE A

TESTING PROCEDURES FOR AUTOMATIC GRAVIMETRIC FILLING

(Mandatory)

[See paragraph 2(5)]

Meaning of symbols

I = Indication

In = n^{th} Indication

L = Load

ΔL = Additional load to next changeover point

P = I + 1/2 d - Δ L + Indication prior to rounding (digital indication)

E = P - L = Error

mpd = Maximum permissible deviation of each fill from the average

EUT = Equipment under test

se = Setting error

mpse = Maximum permissible setting error

md = Maximum deviation of each fill from the average

1. Examination for pattern approval

(1) Administrative examination [paragraph 5(2)]

Review the documentation that is submitted to determine if it is adequate and correct. For pattern approval the documentation shall include:—

1(1)(a) metrological characteristics of the instrument,

1(1)(b) a set of specifications for the instrument,

1(1)(c) a functional description of the components and devices, and

1(1)(d) drawings, diagrams and general software information (if applicable), explaining the construction and operation, including interlocks.

Consider any document or other evidence that the design and construction of the instrument complies with the requirements of this specification.

(2) Compare construction with documentation [paragraphs 4(3) and 5(2)]

Examine the various devices of the instrument to ensure conformity with the documentation.

(3) Technical requirements (Paragraph 3)

Examine the instrument for conformity with technical requirements according to the checklist given in the test report format.

(4) Functional requirements [Paragraphs 4(2) and 4(3)]

Examine the instrument for conformity with functional requirements according to the checklist given in the test report format.

2. Examination for initial verification

(1) Compare construction with documentation [paragraph 5(3)(i)]

Examine the instrument for conformity with the approved pattern.

(2) Descriptive markings [paragraph 3(10)]:

Check the descriptive markings according to the checklist given in the test report format.

3. General test requirements

(1) Power supply

Power up the equipment under test (EUT) for a time period equal to or greater than the warm-up time specified by the manufacturer and maintain the EUT energized for the duration of each test.

(2) Zero-setting

Using the manual or semi-automatic zero-setting facility, adjust the EUT as closely as practicable to zero prior to each test, and do not readjust it at any time during the test, except to reset if a significant fault has been indicated.

Status of automatic zero facilities shall be as specified for each test.

(3) Temperature

The tests shall be performed at a steady ambient temperature, usually normal ambient temperature unless otherwise specified. The temperature is deemed to be steady when the difference between the extreme temperatures noted during the test does not exceed one-fifth of the temperature range of the instrument without being greater than 5°C, and the rate of change does not exceed 5°C per hour.

474 GI/11-117

The handling of the instrument shall be such that no condensation of water occurs on the instrument.

(4) Control instruments

(i) *Accuracy of test system [paragraph 6(4)]*

The control instrument and standard weights used in testing shall ensure the determination of the weight of test loads and fills to an error not greater than either:

(a) one-third of the maximum permissible error of the instrument i.e., in the case of material tests, one-third of the maximum permissible deviation and maximum permissible preset value error (as appropriate) for automatic weighing, if the control instrument or the device used for control purposes is verified immediately prior to the material test; or

(b) one-fifth of the maximum permissible error of the instrument i.e., in the case of material tests, one-fifth of the maximum permissible deviation and maximum permissible preset value error (as appropriate) for automatic weighing, in all other cases.

Note: Accuracy requirements for the test system depend on the limits of error which depend on the accuracy class. However, the class is determined from the results of the tests. It is, therefore, necessary that the metrological authority responsible for testing should be informed of the best accuracy class that may be achieved, prior to commencement of testing.

(ii) *Use of standard weights to assess rounding error*

(a) General method to assess error prior to rounding:

For instruments with digital indication having a scale interval d, changeover points may be used to interpolate between scale intervals, i.e. to determine the indication of the instrument, prior to rounding, as follows:—

At a certain load, L, the indicated value, I, is noted. Additional weights of say 0.1 d are successively added until the indication of the instrument is increased unambiguously by one scale interval (I +d). The additional load ΔL added to the load receptor gives the indication, P, prior to rounding by using the following formula:—

$$P = I + 0.5\,d - \Delta L$$

The error prior to rounding is:

$$E = P - L = I + 0.5\,d - \Delta L - L$$

Example: An instrument with a scale interval, d, of 5g is loaded 1kg and thereby indicates 1000g. After adding successive weights of 0.5g, the indication changes from 1000g to 1005g at an additional load of 1.5g. Inserted in the above formula these observations give:

$$P = (1000 + 2.5 - 1.5)\,g = 1001g$$

Thus the true indication prior to rounding is 1001 g, and the error prior to rounding is:

$$E = (1001 - 1000)\,g = +1\,g$$

(b) Correction for error at zero

Evaluate the error at zero load, (E 0) by the method specified in paragraph 3(4)(ii)(a) of this Annex.

Evaluate the error at load L, (E) by the method specified in paragraph 3(4)(ii)(a) of this Annex.

The corrected error prior to rounding, (Ec) is:

$$Ec = E - Eo$$

Example: if, for the example in paragraph 3(4)(ii)(a), the error calculated at zero load was:

$$Eo = +0.5\,g$$

The corrected error is:

$$Ec = +1 - (+0.5) = +0.5g$$

4. Test program

(1) Pattern evaluation [paragraph 5(2)(iii)]

(i) Paragraphs 1, 5, 6, 7 and 8(1) of this Annex shall normally be applied for pattern evaluation.

(ii) For instruments in which the weighing function is provided by a non-automatic weighing instrument that has been approved of its model, the tests specified in paragraph 4(1)(i) may be omitted.

(2) Initial verification [Paragraph 5(3)]

Paragraph 2 and paragraph 8(2) of this Annex shall be applied for initial verification tests.

Static weighing test method (paragraph 5(4) of this Annex) may also be used if necessary to verify the indicator for the integral verification method of material tests.

5. Static tests (pattern approval stage)

(1) General Paragraph 5(2)(ii)

Electronic instruments or instrument simulators are required to have a load indicator, or an interface

allowing access to quantity that can be calibrated to provide an indication of load so that the effect of influence quantities may be tested and the reference accuracy class determined. This facility also enables testing of warm-up time and zero-and tare-setting where applicable. This static weighing tests are normally done as part of influence quantity testing.

Limits for warm-up time tests and for accuracy of zero-and tare-setting are derived from Paragraph 2(2), and are therefore dependent on the reference accuracy class. Therefore the results of these tests must be evaluated after the reference accuracy class has been determined.

(2) Warm-up time [Paragraph 4(2)(iii)]

This rest is to verify that in the period immediately after switch-on, operation is inhibited until the warm-up time is finished, i.e. until the metrological performance can be maintained. The method is to check that automatic operation is inhibited until a stable indication is obtained and to verify that zero and span errors comply with the specified requirements during the first 30 minutes of operation. If the zero is set as part of the normal automatic weighing cycle then this function shall be enabled or simulated as part of the test.

Other test methods which verify that metrological performance is maintained during the first 30 minutes of operation may be used:

(i) Disconnect the instrument from the power supply for a period of at least 8 hours prior to the test.

(ii) Reconnect the instrument and switch on while observing the load indicator.

(iii) Check that it is not possible to initiate automatic weighing until the indicator has stabilized.

(iv) As soon as the indication has stabilized, set the instrument to zero if this is not done automatically.

(v) Determine the error at zero by the method of para 3(4)(ii)(a) of Annexure A.

(vi) Apply a static load close to Max. Determine the error by the method of paragraphs 3(4)(ii)(a) and 3(4)(ii)(b) of this Annex.

(vii) Repeat steps (v) and (vi) after 5, 15 and 30 minutes.

(viii) From (v) verify that the zero-setting error is not greater than the limit specified in paragraph 3(7).

(ix) From steps (vi) and (vii) verify that:

(a) the error (corrected for zero error) for a static load close to Max is not greater than the limit specified in paragraph 2(4).

(b) after each time interval the error at zero is not greater than twice the limit specified in paragraph 3(7).

Note: Zero-setting accuracy is specified as 0.25 mpd so the additional allowance of 0.25 mpd is added for variation of zero after the initial zero-setting. This is consistent with paragraph 2(4) (mpe for a static test load) and paragraph 6(2)(ii) of this Annex (temperature effect on no load indication).

(3) Zero- and tare-setting paragraph 3(7)

(i) *General*

Unless it is clear that zero and tare functions are performed by the same process then both function shall be tested separately.

Zero-and tare-setting may be by more than one mode, for example:

(a) non-automatic or semi-automatic,

(b) automatic at switch-on,

(c) automatic at start of automatic operation,

(d) automatic as part of weighing cycle.

It is normally only necessary to test the accuracy of zero-and tare-setting in one mode if it is clear that the same process is used for each mode. If zero or tare is set as part of the automatic weighing cycle then this mode shall be tested. To test automatic zero-or tare-setting it is necessary to allow the instrument to operate through the appropriate part of the automatic cycle and then to halt the instrument before testing.

(ii) *Accuracy of zero-setting [paragraph 3(7)]:*

(1) Set the instrument to zero in a mode as determined by paragraph 5(3)(i) of this Annex.

(2) Add weights to the load receptor to determine the additional load at which the indication changes from zero to one scale interval above zero.

(3) Calculate the error at zero according to the description in paragraph 3(4)(ii)(a) of this Annex.

(iii) *Accuracy of tare-setting [paragraph 3(7)]:*

Accuracy of tare shall be tested at the maximum tare as specified by the manufacturer.

(1) Place the tare load on the load receptor and allow the tare function to operate in a mode as determined by paragraph

5(3)(i) of this Annex and in accordance with the manufacturer's instructions.

(2) Add weights to the load receptor to determine the additional load at which the indication changes from zero to one scale interval above zero.

(3) Calculate the error according to the description in paragraph 3(4)(ii)(a) of this Annex.

(4) Static weighing test method [paragraph 5(2)(iii)]

Apply test loads from zero up to and including Max, and similarly remove the test loads back to zero. The test loads selected shall include values close to Max and Min and other critical loads as specified in paragraph 6(2)(a), subject to requirements of this Annex.

Determine the error at each test load, using the procedure of paragraph 3(4)(ii) of this Annex, if necessary, to obtain the accuracy requirements of paragraph 3(4)(i) of this Annex.

It should be noted that when loading or unloading weights, the load shall be progressively increased or progressively decreased.

(5) Determination of reference accuracy class [paragraph 5(2)(v)]

The static weighing tests during application of influence factors (as appropriate) shall be used at pattern approval stage to establish the reference value for accuracy class, i.e. Ref(x), as follows :—

(i) Perform static weighing tests for influence factors and loads as specified in this Annex.

(ii) For each load determine the maximum permissible error for influence factor tests for class X(1), $mpe_{(1)}$

(Refer to para 2(4) and to this Annex where appropriate).

(iii) Calculate [Error/$mpe_{(1)}$] for each load.

(iv) From (iii) determine the maximum value of [Error/$mpe_{(1)}$] for all the influence factor tests, [Error/$mpe_{(1)\,max}$]

(v) Determine Ref (x) from [Error/$mpe_{(1)\,max}$] such that :

Ref (x)> [Error/$mpe_{(1)}$] max and

Ref (x) = 1×10^k , 2×10^k , or 5×10^k,

the index k being a positive or negative whole number or zero. Values for significant fault shall then be calculated from the mpd for the reference class.

6. Influence factor and disturbance tests

(1) Test conditions

(i) *General requirements :*

Influence factor and disturbance tests are intended to verify that electronic instruments can perform and function as intended in the environment and under the conditions specified. Each test indicates, where appropriate, the reference condition under which the intrinsic error is determined.

It is generally not possible to apply the influence factors or disturbances to an instrument which is processing material automatically. The instrument shall therefore be subjected to the influence factors or disturbances under static conditions or simulated operation as defined herein. The permissible effects of the influence factors or disturbances, under these conditions, are specified for each case. When the effect of one influence factor is being evaluated, all other factors are to be held relatively constant, at a value close to normal. After each test the instrument shall be allowed to recover sufficiently before the following test—

Where parts of the instrument are examined separately, errors shall be apportioned in accordance with paragraph 5(2)(iii)(c).

The operational status of the instrument or simulator shall be recorded for each test. When the instrument is connected in other than a normal configuration, the procedure shall be mutually agreed on by the approving authority and the applicant.

(ii) *Simulator requirements*

(a) General

The simulator for influence factor and disturbance tests should include all electronic elements of the weighing system.

(b) Load cell

The simulator should also include the load cell and a means to apply standard test loads. Where this is not possible, e.g. for high capacity instruments, then a load cell simulator may be used or alternatively the load cell interface

may be modified to incorporate a scaling factor to give the design output for a small test load. Repeatability and stability of a load cell simulator should make it possible to determine the performance of the instrument with at least the same accuracy as when the instrument is tested with weights.

(c) Interfaces

Susceptibility that would result from the use of electronic interfaces to other equipment shall be simulated in the tests. For this purpose it is sufficient to connect 3 m of interface cable terminated to simulate the interface impedance of the other equipment.

(d) Documentation

Simulators shall be defined in terms of hardware and functionality by reference to the instrument under test, and by any other documentation necessary to ensure reproducible test conditions. This information shall be attached to, or be traceable from the test report.

(iii) Test limits for multi-load instruments :

For instruments where the fill may consist of more than one load, the value of a significant fault and the limit of error for influence factor tests must be determined by the metrological authority after considering the design of the instrument and the method of test, such that the effect on the fill is equivalent to the values specified in paragraph 4(2)(v) specified in Part I and paragraph 2(4) of Part II.

(a) Significant fault for multi-load instruments

The following examples show how to determine the value of a significant fault on selective combination weighers and cumulative weighers when testing.

(a-i) Significant fault for selective combination weighers

A fault greater than 0.25 of the maximum permissible deviation of each fill (as specified in Table 1) for in-service verification divided by the square root of the average (or optimum) number of loads in a fill, for a fill equal to the minimum capacity multiplied by the average (or optimum) number of loads in a fill.

Example : For a class X(1) instrument with Min = 200g designed for an average of 8 loads per fill, fill = 1600g, the maximum permissible deviation of each fill from the average fill (as specified in Table 1) for in-service verification is 1.5% = 24g. Hence the value of significant fault is :

$0.25 \times (24/\sqrt{8}) = 2.12g$

(a-ii) Significant fault for cumulative weighers :

A fault greater than 0.25 of the maximum permissible deviation of each fill (as specified in Table 1) for in-service verification, for a fill equal to the rated minimum fill, divided by the square root of the minimum number of loads per fill.

Example : For a class X (1) instrument with Max = 1200g and rated minimum fill of 8 kg : 8 kg/1.2 kg = 6.67; therefore the minimum number of loads per fill is 7.

The maximum permissible deviation (as specified in Table 1) for the minimum fill of 8 kg is 1.5% or 120g. Hence the value of significant fault is :

$0.25 \times (120/\sqrt{7}) = 11.34g$

Note : This definition of significant fault for cumulative weighers does not include Min. A cumulative weigher would normally be used at or near to Max.

(b) Limits of error for influence factor tests

The following examples show how to determine the limit of error for influence factor testing for selective combination weighers and cumulative weighers when testing.

(b-i) For selective combination weighers the maximum permissible error for

474 GI/11-118

any static test load during influence factor tests shall be 0.25 of the maximum permissible deviation for in-service verification for the appropriate mass of the fill divided by the square root of the average (or optimum) number of loads per fill.

Example : Class X(1) selective combination weigher, where the average number of loads per fill = 4. For a static test load = 100g the appropriate mass of the fill will be 400g for which the maximum permissible deviation for in-service verification is 3% i.e. 12g. Hence the maximum permissible error for influence factor tests is :

0.25 ' (12g/4) = 1.5g

(b-ii) For cumulative weighers the maximum permissible error for any static test load during influence factor tests shall be 0.25 of the maximum permissible deviation for in-service verification for the rated minimum fill divided by the square root of the minimum number of loads per fill.

Example : For a class X(1) instrument with Max = 1200g and rated minimum fill of 8 kg : 8 kg/1.2 kg = 6.67; therefore the minimum number of loads per fill = 7.

The maximum permissible deviation (as specified in Table 1) for the minimum fill of 8 kg is 1.5%, i.e. 120g. Hence the maximum permissible error for influence factor tests is :

0.25 ' (120/ √ 7) = 11.35g

Note : For cumulative weighers the average number of loads per fill is not known. Therefore it is not possible to define the limit of error for influence factors in terms of average loads per fill and appropriate mass of the fill. The above definition is based on maximum load and rated minimum fill.

(2) Influence factor tests

SUMMARY OF TESTS

Test	*Characteristic under test*	*Conditions applied*
Static temperatures	Influence factor	Mpe(*)
Temperature effect on no-load indication	Influence factor	Mpe(*)
Damp heat, steady state	Influence factor	Mpe(*)
Power voltage variation	Influence factor	Mpe(*)
Tilting	Influence factor	Mpe(*)

(*) mpe : maximum permissible error

(i) *Static temperatures (paragraph 2(5)(i)*

Static temperature tests are carried out according to Table 3 given below :

TABLE 3

Environmental Phenomena	*Test specification*
	Reference of 20°C
Temperature	Specified high for 2 hours
	Specified low for 2 hours
	5°C
	Reference of 20°C

Object of the test : to verify complaince with the provisions in paragraph 2(5)(i) under conditions of dry heat (non condensing) and cold. The test specified in 6(2)(ii) of this Annex may be conducted during this test.

Test procedures in brief

Precondition :	16 hours
Condition of the EUT :	Normal power supplied and "on" for a time period equal to or greater than the warm-up time specified by the manufacturer. Power is to be "on" for the duration of the test. The automatic zero-setting should be disabled.
Stabilization :	2 hours at each temperature under "free air" conditions.
Temperature :	As specified in paragraph 2(5)(i)
Temperature sequence :	Reference temperature of 20°C
	Specified high temperature
	Specified low temperature
	Temperature of 5°C
	Reference temperature of 20°C

Number of test cycles : At least one cycle.

Weighing test : After stabilization at the reference temperature and again at each specified temperature conduct the following :

Adjust the EUT as close to zero indication as practicable. It is important to ensure that the test result is unaffected by the automatic zero-setting function which should therefore be disabled. The EUT shall be tested with at least five different static test loads (or simulated loads) including Maximum and Minimum capacities. When loading or unloading weights the load must be respectively increased or decreased monotonically.

Record :
(a) date and time
(b) temperature
(c) relative humidity
(d) test load
(e) indications
(f) errors
(g) functional performance

Maximum allowable variations : All functions shall operate as designed. All errors shall be within the maximum permissible errors specified in paragraph 2(4).

(ii) *Temperature effect on no-load indication*

Note : This test should not be performed for instruments that have automatic zero-setting as part of the automatic weighing process.

The instrument is set to zero, the temperature is then changed to the prescribed highest and lowest temperatures as well as at 5°C. After stabilization, the error of the zero indication is determined. The change in zero indication per 5°C is calculated. The changes of these errors per 5°C are calculated for any two consecutive temperatures of this test.

This test may be performed during the temperature test [paragraph 6(2)(i) of this Annex].

Maximum permissible variations : The change in zero indication shall not vary by more than the maximum permissible error for influence factor tests for a load equal to the rated minimum fill, for a temperature difference of 5°C.

Condition of EUT : Normal power supplied and "on" for a time period equal to or greater than the warm-up time specified by the manufacturer. Power is to be "on" for the duration of the test.

(iii) *Damp heat, steady state [paragraph 4(3)(ii)]*

Damp heat, steady state test are carried out according to Table 4.

TABLE 4

Environmental phenomena	*Test specification*
Damp heat, steady state	Upper limit temperature and relative humidity of 85% for 2 days

Supplementary information :

Object of the test : To verify compliance with the provisions of paragraph 4(3)(i) under conditions of high humidity and constant temperature.

Precondition : None required.

Test load : One static test load close to minimum capacity.

Condition of the EUT : Normal power supplied and "on" for a time period equal to or greater than the warm-up time specified by the manufacturer. Power is to be "on" for the duration of the test.

The zero-setting and zero- tracking facilities shall be enabled as for normal operation. Adjust the EUT as close to zero indication as is practicable, prior to the test. The handling of the EUT shall be such that no condensation of water occurs on the EUT.

Stabilization :	Three hours at reference temperature and 50% humidity. Two days at the upper limit temperature as specified in paragraph 2(5)(i).
Temperature :	Reference temperature of 20°C and at the upper limit as specified in paragraph 2(5)(i).
Relative humidity::	50% at reference temperature. 85% at upper limit temperature.
Temperature humidity sequence :	The reference temperature of 20°C at 50% humidity. The upper limit temperature at 85% humidity. The reference temperature of 20°C at 50% humidity.
Number of test cycles :	At least one cycle.
Weighing test and test sequence :	After stabilization of the EUT at reference temperature and 50 % humidity apply the test load.
Record :	(a) date and time (b) temperature (c) relative humidity (d) test load (e) indications (f) errors

Increase the temperature in the chamber to the upper limit and increase the relative humidity to 85%. Maintain the EUT at no load for a period of 2 days. Following the 2 days, apply the static test load and record the data as indicated above. Allow full recover of the EUT before any other tests are performed.

Maximum allowable variations : All errors shall be within the maximum permissible errors specified in paragraph 2(4).

(iv) *Power voltage variation [paragraph 2(5)(ii)]*

Power voltage variation tests are carried out according to Table 5.

TABLE 5

Environmental phenomena	*Test specification*
	Reference voltage
Voltage variation	Reference voltage +10%
	Reference voltage - 15%
	Reference voltage

SUPPLEMENTARY INFORMATION :

Object of the test :	To verify compliance with the provisions of paragraph 2(5)(ii) under conditions of voltage variations.

Test procedures in brief

Precondition :	None required.
Condition of the EUT :	Normal power supplied and "on" for a time period equal to or greater than the warm-up time specified by the manufacturer. Adjust the EUT as close to zero indication as practicable, prior to the test. If it has an automatic zero-setting function then the instrument should be set to zero after applying each level of voltage.
Number of test cycles :	At least one cycle.
Weighing test :	The EUT shall be tested with a test load approximately equal to the minimum capacity. Zero-setting function shall be in operation.
Test sequence :	Stabilize the power supply at the reference voltage within the defined limits and apply the test load.
Record the following data :	(a) date and time (b) temperature (c) power supply voltage (d) test load (e) indications (as applicable) (f) errors (g) functional performance

Maximum allowable variations :	All functions shall operate as designed. All errors shall be within the maximum permissible errors specified in paragraph 2(4).

(v) *Tilting [paragraph 2(5)(iii)]*

Note : This test only applies to instruments that will not be permanently installed.

This test is not required for mobile instruments with a level indicator if it can be established that the tilt can be adjusted to 1% or less.

Test method :	Static tests whilst the EUT is tilted.
Object of the test :	To verify compliance with the provisions in paragraph 2(5)(iii) under conditions of tilt.
Test procedure in brief :	The test consists of tilting the EUT both forwards and backwards, longitudinally and from side to side (transversely), while observing the weight indications for a static test load.
Test severities :	Instruments without level indicators shall be tested at a tilt of 5%.
Maximum allowable variations :	All indications shall be within maximum permissible errors specified in paragraph 2(4).
Condition of EUT :	Normal power supplied and "on" for a time period equal to or greater than the warm-up time specified by the manufacturer. Power is to be "on" for the duration of the test. Adjust the EUT in its reference position (not tilted) as close to zero indication as practicable. If the instrument is provided with automatic zero-setting it shall not be in operation. The test shall be performed with a test load approximately equal to the maximum capacity.
Test sequence :	Record the zero indication. Apply the test load and record the indication. Remove the test load. Tilt the EUT longitudinally to the appropriate extent and record the zero indication. Apply the test load and record the indication. Remove the test load. Without further adjustment to any control affecting metrological performance tilt the EUT to the appropriate extent in the opposite direction and repeat the static weighing tests as above. Tilt the EUT in the transverse direction to the appropriate extent and repeat the tests. Tilt the EUT in the opposite direction and repeat the tests. In order to determine the influence of tilting on the loaded instrument, the indication obtained at each tilt shall be corrected for the deviation from zero which the instrument had prior to loading.

(3) Disturbance tests [paragraph 4(1)(iii)]

(I) *Short time power reduction*

Short time power reduction (voltage dips and

474 GI/11-119

short interruptions) tests are carried out according to Table 6.

TABLE 6

Environmental phenomena	*Test specification*
Voltage dips and short interruptions.	Interruption from reference voltage to zero voltage for one half cycle. Interruption from reference voltage to 50% of reference voltage for two half cycles. These mains voltage interruptions shall be repeated ten times with a time interval of at least 10 seconds

Supplementary information to the test procedures :

Object of the test : To verify compliance with the provisions in paragraph 4(1) (iii) under conditions of short mains voltage interruptions and reductions while observing the weight indication for a static load approximately equal to the minimum capacity.

Test procedures in brief :

Precondition : None required.

Condition of the EUT : Normal power supplied and "on" for a time period equal to or greater than the warm-up time specified by the manufacturer.

Adjust the EUT as close to zero indication as practicable, prior to the test. Zero-setting functions shall not be in operation. Not to be adjusted or readjusted at any time during the test except the reset if a significant fault has been indicated.

Number of test cycles : At least one cycle.

Weighing test and test variations : The EUT shall be tested with a test load approximately equal to the minimum capacity.

Stabilize all factors at nominal reference con-ditions. Apply the test load and record the following data :

(a) date and time

(b) temperature

(c) power supply voltage

(d) test load

(e) indications

(f) errors

(h) functional performance Interrupt the power supply to zero voltage for a period equal to one half cycle and conduct the test. During interruption observe the effect on the EUT and record, as appropriate.

Reduce the power supply to 50% of nominal voltage for a period equal to two half cycles and conduct the test. During reductions observe the effect on the EUT and record, as appropriate.

Maximum allowable variations : The difference between the weight indication due to the disturbance and the indication without the disturbance either shall not exceed the values given in paragraph 4(2)(v), or the EUT shall detect and act upon a significant fault.

(ii) *Electrical bursts (fast transient tests)*

Electrical bursts tests (fast transient tests) are carried out for two minutes with a positive polarity and for 2 minutes with a negative polarity according to Tables 7.1, 7.2 and 7.3 given below :

TABLE 7.1

Ports for signal lines and control lines

Environmental phenomena	*Test specification*
Fast transient common mode	0.5 kV (peak) 5/50 ns T_1/T_h 5 kHz rep. Frequency

Note : Applicable only to ports or interfacing with cables whose total length may exceed 3m according to the manufactures functional specification.

TABLE 7.2

Input and Output DC Power Ports

Environmental phenomena	*Test specification*
Fast transient common mode	0.5 kV (peak) 5/50 ns T_1/T_h 5 kHz rep. frequency

Note : Not applicable to battery operated appliances that cannot be connected to the mains while in use.

TABLE 7.3

Input and Output DC Power Ports

Environmental phenomena	*Test specification*
Fast transient common mode	0.5 kV (peak) 5/50 ns T_1/T_h 5 kHz rep. Frequency

A coupling/decoupling network shall be applied for testing AC power ports.

Supplementary information to the test procedures :

Object of the test : To verify compliance with the provisions in paragraph 4(1)(iii) under conditions where electrical bursts (fast transients) are superimposed on the mains voltage while observing the weight indication for a static test load approximately equal to the minimum capacity.

Test procedures in brief :

Precondition : None required.

Condition of the EUT : Normal power supplied and "on" for a time period equal to or greater than the warm-up time specified by the manufacturer. Reset the EUT if a significant fault has been indicated.

Stabilization : Before any test stabilize the EUT under constant environmental conditions.

Weighing test : With the single static load in place record the following with and without the transients :—

(a) date and time

(b) temperature

(c) test load

(d) indications (as applicable).

Maximum allowable variations : The difference between the weight indication due to the disturbance and the indication without the disturbance either shall not exceed the value given in paragraph 4(2)(v) of Part I, or the instrument shall detect and act upon a significant fault.

(iii) *Electrostatic discharge*

Electrostatic discharge tests are carried out with test signals and conditions as given in Table 8 below:

TABLE 8

Environmental phenomena	*Test specification*
Electrostatic discharge	8 kV air discharge 6 kV contact discharge

Note : The 6 kV contact discharge shall be applied to conductive accessible parts. Metallic contacts e.g. in battery compartments or in socket outlets are excluded from this requirement. Contact discharge is the preferred test method. 20 discharges (10 with positive and 10 with negative polarity) shall be applied on each accessible metal part of the enclosure. The time interval between successive discharges shall be at least 10 s. In the case of a non conductive enclosure, discharges shall be applied on the horizontal or vertical coupling planes. Air discharges shall be used where contact discharges cannot be applied. Tests with other (lower) voltages than those given in Table 8 are not required.

Supplementary information to the test procedures :

Object of the test : To verify compliance with the provisions of paragraph 4(1)(iii) under conditions where electrostatic discharges are applied while observing the weight indication for a static test load approximately equal to the minimum capacity.

Test procedures in brief :

Precondition : None required.

Condition of the EUT : Normal power supplied and "on" for a time period equal to or greater than the warm-up time specified by the manufacturer. Reset the EUT if a significant fault has been indicated.

Stabilization : Before any test stabilize the EUT under constant environmental conditions.

Weighing test : With the single static load in place, record the following with and without electrostatic discharge :—

(a) date and time

(b) temperature

(c) test load

(d) indications (as applicable).

Maximum allowable variations : The difference between the weight indication due to the disturbance and the indication without the disturbance either shall not exceed the value given in paragraph 4(2)(v) of Part I or the instrument shall detect and act upon a significant fault.

7. Span stability test [paragraph 4(3)(iii)]

Test method : Span stability.

Object of the test : To verify compliance with the provisions of paragraph 4(3)(iii) after the EUT has been subjected to the performance tests.

Reference to standard : No reference to international standards can be given.

Test procedure in brief : The test consists of observing the variations of error of the EUT under sufficiently constant ambient conditions (reasonably constant conditions in a normal laboratory environment) at various intervals, before, during and after the EUT has been subjected to performance tests.

The performance tests shall include the temperature test and, if applicable, the damp heat test. Other performance tests listed in this Annex may be performed.

The EUT shall be disconnected from the mains power supply, or battery supply where fitted, two times for at least eight hours during the period of the test. The number of disconnections may be increased if the manufacturer specifies so or at the discretion of the approval authority in the absence of any such specification.

In the conduct of this test, the operating instructions for the instrument as supplied by the manu-facturer shall be considered.

The EUT shall be stabilized at sufficiently constant ambient conditions after

	switch-on for at least five hours, and at least sixteen hours after the temperature and damp heat tests have been performed.
Test severities :	Test duration : Twenty eight days or over the period necessary for the conduct of the performance tests, whichever is less. Time t (days) between tests : $0.5 \leq t \leq 10$. Test load : a static test load near maximum capacity (Max); the same test weights shall be used throughout the test.
Maximum allowable variations :	The variation in the indication of the test load shall not exceed 1/2 the absolute value of the mpe for influence factor tests paragraph 2(4) for the test load applied on any of the (n) tests conducted.
Number of tests (n) :	$n \geq 8$. If the test results indicate a trend more than half the permissible variation specified above, conduct additional tests until the trend comes to rest or reverses itself, or until the error exceeds the maximum permissible variation.
Precondition :	None required.
Test equipment :	Verified mass standards.
Condition of the EUT :	Adjust the EUT as close to zero indication as practicable before each test.
Test sequence :	Stabilize all factors at nominal reference conditions. If the instrument is provided with automatic zero-setting it shall not be in operation. Apply the test load (or simulated load) and record the following data :— (a) date and time (b) temperature (c) barometric pressure (d) relative humidity (e) test load (f) indication (g) errors (h) changes in test location and apply all necessary corrections resulting from variations of temperature, pressure, etc. between the various measurements. At the first measurement immediately repeat zeroing and loading four times to determine the average value of error. For the next measurements perform only one, unless either the result is outside the specified tolerance or the range of the five readings of the initial measurement was more than 1/10 of the maximum permissible variation. Repeat this test at periodic intervals during and after the conduct of the various performance tests. Allow full recovery of the EUT before any other tests are performed.

8. Procedure for material tests

(1) Material tests at pattern evaluation [paragraph 5(1)(ii)(a) and paragraph 5(2)]

Operational tests with material shall be done on a complete instrument to assess compliance with the technical requirements of sub-paragraph (3) with material for the test load as specified in paragraph 5(1)(ii)(a).

(i) *Feeding device [paragraph 3(5)]*

Check that the feeding device provides sufficient and regular flow rate.

Check that any adjustable feed device has an indication of the direction of movement corresponding to the sense of the adjustment of the feed (where applicable).

For instruments using the subtractive weighing principle check that residual material retained at the feeding device after each load is delivered, is negligible relative to limits of error.

474 GI/11-120

(ii) *Load receptor [paragraph 3(6)]*

For instruments that weigh material in a separate load receptor prior to discharge to a container, check that the residual material retained at the load receptor after each discharge is negligible relative to limits of error.

Check that manual discharge of the load receptor is not possible during automatic operation.

(2) Material tests at initial verification [paragraph 5(1)(ii)(b) and paragraph 5(3)]

Metrological tests with material shall be done on a complete instrument, fully assembled and fixed in the position in which it is intended to be used and as specified in paragraph 5(1)(ii)(b).

The accuracy class (or classes) shall be determined from the results.

(i) *Requirements for metrological material tests*

Types of loads [paragraph 5(3)(i) and paragraph 6(2)(a)] :	The materials used as the test load shall be as specified in paragraph 6(2)(a).
Mass of test loads and fills [paragraph 6(2)] :	The mass of the test loads and fills shall be as specified in paragraphs 6(2)(a, b and c).
Adjustments [paragraph 6(2) (d)] :	The adjustments shall be set as specified in paragraph 6.(2)(d).
Correction devices [paragraph 6(2)(i)] :	Any correction device shall be operated as specified in paragraph 6(2)(i).
Number of fills [para 6(3)] :	The number of fills shall be as specified in Paragraph 6(3).

(ii) *Methods for metrological material tests (paragraph 6(5)]*

One of the following verification methods shall be used :

(a) Separate verification method : the separate verification method is as defined in paragraph 6(5)(i).

(b) Integral verification method : the integral verification method is as defined in paragraph 6(5)(ii).

(iii) *Procedure for metrological material tests*

STEPS :

(1) Set up the instrument in accordance with paragraph 6(2) (d) and 6(2)(i).

(2) Select a preset value for the fill and set the load value if different from the fill, in accordance with paragraph 6(2). Record the indicated preset value.

(3) Run the instrument to produce a number of fills as specified in paragraph 6(3).

(4) Weigh all the fills by one of the methods in paragraphs 6(5)(i) or 6(5)(ii).

(5) Calculate the average value of all the fills in the test and the preset value error [paragraph 2(3)].

(6) Calculate the deviation of each fill from the average paragraph [2(2)].

(7) Repeat stages (2) to (6) for other loads as specified in paragraph 6(2).

Concerning paragraph 6(7) :	The result of weighing the test fill on the control instrument shall be considered as the conventional true value of the test fill.
Concerning Paragraph 6(8) :	The deviation for automatic weighing used to determine compliance of each fill with the maximum permissible deviation for automatic weighing [paragraph 2(2)] shall be the difference between the conventional true value of the mass of the test fill as defined in paragraph 6(7) and the average value of all the fills in the test.
Concerning paragraph 6(9) :	The preset value error for automatic

weighing used to determine compliance with paragraph 2(3) shall be the difference between the average value of the conventional true value of the mass of the test fills, as defined in para 6(7) and the preset value for the fills.

(iv) *Determination of accuracy class [paragraph 5(2)(v)]*

(1) For each preset value of the test fill, determine the preset value error (i.e. the setting error, se) and the maximum permissible preset value error for class X(1), $mpse_1$:

Then calculate $[se/mpse_1]$ for each preset value of the test fill.

(2) For each preset value of the test fill determine the maximum actual deviation from the average (md) and the maximum permissible deviation from the average for class X(1), mpd_1.

Then calculate md/mpd_1 for each preset value of the test fill.

(3) From (1) determine the maximum value of $[se./mpse_1]$, $[se/mpse_1]$ max

(4) From (2) determine the maximum value of md/mpd_1, $[md/mpd_1]$ max.

(5) Determine the accuracy class (x) such that

$(x) > [se/mpse_1]$ max

and $(x) > [md/mpd_1]$ max

and $(x) = 1 \times 10^k$, 2×10^k, or 5×10^k,

the index k being a positive or negative whole number or zero.

SEVENTH SCHEDULE

HEADING—E

DISCONTINUOUS TOTALIZING AUTOMATIC WEIGHING INSTRUMENTS

(TOTALIZING HOPPER WEIGHERS)

PART I

1. General definitions

(1) Weighing instrument

A measuring instrument that serves to determine the mass of a load by using the action of gravity. According to its method of operation, a weighing instrument is classified as automatic or non-automatic.

(2) Automatic weighing instrument

An instrument that weighs without the intervention of an operator and follows a predetermined programme of automatic processes characteristic of the instrument.

(3) Discontinuous totalizing automatic weighing instrument (totalizing hopper weigher)

An automatic weighing instrument that weighs a bulk product by dividing it into discrete loads, determining the mass of each discrete load in sequence, summing the weighing results and delivering the discrete loads to bulk.

(4) Electronic instrument

An instrument equipped with electronic devices.

(5) Control instrument

A non-automatic weighing instrument used to determine the mass of the product used as the test load during material tests.

2. Construction

Note : In this Part and Part II, the term "device" is applied to any part which uses any means to perform one or more specific functions.

(1) Load receptor

The part of the instrument intended to receive the load.

(2) Electronic parts

(i) *Electronic device*

A device comprised of electronic sub-assemblies and performing a specific function. An electronic device is usually manufactured as a separate unit and is capable of being independently tested.

(ii) *Electronic sub-assembly*

A part of an electronic device comprised of electronic components and having a recognizable function of its own.

(iii) *Electronic component*

The smallest physical entity that uses electron or hole conduction in semi-conductors, gases or in a vacuum.

(3) Indicating device

The part of the instrument that displays the value of a weighing result in units of mass.

(i) *Totalization indicating device*

The part of the instrument that indicates

the sum of consecutive loads weighed and discharged to bulk.

(a) Principal totalization indicating device

The part of the instrument that indicates the sum of all the loads weighed and discharged to bulk.

(b) Partial totalization indicating device

The part of the instrument that indicates the sum of a limited number of consecutive loads delivered to bulk.

(c) Supplementary totalization indicating device

An indicating device with a scale interval greater than that of the principal totalization indicating device and indicating the sum of consecutive loads weighed over a fairly long period of time.

(ii) *Control indicating device*

An indicating device that enables the use of the instrument as a control instrument to weigh discrete loads for control purposes.

(4) Ancillary devices

(i) *Zero-setting device*

The means used to set the weight indicating device to zero when the load receptor is empty.

(a) Non-automatic zero-setting device

A zero-setting device that must be operated manually.

(b) Semi-automatic zero-setting device

A zero-setting device that operates automatically following a manual command.

(c) Automatic zero-setting device

A zero-setting device that operates automatically and without the intervention of an operator.

(ii) *Printing device*

The means to print the value of each discrete load weighed in the load receptor, or the sum of consecutive loads weighed and discharged to bulk or both.

3. Metrological characteristics

(1) Scale-interval

A value expressed in units of mass that is the difference between

(a) the values corresponding to two consecutive scale marks for analogue indication, or

(b) two consecutive indicated values for digital indication.

(I) Totalization scale interval (d_t)

The scale interval of a principal totalization indicating device.

(II) Control scale interval (d)

The scale interval on a control indicating device.

(2) Weighing cycle

The sequence of weighing operations that includes the following :—

(I) one delivery of a load to the load receptor,

(II) a single weighing operation,

(III) the discharge to bulk of a single discrete load.

(3) Automatic weighing range

The range from minimum capacity to maximum capacity.

(I) *Maximum capacity (Max)*

The largest discrete load that can be weighed automatically.

(II) *Minimum capacity (Min)*

The smallest discrete load that can be weighed automatically.

(III) *Target load*

The preset value of the load in the load receptor that causes the flow to stop in each weighing cycle.

(4) Minimum totalized load (Σ_{min})

The value of the smallest bulk load that can be totalized without exceeding the maximum permissible error when the automatic operation is comprised of discrete loads, each within the automatic weighing range.

3(5) Warm-up time

The time between the moment that power is applied to an instrument and the moment at which the instrument is capable of complying with the requirements.

4. Indications and errors

(1) Methods of indication

(i) *Analogue indication*

An indication allowing the determination of an equilibrium position to a fraction of the scale interval.

(ii) *Digital indication*

An indication in which the scale marks are a sequence of aligned figures that do not permit interpolation to a fraction of a scale interval.

(2) Errors

(i) *Error (of indication)*

The indication of an instrument minus the (conventional) true value of the mass.

(ii) *Intrinsic error*

The error of an instrument under reference conditions.

(iii) *Initial intrinsic error*

The intrinsic error of an instrument as determined prior to performance tests and durability evaluations.

(iv) *Fault*

The difference between the error of indication and the intrinsic error of a weighing instrument.

Note 1 : Principally, a fault is the result of an undesired change of data contained in or flowing through an electronic instrument.

Note 2 : From the definition it follows that in this heading a "fault" is a numerical value.

(v) *Significant fault*

A fault greater than d_t.

The following are not considered to be significant faults, namely :—

(a) faults that result from simultaneous and mutually independent cause in the instrument or in its checking facility,

(b) faults that imply the impossibility of performing any measurement,

(c) transitory faults that are momentary variations in the indications which cannot be interpreted, memorized or transmitted as a measurement result, and

(d) faults that are so serious that they will inevitably be noticed by those interested in the measurement.

(vi) *Span stability*

The capability of an instrument to maintain the difference between the indication of weight at maximum capacity and the indication at zero within specified limits over a period of use.

(vii) *Maximum span stability error*

A span stability error greater than one half of the absolute value of the maximum permissible error applicable to the load.

5. Influences and reference conditions

(1) Influence quantity

A quantity that is not the subject of the measurement but which influences the value of the measurand or the indication of the instrument.

(i) *Influence factor*

An influence quantity having a value within the specified rated operating conditions of the instrument.

(ii) *Disturbance*

An influence quantity having a value that falls within the limits specified in this International Recommendation but that falls outside the rated operating conditions of the instrument.

(2) Rated operating conditions

Conditions of use which give the ranges of the influence quantities for which the metrological characteristics are intended to lie within the specified maximum permissible errors.

(3) Reference conditions

A set of specified values of influence factors fixed to ensure valid inter-comparison of the results of measurements.

6. Tests

(1) Material test

A test carried out on a complete instrument using the type of material that it is intended to weigh.

(2) Simulation test

A test carried out on a complete instrument or part of an instrument in which any part of the weighing operation is simulated.

(3) Performance test

A test to verify that the equipment under test (EUT) is capable of accomplishing its intended functions.

(4) Span stability test

A test to verify that the EUT is capable of maintaining its performance characteristics over a period of use.

PART II

1. General

(1) Scope

This specification specifies the requirements and

474 GI/11-121

test methods for discontinuous totalizing automatic weighing instruments (totalizing hopper weighers), [hereafter referred to as "instruments"].

It is intended to provide standardized requirements and test procedures to evaluate the metrological and technical characteristics of an instrument in a uniform and traceable way.

(2) Application

This specification applies to instruments having a load receptor in the form of a hopper.

This Part does not apply to the following types of instruments :—

(a) "weighing-in-motion" instruments,

(b) instruments that totalize the bulk load by multiplying the weight of a preset constant load by the number of weighing cycles.

2. Metrological requirements

(1) Accuracy classes

Instruments shall be divided into four accuracy classes as follows :—

0.2, 0.5 1, 2

(2) Maximum permissible errors

(i) *Automatic weighing*

The maximum permissible errors for each accuracy class shall be the appropriate values in Table 1 given below rounded to the nearest totalization scale interval. Maximum permissible errors apply to loads not less than the minimum totalized load (Σ_{min}).

TABLE 1

Accuracy class	*Percentage of the mass of the totalized load*	
	Verification	*Inspection*
0.2	± 0.10 %	± 0.2 %
0.5	± 0.25 %	± 0.5 %
1	± 0.50 %	± 1.0 %
2	± 1.00 %	± 2.0 %

(ii) *Influence quantities*

The maximum permissible errors applied in tests to assess the effect of influence quantities shall be as specified in Table 2 below :—

TABLE 2

Maximum permissible errors	*Load (m) expressed in totalization scale intervals*
+ 0.5 d_t	$0 \leq m \leq 500$
+ 1.0d_t	$500 < m \leq 2000$
+ 1.5 d_t	$2000 < m \leq 10000$

Digital indications and printed results shall be corrected for the rounding error, and the error shall be determined with an accuracy of at least 0.2 d_t.

(3) Form of the scale interval

The scale intervals of the indicating and printing devices shall be in the form of 1×10^k, 2×10^k, or 5×10^k, "k" being a positive or negative whole number or zero.

(4) Totalization scale interval (d_t)

The totalization scale interval shall be :

(a) not less than 0.01 % of maximum capacity; and

(b) not greater than 0.2 % of maximum capacity.

(5) Minimum value of minimum totalized load (Σ_{min})

The minimum totalized load shall not be less than :

(a) the value of the load for which the maximum permissible error for automatic weighing on initial verification is equal to the totalization scale interval (d_t); and

(b) the minimum capacity (Min).

Note : It results from the first indent above that the maximum permissible error on initial verification (mpe in the following example) for a load equal to Σ_{min} shall not be less than d_t.

Therefore, using table 1, Σ_{min} shall not be less than :

1000 x d_t for class 0.2 instruments,

400 x d_t for class 0.5 instruments,

200 x d_t for class 1 instruments; and

100 x d_t for class 2 instruments.

Example : maximum capacity = 1000 kg

minimum capacity = 200 kg

totalization scale interval = 0.2 kg (see paragraph 2.4)

accuracy class of instrument = 0.5

Σ_{min} 400 x 0.2 = 80 kg

But to satisfy the second indent above :

$\Sigma_{min} \geq$ min = 200 kg

Therefore, in this example the minimum value of the minimum totalized load is 200 kg.

(The values used in this example are not intended to be typical.)

(6) Agreement between indicating and printing devices

For the same load, the difference between the

weighing results provided by any two devices having the same scale interval shall be as follows :—

(a) zero for digital indicating or printing devices;

(b) not greater than the absolute value of the maximum permissible error for automatic weighing for analogue devices.

(7) Influence quantities

(i) *Static temperature*

Instruments shall comply with the appropriate metrological and technical requirements at temperatures from - 10°C to + 45°C.

For special applications, however, the limits of the temperature range may differ from the above provided that this range is not less than 30°C and is specified in the descriptive markings.

Instruments shall be tested in accordance with the static temperatures test in as specified in paragraph 8(3)(i) of Annex A.

(ii) *Mains power supply (AC)*

Instruments that are powered by an AC supply shall comply with the appropriate metrological and technical requirements when operated under variations of voltage from - 15 % to + 10 % of the value marked on the instrument.

Instruments shall be tested in accordance with the mains power supply (AC) test as specified in paragraph 8(3)(iii) of Annex A.

(iii) *Battery power supply (DC)*

Instruments that are powered by a DC supply shall comply with the appropriate metrological and technical requirements in accordance with paragraph 4(3)(viii).

Instruments shall be tested in accordance with the battery power supply (DC) test as specified in paragraph 8(3)(iv) of Annex A.

3. Technical requirements

(1) Suitability for use

Instruments shall be designed to suit the method of operation and the materials for which they are intended.

(2) Security of operation

(i) *Accidental maladjustment*

Instruments shall be constructed so that a maladjustment likely to disturb their metrological performance cannot normally take place without the effect being easily detected.

(ii) *Purging of load receptor*

The design of the load receptor and the operation of the instrument shall be such that the weighing results are not adversely affected by any variation in the quantity of the load remaining in the load receptor after discharge during a weighing cycle.

(iii) *Automatic weighing conditions*

An automatic operation shall be interrupted, printing shall be prevented or marked and a warning signal shall be given in the following cases :—

(a) if the maximum capacity (Max) has been exceeded by more than 9 d; and

(b) if the value of the load to be weighed and discharged to bulk is less than minimum capacity (Min), unless processed as the last discrete load of the transaction.

(iv) *Operational adjustments*

It shall not be possible to make operating adjustments nor to reset the indicating devices during an automatic weighing operation, with the exception of the possibility to interrupt the weighing cycle during testing as described in paragraph 6.3.1.

(v) *Dust extraction*

The operation of a dust extractor shall not affect the result of the measurement.

(vi) *Zero-setting device*

Instruments that do not tare-weigh after each discharge shall be provided with a zero-setting device.

An interlock shall be provided to stop an automatic operation if the zero indication varies by :

(a) $1d_t$ on instruments with an automatic zero-setting device; or

(b) $0.5d_t$ on instruments with a semi-automatic or non-automatic zero-setting device.

A zero-setting device shall be capable of setting zero to $\pm$ 0.25 of the smallest scale interval of all the

indicating devices of the instrument and have a range of adjustment not exceeding 4% of maximum capacity.

(vii) *Fraudulent use*

Instruments shall not have characteristics likely to facilitate their fraudulent use.

(3) Instruments with control indicating devices

For an instrument with a control indicating device, the load receptor shall have the facility to support a quantity of standard weights in accordance with Table 3 given below :—

TABLE 2

Maximum capacity (Max)	*Minimum quantity of standard weights*
Max ≤ 5 t	Max
5 t < Max ≤ 25 t	5 t
25 t < Max ≤ 50 t	20 % Max
50 t < Max	10 t

(4) Totalization indicating and printing devices

Instruments shall include a principal totalization indicating device and may include a supplementary totalization indicating device, partial totalization indicating devices, and printing devices.

On an instrument equipped with a printing device, the following shall apply :—

(a) It shall not be possible to reset the principal totalization indicating device to zero unless the printing device automatically prints the last total indicated before resetting to zero.

(b) An automatic printout of the last total shall be generated if the automatic operation is interrupted and operating adjustments can be made.

(i) Quality of indication

A totalization indicating and printing device shall allow reliable, simple and unambiguous reading of the results by simple juxtaposition and shall bear the name or symbol of the appropriate unit of mass.

(ii) Scale interval

Except for a supplementary totalization indicating device, the scale intervals of all totalization indicating devices shall be the same.

(iii) Supplementary totalization indicating devices

The scale interval of a supplementary totalization indicating device shall be at least equal to ten times the totalization scale interval indicated in the descriptive markings.

(iv) Combined indicating devices

Two or more types of indicating devices may be combined so that the indication required can be displayed on demand provided that it is clearly identified.

(5) Ancillary devices

Ancillary devices shall not affect the indicated totalization(s) representing a bulk load for a transaction.

(6) Sealing

Components that are not intended to be adjusted or removed by the user shall either be fitted with a sealing device or be enclosed. When enclosed, it shall be possible to seal the enclosure.

(7) Descriptive markings

Instruments shall bear the following markings :—

(i) *Marking shown in full*

- identification mark of the manufacturer
- identification mark of the importer (if applicable)
- serial number and type designation of the instrument
- nature of product
- control scale interval (if applicable) .... g or kg or t
- Electrical supply voltage ... V
- Electrical supply frequency ... Hz
- Working fluid pressure (if applicable) kPa or bar
- Operational speed Max and min

(ii) *Markings*

- pattern approval sign in accordance with national requirements
- accuracy class 0.2, 0.5, 1 or 2
- maximum capacity Max = ... g or kg or t
- minimum capacity Min = ... g or kg or t

- minimum totalized load

  •min = ... g or kg or t
- totalization scale interval

  d_t = .. g or kg or t
- Output per hour at maximum operating speed
- Model approval mark

(iii) *Presentation of descriptive markings*

Descriptive markings shall be indelible and of a size, shape and clarity that permit legibility under rated operating conditions.

Markings shall be grouped together in a clearly visible place on the instrument, either on a descriptive plate fixed near the indicating device or on the indicating device itself.

It shall be possible to seal the plate bearing the markings, unless the plate cannot be removed without being destroyed.

(8) Verification marks

(i) *Position*

Instruments shall have a place for the application of verification marks. The following applies for this place :

(a) the part on which the marks are located cannot be removed from the instrument without damaging the marks;

(b) the place shall permit the easy application of the marks without changing the metrological qualities of the instrument; and

(c) the marks shall be visible without requiring that the instrument or its protective covers be moved when it is in service.

(ii) *Mounting*

Instruments required to bear verification marks shall have a verification mark support located as specified above, which shall ensure the conservation of the marks as follows :—

(a) When the mark is made with a stamp, the support may consist of a strip of lead or any other material with similar qualities inserted into a plate fixed to the instrument or in a cavity bored into the instrument;

(b) When the mark consists of an adhesive transfer, a space shall be provided for this purpose.

4. Requirements for electronic instruments

Electronic instruments shall comply with the following requirements, in addition to the applicable requirements of all other clauses.

(1) General requirements

(i) *Rated operating conditions*

Electronic instruments shall be designed and manufactured so that they do not exceed the maximum permissible errors under rated operating conditions.

(ii) *Disturbances*

Electronic instruments shall be designed and manufactured so that when they are exposed to disturbances, either—

(a) significant faults do not occur; or

(b) significant faults are detected and acted upon.

Note : A fault equal to or less than the value specified in paragraph 4(2)(v) of Part I (1 d_t) is allowed irrespective of the value of the error of indication.

(iii) *Durability*

The requirements in paragraphs 4(1)(i) and 4(1)(ii) shall be met durably in accordance with the intended use of the instrument.

(iv) *Evaluation for compliance*

A pattern of an electronic instrument is presumed to comply with the requirements in 4(1)(i), 4(1)(ii) and 4(1)(iii) if it passes the examination and tests specified in Annex A.

(2) Application of requirements for disturbances

(i) The requirements in paragraph 4(1)(ii) may be applied separately to :

(a) each individual cause of significant fault, and/or

(b) each part of the electronic instrument.

(ii) The choice as to whether to apply paragraphs 4(1)(ii)(a) or (b) is left to the manufacturer.

(3) Functional requirements

(i) *Acting upon a significant fault*

When a significant fault has been detected, a visual or audible indication

474 GI/11-122

shall be provided and shall continue until the user takes action or the fault disappears.

Means shall be provided to retain any totalized load information contained in the instrument when a significant fault occurs.

(ii) *Switch-on procedure*

Upon switch-on (in the case of electronic instruments permanently connected to the mains at switch-on of indication), a special procedure shall be performed that indicates all the relevant signs of the indicator in their active and non-active states for a sufficient time to be easily observed by the operator.

(iii) *Influence quantities*

An electronic instrument shall comply with the requirements paragraph 2(7) and in addition it shall maintain its metrological and technical characteristics at a relative humidity of 85 % at the upper limit of the temperature range of the instrument.

(iv) *Disturbances*

When an electronic instrument is subjected to the disturbances specified in Annex A, either of the following shall apply :

(a) the difference between the weight indication due to the disturbance and the indication without the disturbance (intrinsic error) shall not exceed the value specified in paragraph 4(2)(v) of part I (1 d_t)

(b) the instrument shall detect and act upon a significant fault.

(v) *Warm-up time*

During the warm-up time of an electronic instrument, there shall be no indication or transmission of the weighing result and automatic operation shall be inhibited.

(vi) *Interface*

An instrument may be equipped with an interface permitting the coupling of the instrument to external equipment. When an interface is used, the instrument shall continue to function correctly and its metrological functions shall not be influenced.

(vii) *Mains power supply (AC)*

An instrument that operates from the mains shall, in the event of a power failure, retain the metrological information contained in the instrument at the time of failure for at least 24 hours. A switch-over to an emergency power supply shall not cause a significant fault.

(viii) *Battery power supply (DC)*

An instrument that operates from a battery power supply shall, whenever the voltage drops below the manufacturer's specified value, either continue to function correctly or automatically be put out of service.

(4) Examination and tests

The examination and testing of an electronic weighing instrument is intended to verify compliance with the applicable requirements of these specifications and especially with the requirements in paragraph 4.

(i) *Examination*

An electronic weighing instrument shall be examined to obtain a general appraisal of the design and construction.

(ii) *Performance tests*

An electronic weighing instrument or electronic device, as appropriate, shall be tested as specified in Annex A to determine its correct functioning.

Tests are to be conducted on the whole instrument except when either the size or configuration or both of the instrument does not lend itself to testing as a unit. In such cases, the separate electronic devices shall be subjected to testing. It is not intended that electronic devices be further dismantled for separate testing of components. In addition, an examination shall be carried out on the fully operational weighing instrument or, if necessary, on the electronic devices in a simulated set-up that sufficiently represents the weighing instrument. The equipment shall continue to function correctly as specified in Annex A.

(iii) *Span stability tests*

The instrument shall be subjected to span stability tests at various intervals, i.e. before, during and after being subjected to performance tests.

When the instrument is subjected to span stability test specified in paragraph 9 of Annex A—

(a) the maximum allowable variation in the errors of indication shall not exceed half the absolute value of the maximum permissible error specified in paragraph 2(2)(ii), Table 2 for the test load applied on any of the n measurements;

(b) where the differences of the results indicate a trend more than half the allowable variation specified above, the test shall be continued until the trend comes to rest or reverses itself, or until the error exceeds the maximum allowable variation.

5. Metrological controls

(1) Pattern evaluation

(i) *Documentation*

The application for pattern evaluation shall include documentation comprising :

(a) metrological characteristics of the instrument;

(b) a standard set of specifications for the instrument;

(c) a functional description of the components and devices;

(d) drawings, diagrams and general software information (if applicable), explaining the construction and operation;

(e) any document or other evidence demonstrating that the design and construction of the instrument complies with the requirements of these specifications.

(ii) *General requirements*

Pattern evaluation shall be carried out on at least one and normally, not more than three instruments that represent the definitive pattern. At least one of the instruments shall be completely installed at a typical site and at least one of the instruments or the major component of an instrument shall be submitted in a form suitable for simulation testing in a laboratory. The evaluation shall consist of the tests specified in paragraph 5(1)(iii).

(iii) *Pattern evaluation tests*

(a) Instruments shall comply with :

- The metrological requirements in paragraph 2, particularly with reference to maximum permissible errors, when the instrument is operated in accordance with the manufacturer's specifications for range and product(s);
- The technical requirements in paragraph 3 including the requirement for security of operation in paragraph 3(2). Additionally electronic instruments shall comply with the requirements in paragraph 4.

(b) The appropriate metrological authority :

- shall conduct the tests in a manner that prevents unnecessary commitment of resources;
- shall permit, when the same instrument is involved; the result of these tests to be assessed for initial verification; is advised to accept, with the consent of the applicant, test data obtained from other metrological authorities without repeating the tests;
- shall ensure that an instrument that can be operated as a non-automatic weighing instrument meets the relevant requirements for class III or class IV of non-automatic weighing instruments.

(c) Material tests

Instruments shall be subjected to in-situ material tests in accordance with either the separate verification method as specified in paragraph 6(2)(ii) of Annex A or the integral verification method as specified in paragraph 6(2)(iii) of Annex A

Where the material test is conducted using the integral control instrument the integral verification method weighing test in paragraph 6(2)(iii)(a) of Annex A shall be performed.

In-situ material tests shall be carried out as follows :

- in accordance with the descriptive markings;
- under the rated operating conditions for the instrument;
- not less than three material tests shall be conducted, one at minimum

capacity, one at maximum capacity and one at close to the minimum totalized load (Smin);

- each test shall be conducted at the maximum rate of weighing cycles per hour;
- with a test load representative of the range and type of products for which the instrument is likely to be used or a product for which the instrument is specified to be used;
- with a quantity of material not less than the minimum totalized load (Smin) marked on the instrument;
- when the quantity of material equal to the minimum totalized load (Smin) can be totalized in less than five weighing cycles, the following additional material tests shall be conducted, five cycles each at maximum capacity (Max) and five cycles at minimum capacity (Min);
- equipment near the automatic weighing instrument, including conveyors, dust collection systems etc. that are in use when the instrument is in normal operation, shall be in use;
- if the instrument can divert weighed material through alternative discharge facilities, the test program shall be performed for each alternative unless it can be established that the weigh hopper is not affected for example by different air flow.

When a load receptor cannot be loaded with sufficient standard weights to verify and determine the rounding error of the control instrument indicating device or partial indicating device, then the instrument shall be subjected to material tests by the separate verification method. For this method an appropriately designed control instrument shall be available so that the material tests can be effectively and efficiently conducted.

The error for automatic weighing shall be the difference between the conventional true value of the mass of the test load as defined in paragraph 6(2)(ii) or 6(3)(iii) as appropriate and the indicated weight observed and recorded as defined in paragraph 6(2)(i) or 6(3)(ii) as appropriate.

The maximum permissible error for automatic weighing shall be as specified in paragraph 2(2)(i) Table 1 for initial verification and as appropriate for the class of instrument.

(iii) *Simulation tests*

Influence quantities shall be applied during simulation tests in a manner that will reveal an alteration of the weighing result for any weighing process to which the instrument could be applied, in accordance with :

- paragraph 2(7) for all instruments;
- paragraph 4 for electronic instruments.

When conducting such tests on a load cell or on an electronic device equipped with an analogue component, the maximum permissible error for the device under test shall be 0.7 times the appropriate value specified in Table 2.

Note : Since the requirements of this paragraph apply only to the instrument submitted for pattern evaluation and not to those subsequently submitted for verification, the means used to determine the appropriate maximum permissible error or maximum allowable variation has been exceeded will be decided and mutually agreed upon between the Metrological Authority and the applicant. Following are examples of these means :

(a) an adaptation of the totalization indicating device to give greater resolution than that of the totalization scale interval;

(b) the use of change point weights;

(c) any other means mutually agreed upon.

(iv) *Provision of means for testing*

For the purposes of testing, the applicant may be required to furnish the Metrological Authority with the material, handling equipment, qualified personnel, and a control instrument.

(v) *Place of testing*

Instruments submitted for pattern approval may be submitted at the following places :

(a) the premises of the Metrological Authority to which the application

has been submitted;

(b) any other suitable place mutually agreed upon by the Metrological Authority and the applicant.

(2) Tests to be carried out during verification and re-verification

(i) *Tests*

Instruments shall comply with the requirements in paragraph 2 [except paragraph 2(7)] and paragraph 3 for any product(s) for which they are intended and when operated under normal conditions of use.

Tests shall be carried out insitu, in a normal installation. The instrument shall be installed so that an automatic weighing operation will be virtually the same for testing as it is for a transaction.

(a) Non-automatic weighing instruments

When an instrument can be operated as a non-automatic weighing instrument, it shall meet the relevant requirements for class III or class IV of non-automatic weighing instruments.

(b) Material tests

Instruments shall be subjected to in-situ material tests in accordance with either the separate verification method as specified in paragraph 6(2)(ii) of Annex A or the integral verification method as specified in paragraph 6(2)(iii) of Annex A.

Where the material test is conducted using the integral control instrument the integral verification method weighing test in paragraph 6(2)(iii)(a) of Annex A shall be performed.

Insitu material tests shall be carried out as follows :—

- in accordance with the descriptive markings;
- under the rated operating conditions for the instrument;
- not less than three material tests shall be conducted, one at minimum capacity, one at maximum capacity and one at close to the minimum totalized load (•min);
- each test shall be conducted at the maximum rate of weighing cycles per hour;
- with a test load of products or products for which the instrument is intended;
- with a quantity of material not less than the minimum totalized load (•min) marked on the instrument;
- when the quantity of material equal to the minimum totalized load (•min) can be totalized in less than five weighing cycles, the following additional material tests shall be conducted, five cycles each at maximum capacity (Max) and five cycles at minimum capacity (Min);
- equipment near the automatic weighing instrument, including conveyors, dust collection systems etc. that are in use when the instrument is in normal operation, shall be in use;
- if the instrument can divert weighed material through alternative discharge facilities, the test program shall be performed for each alternative unless it can be established that the weigh hopper is not affected for example by different air flow. Testing for the full range of products only needs to be done for one discharge facility.

When a load receptor cannot be loaded with sufficient standard weights to verify and determine the rounding error of the control instrument indicating device or partial indicating device, then the instrument shall be subjected to material tests by the separate verification method. For this method an appropriately designed control instrument shall be available so that the material tests can be effectively and efficiently conducted.

The error for automatic weighing shall be the difference between the conventional true value of the mass of the test load as defined in paragraph 6(2)(ii) or paragraph 6(3)(iii), as appropriate and the indicated weight observed and recorded as defined in paragraph 6(2)(i) or paragraph 6(3)(ii), as appropriate.

The maximum permissible error for automatic weighing shall be as specified

474 GI/11-123

in paragraph 2(2)(i) Table 1 for Initial verification as appropriate for the class of instrument.

(ii) *Provision of means for testing*

For the purposes of testing, the applicant shall be required to furnish with the material, handling equipment, qualified personnel, and a control instrument.

(3) Tests to be carried out during inspection

Inspection shall be carried out in accordance with the same provisions as in paragraph 5(2) for verification, with the exception that the inspection maximum permissible errors shall be applied.

6. Test methods

(1) Control instrument and test standards

The control instrument and standard weights used for tests shall ensure the checking of the test load to an error not greater than :

(a) one-third of the maximum permissible error for automatic weighing when the control instrument or the device used for control purposes is verified immediately prior to the material test, or

(b) one-fifth of the maximum permissible error for automatic weighing in all other cases.

Note : When using the integral verification method, a sub-division of the test load is unavoidable and this may also be true when using the separate verification method. When calculating the conventional true value of the mass of the test load, it is necessary to consider the increased uncertainty due to sub-dividing the test load.

(2) Separate verification method

With this method, an instrument other than the instrument being verified is used to determine the conventional true value of the mass of the test load.

(i) *Indicated weight*

A test load shall be weighed as an automatic bulk to bulk weighing operation and the indicated weight value on the principal totalization indicating device shall be observed and recorded.

(ii) *Mass of the test load*

The test load shall be weighed on a control instrument and the result shall be considered as the conventional true value of the mass of the test load.

(3) Integral verification method

With this method, the instrument being verified is used to determine the conventional true value of the mass of the test load.

The integral verification method shall be conducted by using either of the following :

- a partial totalization indicating device with standard weights to assess the rounding error; or
- an appropriately designed control indicating device.

(i) *Interruption of automatic operation*

An automatic weighing operation of a test load shall be initiated following the same procedure as for weighing bulk to bulk. However, the automatic operation shall be interrupted twice during each weighing cycle necessary to weigh and discharge a sub-division of the test load.

An automatic operation shall not be interrupted during consecutive weighing cycles if the instrument is installed as an air-enclosed system.

(i)(a) Pre-discharge (gross) interrupt

After the load receptor has been loaded and the instrument has automatically processed a gross weight, the automatic operation shall be interrupted. When the load receptor has stabilized, the gross weight indicated or determined by balancing with standard weights shall be recorded and the instrument switched back to automatic operation.

(b) Post-discharge (tare) interrupt

After the load has been discharged and the instrument has automatically processed a tare weight, the automatic operation shall be interrupted. When the discharged load receptor has stabilized, the tare weight indicated or determined by balancing with standard weights shall be recorded and the instrument switched back to automatic operation.

(ii) *Indicated weight*

The principal totalization indicating device shall be used in obtaining the indicated weight of the test load.

(iii) *Mass of the test load*

For each discharge, the tare weight value subtracted from the gross weight value is

the net weight of the material discharged. A summation of the net weight values of all the discharges in the test load shall be the conventional true value of the mass of the test load.

ANNEXURE A

TESTING PROCEDURES FOR DISCONTINUOUS TOTALIZING AUTOMATIC WEIGHING INSTRUMENTS

(Mandatory)

Meaning of symbols :

I = Indication

L= Load

Δ L= Additional load to next changeover point

P= I + 0.5d - ΔL = Indication prior to rounding

E= P - L = error

Eo= Error calculated at zero

Ec= Corrected error

mpe= Maximum permissible error

EUT= Equipment under test

1. Documentation [Paragraph 5(1)(i)]

Review the documentation that is submitted, including necessary photographs, drawings, diagrams, general software information, relevant technical and functional description of main components, devices etc. to determine if it is adequate and correct. Consider the operational manual.

2. Comparing construction with documentation [Paragraph 5(1)(i)]

Examine the various devices of the instrument to ensure compliance with the documentation.

3. Initial examination

(1) Metrological characteristics

Note metrological characteristics according to the test report format.

(2) Descriptive markings [Paragraph 3(7)]

Check the descriptive markings according to the checklist given in the test report format.

(3) Sealing and verification marks [Paragraph 3(6) and Paragraph 3(8)]

Check the arrangements for sealing and verification marks according to the checklist given in the test report format.

4. General

(1) General requirements for electronic instruments under test (EUT)

(i) *Power supply*

Energize the EUT for a time period equal to or greater than the warm-up time specified by the manufacturer and maintain it energized for the duration of the test.

(ii) *Zero-setting*

Adjust the EUT as closely as practicable to zero prior to each test, and do not readjust it at any time during the test, except to reset it if a significant fault has been indicated.

(iii) *Temperature*

The tests shall be performed at a steady ambient temperature, usually normal room temperature unless otherwise specified.

The temperature is deemed to be steady when the difference between the extreme temperatures noted during the test does not exceed one-fifth of the temperature range of the instrument without being greater than 5°C and the rate of change does not exceed 5°C per hour.

The handling of the instrument shall be such that no condensation of water occurs on the instrument.

(2) Control instrument and test standards [Paragraph 6(1)]

(i) *Control instruments*

A control instrument meeting the requirements of clause Paragraph 6(1) shall be used for conduct of material tests. Where necessary, standard weights may be used to assess the rounding error.

(ii) *Use of standard weights to assess rounding error*

For instruments with digital indication having scale interval d, changeover points may be used to interpolate between scale intervals i.e. to determine the indication of the instrument, prior to rounding, as follows.

At a certain load, L, the indicated value, I, is noted. Additional weights of for example 0.1 d are successively added until the indication of the instrument is increased unambiguously by one scale interval (I + d). The additional load Δ L added to the load receptor gives the

indication, P, prior to rounding by using the following formula :—

$P = I + 0.5d - \Delta L$

The error prior to rounding is :

$E = P - L$

thus $E = (I + 0.5d - \Delta L) - L$

The corrected error prior to rounding is :

$E_C = E - E_O$

Where E_O is the error calculated at zero.

Example: an instrument with a scale interval, d, of 1 kg is loaded with 100 kg and thereby indicates 100 kg. After adding successive weights of 0.1 kg, the indication changes from 100 kg to 101 kg at an additional load of 0.3 kg. Inserted in the above formula these observations give :

P = (100 + 0.5 - 0.3) kg = 100.2 kg

Thus the true indication prior to rounding is 100.2 kg, and the error is :

E = (100.2 - 100) kg =0.2

If the error prior to rounding as calculated above was E_O =+0.4 kg, the corrected error is :

E_C = 0.2 kg - (+0.4 kg) = 0.2 kg

5. Test program

(1) Pattern evaluation [Paragraph 5(1)]

All tests in sections Paragraph 6 to Paragraph 9 of this Annex shall normally be applied for pattern evaluation.

Paragraph 6(1) of this Annex may be omitted if the integral instrument is not to be used as the control indicating device for material testing.

Tests in Paragraph 7(1), Paragraph 8(3)(ii), Paragraph 8(3)(iii) (AC supply), Paragraph 8(3)(iv) (DC supply) and Paragraph 8(4)(i) to Paragraph 8(4)(iv) of this Annex apply only for instruments that have an electrical power supply.

(2) Initial verification [Paragraph 5(2)]

Only paragraph 6 of this Annexure 'Metrological performance tests' is normally required for initial verification tests.

6. Metrological performance tests

Metrological performance tests shall be applied to the complete instrument under normal operating conditions, except when the size and/or configuration of the instrument does not lend itself to testing as a unit. In such cases, the separate electronic devices shall be subjected to testing.

(1) Zero-setting device [Paragraph 3(2)(vi)]

(i) *General*

Zero-setting may be by more than one mode, for example :

(a) Non-automatic or semi-automatic zero;

(b) Automatic zero at switch-on;

(c) Automatic zero at start of automatic operation;

(d) Automatic zero as part of weighing cycle.

It is normally only necessary to test the range and accuracy of zero-setting in one mode. If zero is set as part of the automatic weighing cycle then this mode shall be tested. To test automatic zero it is necessary to allow the instrument to operate through the appropriate part of the automatic cycle and then to halt the instrument before testing.

(ii) *Range of zero-setting*

Non-automatic and semi-automatic zero-setting

Positive range

With the load receptor empty, set the instrument to zero. Place a test load on the load receptor and use the zero-setting device. Continue to increment the test load until the device fails to re-zero. The maximum load that can be re-zeroed is the positive portion of the zero-setting range.

Negative range

Steps :

(a) Remove any load from the load receptor and set the instrument to zero. Then, if possible remove non-essential components of the load receptor, such that the instrument cannot be re-zeroed by use of the zero setting device. (If this is not possible then any mass that can be removed without disabling the zero function may be considered as the negative portion of the zero-setting range).

(b) Add weights to the load receptor until the instrument indicates zero again.

(c) Then remove weights and, after each weight is removed, use the zero-setting device. The maximum load that can be removed while the instrument can still be re-zeroed by the zero-setting device, is the negative portion of the zero-setting range.

(d) Alternatively, and if it is not possible to test the negative range of zero-setting by removing parts of the

instrument, then the instrument may be temporarily recalibrated with a test load applied before proceeding to step (c) above. (The test load applied for the temporary recalibration should be greater than the permissible negative zero-setting range which can be calculated from the result of the positive range test.

(e) If it is not possible to test the negative zero-setting range by these methods then only the positive part of the zero-setting range need be considered.

(ii) *Reassemble or recalibrate the instrument for normal use after the above tests*

The zero-setting range is the sum of the positive and negative portions.

(iii) *Accuracy of zero-setting*

(a) Set the instrument to zero.

(b) Add weights to the load receptor to determine the additional load at which the indication changes from zero to one scale interval above zero.

(c) Calculate the error at zero according to the description in Paragraph 4(2) of this Annex.

(2) Material tests [Paragraph 5(1)(iii)(b) and Paragraph 5(2)(i)(b)]

(i) *Material test requirements*

Material tests shall be conducted with the material, test load, requirements and methods in :

(a) Paragraph 5(1)(iii)(b) for pattern examination;

(b) Paragraph 5(2)(i)(b) for initial verification and in-service inspection;

(c) Paragraph 6(2)(ii) or 6(2)(iii) of this Annex (using one of the methods therein).

(ii) *Separate verification method*

For this method a separate control instrument is used to weigh the material either before or after it is weighed on the discontinuous totalizing automatic weighting instrument.

(iii) *Integral verification method*

For this method the integral control instrument is used for static weighting of material test loads by use of a special facility to interrupt operation during the automatic process.

(a) Integral verification method weighing test

The weighing performance may be determined as follows, prior to the material tests, when the integral verification method is to be used for determining the errors in material testing.

Apply test loads from zero up to and including Max, and similarly remove the test loads back to zero. When determining the initial intrinsic error, at least 10 different test loads shall be selected, and for other weighing tests at least 5 shall be selected. The test loads selected shall include Max and Min so that the errors may be determined for the nominal hopper loads that will be used in the material tests.

Determine the error at each test load using the procedure in Paragraph 4(2)(ii) of this Annex if necessary to obtain the accuracy requirements of Paragraph 4(2)(i) of this Annex.

It should be noted that when loading or unloading weights the load shall be progressively increased or decreased.

Errors of indication shall be recorded and taken into account when determining the errors in material testing.

(b) Substitution material

Apply test loads from zero up to and including the maximum portion of standard weights.

Determine the error [Paragraph 4(2) of this Annex] and then remove the weights so that the no-load indication is reached.

Substitute the previous weights with substitution material until the same changeover point as used for the determination of the error is reached. Repeat the above procedure until Max of the instrument is reached.

474 GI/11-124

Unload in reverse order to zero, i.e. unload the weights and determine the changeover point. Load the weights back on and remove the substitution material until the same changeover point is reached. Repeat this procedure until no-load indication is reached.

Similar equivalent procedures may be applied.

(c) Method

(c-1) Automatic gross weighing

Automatic operation is interrupted after the filling of the weigh hopper and completion of the automatic gross weighing but before discharge of the hopper. Thus the hopper remains loaded.

(c-2) Static gross indication

Then, all surrounding equipments such as dust extractors shall be stopped. When the system has come to a complete rest such that the conditions are identical to those for non-automatic testing, the static control weighing indication shall be obtained.

If necessary, standard weights may be used to interpolate between scale intervals. The static control indication shall be corrected for the errors determine in Paragraph 6(2)(iii)(a) of this Annex (for increasing loads)

(c-3) All surrounding equipment is started up again.

(c-4) Automatic tare weighing

Automatic operation is interrupted after the discharge of the weigh hopper and completion of the automatic tare weighing but before the hopper is loaded again.

(c-5) Static tare indication

Repeat stage (2) with an empty hopper. The static indication shall be corrected for the errors determined in Paragraph 6(2)(iii)(a) of this Annex (for decreasing loads).

(c-6) The complete system is started up again and stages (1) through (5) are repeated.

(c-7) The net weight of the material delivered at each cycle is determined by subtracting the corrected indication obtained at (5) from the corrected indication obtained at (2).

(c-8) The conventional true value of the mass of the total test load is determined by summation of the net weights obtained at each cycle.

If the instrument is installed in an air-enclosed system, the moving mass of material causes air turbulence that can affect the weighing results. To ensure that such an instrument is tested in normal conditions of use, the automatic operation shall not be interrupted during consecutive weighing cycles. In this case it is necessary for the automatic weighing made at stages (2) and (4) to be displayed or recorded so that a separate total may be derived for the automatic weighing which has also been carried out under static conditions.

(iv) *Material test procedure [Paragraph 5(1)(iii)(a) and Paragraph 5(2)(i)(b)]*

The test procedure shall be as follows :—

(a) Start up the automatic weighing system, including the surrounding equipment which is normally in use when the instrument is itself in use.

(b) Run the system for five weigh cycles (or more if necessary) to ensure normal working conditions.

(c) Halt the automatic weighing system and record the indication of totalized weight.

(d) Run the weighing system for a number of weighing cycles as specified for each test in Paragraph 6(2)(i) of this Annex, ensuring that the processed material can be weighed on the control instrument (integral or separate) in accordance with one of the alternative methods of Paragraph 6(2)(ii) of this Annex or 6(2)(iii) of this Annex.

(e) Halt the weighing system, and record the final indication of totalized weight.

(f) Determine the indicated totalized weight for the test from the difference between the indication at start (3) and finish (5).

(g) Repeat the above procedure for further tests as specified in Paragraph 6(2)(i)(d) of this Annex.

(h) Determine the material test error from the difference between the indicated totalized weight as determined in (6) and the total weight of material determined using the control instrument as in (4).

(v) *Calculation of material test error [Paragraph 5(1)(iii)(a) and Paragraph 5(2)(i)(b)]*

When calculating the error it is necessary to consider the scale interval of the control indicating device and the number of sub-divisions of the test load.

Separate verification method [Paragraph 6(2)]

The weight value(s) on the separate control instrument is noted.

Integral verification method [Paragraph 6(3)]

A The weight values obtained under static conditions on the control indicating device or those values obtained by balancing with standard weights are noted and totalized. For each weighing cycle, the net value is the difference between the values obtained in stages (2) and (5) in Paragraph 6(2)(iii)(c).

B The weight values obtained automatically on the principal totalization indicating device are noted and totalized. For each weighing cycle, the net value is the difference between the values obtained in (1) and (4) in Paragraph 6(2)(iii)(c).

For each method, the difference between the values obtained from the totalization indication and from the separate control instrument or between procedures A and B in the integral verification method, represents the automatic weighing error. This is the value that shall be used for comparison with the appropriate maximum permissible error for automatic weighing in Paragraph 2(2)(i).

7. Additional functionality

(1) Warm-up time test [Paragraph 4(3)(v)]

(i) Disconnect the instrument from the supply for a period of at least 8 hours prior to the test.

(ii) Reconnect the instrument and switch on while observing the control indicating device (if present) and the totalization indicator(s). Verify that it is not possible to initiate automatic weighing or printout until all indicators have stabilized, or until completion of the warm-up time if this is specified by the manufacturer.

(iii) As soon as the indication of the control indicating device (if present) has stabilized, set the instrument to zero and determine the error of zero setting according to Paragraph 6(1)(iii) of this Annex.

(iv) Apply a load close to Max. Determine the error by the method in Paragraph 4(2) of this Annex.

(v) Repeat stages (3) and (4) after 5, 15 and 30 minutes.

(2) Agreement between indicating and printing devices [Paragraph 2(6)]

During the course of the tests verify that for the same load, the difference between any two indicating devices having the same scale interval is as follows :—

- Zero for digital indicating or printing devices;
- Not greater than the maximum permissible error for analogue devices.

(3) Automatic mode interlocks [Paragraph 3(2)(iv)]

Verify that it is not possible to make operating adjustments nor to reset the indicating devices during an automatic weighing operation.

(4) Printer interlocks [Paragraph 3(4)]

If the instrument is equipped with a printing device, verify that :

(i) The principle totalization device cannot be reset to zero unless the printing device automatically records the total. Test by disabling the printer and attempting to reset the principle totalization indicator;

(ii) An automatic printout of the total is generated if the automatic operation is interrupted.

(5) Battery power supply interlocks [Paragraph 4(3)(viii)]

Reduce power supply voltage until the instrument ceases to operate or ceases to give a weight indication. Verify that no malfunction or significant fault occurs before the instrument is thus put out of service. Measure and record the voltage value when the instrument ceases to operate or ceases to give a weight indication and compare this measured value with the manufacturer's specified value.

(6) Retention of total after power failure [Paragraph 4(3)(vii)]

Switch off power to the instrument while the principle totalization device is indicating a total of not less than •min. Verify that this total is retained for at least 24 hours.

(7) Zero offset interlock [paragraph 3(2)(vi)]

(i) *Positive offset*

Set the instrument to zero by the method used for the tests in Paragraph 6(1)(ii) and 6(1)(iii) of this Annex. Add a load to the load receptor of > d_t, for instruments with an automatic zero-setting device, or > 0.5 d_t, for instruments without an automatic zero-setting device. Confirm that automatic operation is no longer possible.

(ii) *Negative offset*

Add a load to the load receptor of > d_t for instruments with an automatic zero-setting device, or > 0.5 d_t for instruments without an automatic zero-setting device.

Set the instrument to zero by the method used for the tests in paragraph 6(1)(ii) and 6(1)(iii) of this annex. Remove the test weights and confirm that automatic operation is no longer possible.

8. Influence factor and disturbance tests

(1) General

It is generally not possible to apply the influence factors or disturbances to an instrument which is processing material automatically. The instrument shall therefore be subjected to the influence factors or disturbances under static conditions or simulated operation as defined herein. The minimum requirements for simulators are listed under the test equipment heading for each test. The permissible effects of the influence factors or disturbances, under these conditions, are specified for each case. Where it is possible to conduct the tests on a complete instrument under normal operation then this is the preferred option.

After each test the instrument shall be allowed to recover sufficiently before the following test.

The operational status of the instrument or simulator shall be recorded for each test.

Simulators shall be defined in terms of hardware and functionality by reference to the instrument under test, and by any other documentation necessary to ensure reproducible test conditions and this information shall be attached to or traceable from the test report.

(2) Simulator requirements

(i) *General*

Simulators shall be designed to enable verification of the accuracy of the weighing function an the integrity of the totalization storage and indicating function. The automatic process control and data processing functions should be verified where possible.

Where possible the simulator should include all electronic elements of the weighing and weight processing system. It should also include the load cell and a means to apply standard test loads. Where this is not possible, e.g. for high capacity instruments, then a load cell simulator may be used or alternatively the load cell interface may be modified to incorporate a scaling factor to give the design output for a small test load.

Repeatability and stability of a load cell simulator should make it possible to determine the performance of the instrument with at least the same accuracy as and when the instrument is tested with weights.

(ii) *Weighing function*

The weighing function may be verified by observation of the control indicating device, if available, during application of the influence factors or disturbances. Alternatively the totalization indicator may be observed while the total is being incremented by continually adding the result of weighing a static load during application of the influence factors or disturbances. This may be achieved by special test software or by manual intervention or combinations thereof. Other methods which enable the weighing function to be verified may be used as appropriate. The maximum permissible errors, in terms of mass, will be the same regardless of the method used.

(iii) *Totalization storage and indication function*

The simulator must display a recorded total of not less than the minimum totalized load, •min. It must be verified that the recorded total is retained during and after application of influence factors or disturbances. Transient errors that are

record and temporary failure of indication when disturbances are applied are acceptable.

(3) Influence factor tests

SUMMARY OF TESTS

	Test	*Characteristic under test*	*Conditions applied*
(i)	Static temperature	Influence factor	mpe(*)
(ii)	Damp heat, steady state	Influence factor	mpe
(iii)	Mains power supply voltage variation (AC)	Influence factor	mpe
(iv)	Battery power supply voltage variation (DC)	Influence factor	mpe

(*) mpe : maximum permissible error

(i) *Static temperature tests [Paragraph 2(7)(i)]*

Static temperature tests are carried out according to Table 4.

TABLE 4

Environmental phenomena	*Test specification*
Temperature	Reference of 20°C
	Specified high for 2 hours
	Specified low for 2 hours
	5°C
	Reference of 20°C

SUPPLEMENTARY INFORMATION TO THE TEST PROCEDURES

Object of the test : To verify compliance with the provisions in paragraph 2(7)(i) under conditions of dry heat (non condensing) and cold.

Test procedures in brief :

Precondition : Sixteen hours.

Condition of the EUT : Normal power supplied and "on" for a time period equal to or greater than the warm-up time specified by the manufacturer. Power is to be "on" for the duration of test.

Stabilization : Two hours at each temperature under "free air" conditions.

Temperature : As specified in paragraph 2(7)(i).

Temperature sequence : Reference temperature of 20°C;

Specified high temperature;

Specified low temperature;

A temperature of 5°C;

Reference temperature of 20°C

Number of test cycles : At least one cycle.

Weighing test : Adjust the EUT as close to zero indication as practicable prior to the test (if an automatic zero-tracking device is connected, adjust it to a value near zero). The EUT shall not be readjusted at any time during the test.

The EUT shall display a recorded total not less than the minimum totalized load, Σ_{min}.

After stabilization at the reference temperature and again at each specified temperature, apply at least five different test loads or simulated loads and record :

(a) date and time;

(b) temperature;

(c) relative humidity;

(d) test load;

(e) indications (as applicable);

(f) errors;

(g) functional performance.

Maximum allowable variations : All functions shall operate as designed.

All errors shall be within the maximum permissible errors specified in Table 2.

(ii) *Damp heat, steady state [paragraph 4(3)(iii)]*

Damp heat, steady state tests are carried out according to basic standard according to Table 5 given below :—

474 GI/11-125

TABLE 5

Environmental phenomena	*Test specification*
Damp heat, steady state Upper limit temperature and relative humidity of 85 % for 2 days (48 hours)	

SUPPLEMENTARY INFORMATION TO THE TEST PROCEDURES

Object of the test :	To verify compliance with the provisions in paragraph 4(3)(iii) under conditions of high humidity and constant temperature.
Precondition :	None required.
Condition of the EUT :	Normal power supplied and "on" for a time period equal to or greater than the warm-up time specified by the manufacturer. Power is to be "on" for the duration of the test.
	Adjust the EUT as close to zero indication as practicable prior to the test (if an automatic zero-tracking device is connected, adjust it to a value near zero).
	The EUT shall not be readjusted at any time during the test.
	The EUT shall display a recorded total not less than the minimum totalized load, Σ_{min}.
	The handling of the EUT shall be such that no condensation of water occurs on the EUT.
Stabilization :	Three hours at reference temperature and 50% humidity.
	Two days (48 hours) at the upper limit temperature as specified in paragraph 2(7)(l).
Temperature :	Reference temperature of 20°C and at the upper limit as specified in paragraph 2(7)(l).
Relative humidity :	50% at reference temperature.
	85% at upper limit temperature.
Temperature-humidity sequence :	Reference temperature of 20°C at 50% humidity. The upper limit temperature at 85% humidity;
	Reference temperature of 20°C at 50% humidity.
Number of test cycles :	At least one cycle.
Weighing test and test sequence:	After stabilization of EUT at reference temperature and 50% humidity, apply at least five different test loads or simulated loads and record :
	(a) date and time;
	(b) temperature;
	(c) relative humidity;
	(d) test load;
	(e) indications (as applicable);
	(f) errors;
	(g) functional performance.
	Increase the temperature in the

chamber to the upper limit and increase the relative humidity to 85%. Maintain the EUT at no load for a period of two days (48 hours). Following the two days, apply at least five test loads and record the data as indicated above. Allow full recover of the EUT before any other tests are performed.

Maximum allowable variations: All errors shall be within the maximum permissible errors specified in Table 2

(iii) *Mains power supply voltage variation (AC) [paragraph 2(7)(ii)]*

Power voltage variation tests are carried out according to Table 6 given below :—

TABLE 6

Environmental phenomena	*Test specification*
	Reference voltage
	Reference voltage
Voltage variation	+10%
	Reference voltage -15%
	Reference voltage

SUPPLEMENTARY INFORMATION TO THE TEST PROCEDURES

Object of the test : To verify compliance with the provisions in paragraph 2(7)(ii) under conditions of voltage variations.

Test procedures in brief :

Precondition : None required.

Condition of the EUT : Normal power supplied and "on" for a time period equal to or greater than the warm-up time specified by the manufacturer. Power is to be "on" for the duration of the test.

Adjust the EUT as close to zero indication as practicable prior to the test. If it has an automatic zero-setting function then the instrument should be set to zero after applying each level of voltage.

The EUT shall display a recorded total not less than the minimum totalized load, *min.

Number of test cycles : At least one cycle.

Weighing test : The EUT shall be tested at no load and with one test load or simulated load between 50% and maximum capacity of the EUT.

Test sequence : Stabilize the power supply at the reference voltage within the defined limits and record.

(a) date and time;

(b) temperature;

(c) relative humidity;

(d) power supply voltage;

(e) test loads;

(f) indications (as applicable);

(g) errors;

(h) functional performance.

Repeat the test weighing for each of the voltages (nothing the need in certain cases to repeat the test weighing at both ends of the voltage range) and record the indications.

Maximum allowable variations :	All functions shall operate as designed. All errors shall be within the maximum permissible errors specified in Table 2.

(iv) *Battery power supply voltage variation (DC) [paragraph 2(7)(iii)]*

Test method :	Variation in DC power supply. Where the EUT continues to operate below the stated battery voltage, the following test shall be conducted using an equivalent variable DC power source.
Object of the test :	To verify compliance with the provisions in paragraph 2(7)(iii) under conditions of varying DC power supply. The requirements shall be met either by use of an equivalent variable DC power source or by allowing the battery voltage to fall by use.
Reference to standard :	No reference to international standards can be given at the present time.
Test procedures in brief :	The test consists of subjecting the EUT to DC power variations when the former is operating under normal atmospheric conditions with one test load or simulated load between 50% and maximum capacity of the EUT.
Test severity :	Supply voltage : lower limit, the voltage at which the EUT clearly ceases to function (or is automatically put out of service) +2% of this voltage.
Number of test cycles :	At least one cycle.
Conduct of the test :	
Precondition :	None required.
Test equipment :	Variable DC power source; Calibrated voltmeter; Load cell simulator, if applicable.
Condition of the EUT :	Normal power supplied and "on" for a time period equal to or greater than the warm-up time specified by the manufacturer. Adjust the EUT as close to zero indication as practicable prior to the test. If it has an automatic zero-setting function as part of the automatic weighing process, then the instrument should be set to zero after applying each level of voltage.
Test sequence :	Stabilize the power supply at nominal battery voltage ±2% and record the following data at no load and with one load or simulated load between 50% and maximum capacity of the EUT : (a) date and time; (b) temperature; (c) relative humidity; (d) power supply voltage; (e) test load; (f) indications (as applicable); (g) errors; (h) functional performance. Reduce the power supply to the EUT until the equipment clearly ceases to function and

	note the voltage. Switch the EUT "off" an increase the power supply voltage to nominal battery voltage ±2%. Switch the EUT "on" and reduce the power supply voltage to the above noted voltage (out of service voltage) +2% of the noted voltage. Record the data indicate above.
Maximum allowable variations :	All functions shall operated as designed. All errors shall be within the maximum permissible errors specified in Table 2.

(4) Disturbance tests [paragraph 4(1)(ii) and 4(3)(iv)]

SUMMARY OF TESTS

	Test	*Characteristic under test*	*Conditions applied*
(i)	Voltage dips and short interruptions	Disturbance	sf(*)
(ii)	Electrical fast transients/burst immunity	Disturbance	sf
(iii)	Electrostatic discharge	Disturbance	sf
(iv)	Electromagnetic Susceptibility	Disturbance	sf

(*) sf : value of the significant fault [see paragraph 4(2)(v) of Part I]

(i) *Voltage dips and short interruptions*

Short time power reduction (voltage dips and short interruptions) tests are carried out according to Table 7 given below :—

TABLE 7

Environmental phenomena	*Test specification*
Voltage dips and short interruptions	Interruption from reference voltage to zero voltage for one half cycle. Interruption from reference voltage to 50% of reference voltage for two half cycles These mains voltage interruptions shall be repeated ten times with a time interval of at least 10 seconds

SUPPLEMENTARY INFORMATION TO THE TEST PROCEDURES

Object of the test	To verify compliance with the provisions in paragraph 4(1)(ii) under conditions of short time mains voltage interruptions and reductions.

Test procedures in brief :

Precondition :	None required.
Condition of the EUT :	Normal power supplied and "on" for a time period equal to or greater than the warm-up time specified by the manufacturer. Adjust the EUT as close to zero indication as practicable prior to the test. The EUT shall not be readjusted at any time during the test except to reset if a significant fault has been indicated.
Number of test cycles :	At least one cycle.
Weighing test and test sequence :	Stabilize all factors at nominal reference conditions. Apply one load or simulated load between 50% and maximum capacity of the EUT and record : (a) date and time; (b) temperature; (c) relative humidity; (d) power supply voltage; (e) test load; (f) indications (as applicable); (g) errors;

474 GI/11-12b

(h) functional performance.

Interrupt the power supply to zero voltage for a period equal to one half cycle and conduct the test. During interruption observe the effect on the EUT an record as appropriate.

Reduce the power supply to 50% of nominal voltage for a period equal to two half cycles and conduct the test. During reductions observe the effect on the EUT and record, as appropriate.

Maximum allowable variations : The difference between the weight indication due to the disturbance and the indication without the disturbance and the indication without the disturbance either shall not exceed the values given in paragraph 4(2)(v) of part I, or the EUT shall detect and act upon a significant fault.

(ii) *Electrical fast transients/burst immunity*

Electrical fast transients/burst immunity tests are carried out for 2 minutes with a positive polarity and for 2 minutes with a negative polarity and according to Tables 8.1, 8.2 and 8.3 given below :—

TABLE 8.1

PORTS FOR SIGNAL LINES AND CONTROL LINES

Environmental phenomena	*Test specification*
Fast transient common mode	0.5 kV (peak) 5/50 ns T_1/T_h 5 kHz rep. frequency

Note **:** Applicable only to ports or interfacing with cables whose total length may exceed 3m according to the manufacturers' functional specification.

TABLE 8.2

INPUT AND OUTPUT DC POWER PORTS

Environmental phenomena	*Test specification*
Fast transient common mode	0.5 kV (peak) 5/50 ns T_1/T_h 5 kHz rep. frequency

Note **:** Not applicable to battery operated appliances that cannot be connected to the mains while in use.

TABLE 8.3

INPUT AND OUTPUT AC POWER PORTS

Environmental phenomena	*Test specification*
Fast transient common mode	0.5 kV (peak) 5/50 ns T_1/T_h 5 kHz rep. frequency

A coupling/decoupling network shall be applied for testing AC power ports.

SUPPLEMENTARY INFORMATION TO THE TEST PROCEDURES

Object of the test : To verify compliance with the provisions in paragraph 4(1)(ii) under conditions where fast transients are superimposed on the mains voltage.

Test procedures in brief :

Precondition : None required.

Condition of the EUT : Normal power supplied and "on" for a time period equal to or greater than the warm-up time specified by the manufacturer.

Adjust the EUT as close to zero indication as practicable prior to the test. The EUT shall not be readjusted at any time during the test except to reset if a significant fault has been indicated.

Stabilization : Before any test stabilize the EUT under constant environmental conditions.

Weighing test : Stabilize all factors at nominal reference conditions. Apply one

	load or simulated load between 50% and maximum capacity of the EUT and record the following with and without the transients :— (a) date and time; (b) temperature; (c) relative humidity; (d) test load; (e) indications (as applicable); (f) errors; (g) functional performance.
Maximum allowable variations :	The difference between the weight indication due to the disturbance and the indication without the disturbance either shall not exceed the value given in Paragraph 4(2)(v) of part I or the instrument shall detect and act upon a significant fault.

(iii) *Electrostatic discharge*

Electrostatic discharge tests are carried out as given in Table 9 given below :—

TABLE 9

Environmental phenomena	*Test specification*
Electrostatic discharge	8 kV air discharge 6 kV contact discharge

Note : The 6 kV contact discharge shall be applied to accessible conductive parts. Metallic contacts e.g. in battery compartments or in socket outlets are excluded from this requirement.

Contact discharge is the preferred test method. 20 discharges (10 with positive and 10 with negative polarity) shall be applied on each accessible metal part of the enclosure. The time interval between successive discharges shall be at least 10 seconds. In the case of a non-conductive enclosure, discharges shall be applied on the horizontal or vertical coupling planes. Air discharges shall be used where contact discharges cannot be applied. Tests with other (lower) voltages than those given in Table 9 are not required.

SUPPLEMENTARY INFORMATION TO THE TEST PROCEDURES

Object of the test :	To verify compliance with the provisions in paragraph 4(1)(ii) under conditions where electrostatic discharges are applied.
Test procedures in brief :	
Precondition :	None required.
Condition of the EUT :	Normal power supplied and "on" for a time period equal to or greater than the warm-up time specified by the manufacturer. Adjust the EUT as close to zero indication as practicable prior to the test. The EUT shall not be readjusted at any time during the test except to reset if a significant fault has been indicated.
Stabilization :	Before any test stabilize the EUT under constant environmental conditions.
Weighing test :	Stabilize all factors at nominal reference conditions. Apply one load or simulated load between 50% and maximum capacity of the EUT and record the following with and without electrostatic discharge : (a) date and time; (b) temperature; (c) relative humidity; (d) test load; (e) indications (as applicable); (f) errors; (g) functional performance.
Maximum allowable variations :	The difference between the weight indication due to the

disturbance and the indication without the disturbance either shall not exceed the value given in paragraph 4(2)(v) of Part I or the instrument shall detect and act upon a significant fault.

9. *Span stability test [paragraph 4(4)(iii)]*

SUMMARY OF TEST

Test Condition applied	*Characteristic under test*	
Span stability	Stability	1/2 absolute mpe (*)

(*) mpe : maximum permissible error on initial verification in paragraph 2(2)(ii).

Table 2.

Note : the maximum permissible error for the zero point shall also be taken into consideration.

Test method : Span stability.

Object of test : *To verify compliance* with the provisions in paragraph 4(4)(iii) after the EUT has been subjected to the performance tests.

Reference to standard : No reference to international standards can be given at the present time.

Test procedures in brief : The test consists of observing the variations of the error of the EUT or simulator under sufficiently constant ambient conditions (reasonable constant conditions in a normal laboratory environment) at various intervals : before, during, and after the EUT has been subjected to performance tests.

The performance tests shall include the temperature test and, if applicable, the damp heat test; an endurance test shall not be included. Other performance tests listed in this Annex may be performed.

The EUT shall be disconnected twice from the mains power supply (or battery supply where fitted) for at least eight hours during the period of the test. The number of disconnections may be increased if so specified by the manufacturer or at the discretion of the approval authority in the absence of any specification.

In the conduct of this test, the operating instructions for the instrument as supplied by the manufacturer shall be considered.

The EUT shall be stabilized at sufficiently constant ambient conditions after switch-on for at least five hours, and at least sixteen hours after the temperature and damp heat tests have been performed.

Test severities : Test duration : Twenty eight days or the time period necessary to conduct the performance tests, whichever is less.

Time (t) between tests (days) : $0.5 \leq t \leq 10$.

Test load : near maximum capacity (Max); the same test weights shall be used throughout the test.

Maximum allowable variations : The variation in the errors of indication shall not exceed half the absolute value of the

	maximum permissible error in paragraph 2(2)(ii) Table 2 for the test load applied on any of the n measurements.
Number of tests (n) :	At least eight except where the difference of the results indicates a trend more than half the allowable variation specified, the measurements shall be continued until the trend comes to rest or reverses itself, or until the error exceeds the maximum allowable variation.
Precondition :	None required.
Test equipment :	Verified mass standards or simulated load.
Condition of the EUT :	Normal power supplied and "on" for a time period equal to or greater than the warm-up time specified by the manufacturer.
Test sequence :	Stabilize all factors at nominal reference conditions. Adjust the EUT as close to zero as possible. Automatic zero-tracking shall be made inoperative and automatic built-in span adjustment device shall be made operative. Initial measurement Determine the span error using the following method :— 1. Determine the initial zero error (E_0) If necessary disable any automatic zero-setting or zero-tracking devices by placing a "zero weight" of for example 10 times the scale interval on the load receptor. Note the indication at zero (I_0). Either by use of an indicator with a suitable higher resolution scale interval or using the change point weight method specified in paragraph 4(2)(ii) of this Annex (noting the total addition change point weight $\bullet L_0$) determine and record the initial zero error (E_0). 2. Determine the error at near Max capacity (E_L) Carefully remove the change point weights (if used) and apply the test load (or simulated load) and note the indication (I_L). Either by use of an indicator with a suitable higher resolution scale interval or using the change point weight method specified in paragraph 4(2)(ii) of this Annex (nothing the total addition change point weight Δ L) determine and record the error at near Max capacity (E_L). Record : (a) date and time; (b) temperature; (c) barometric pressure; (d) relative humidity; (e) value of 0.1 d; (f) test load; (g) total of added change point weights at zero load $\bullet L_0$; (h) total of added change

474 GI/11—127

point weights at test load L;

(i) the following indications :

- indication at zero (I_0);
- indication of test load (I_L);

(j) calculate :

- initial zero error E_0;
- error at test load (E_L);

(k) change in location

and apply all necessary corrections resulting from variations of temperature, pressure, etc. between the various measurements.

Immediately repeat steps 1 and 2 four more times and determine and record the average value of the error for the five tests.

Subsequent measurements

After observing the time between measurements requirement repeat the test sequence 1 to 2 once recording the data above unless :

(a) either the result is outside the maximum allowable variation; or

(b) the range of the five readings of the initial measurement is more than 0.1 d, in which case continue four more times repeating steps 1 and 2 recording the data above and determine and record the average value of the error of the five tests.

The measurements shall continue until there are at least 8 measurements except where the difference of the results indicates a trend more than half the allowable variation specified, the measurements shall be continued until the trend comes to rest or reverses itself, or until the error exceeds the maximum allowable variation.

EIGHTH SCHEDULE

SPECIFICATIONS FOR MEASURING INSTRUMENTS

[See *Rule 13*]

General requirements

(a) A measuring instrument shall be of such material, design and construction as to ensure, under normal working conditions, the following requirements :—

(i) accuracy is maintained,

(ii) operating parts continue functioning satisfactorily, and

(iii) adjustment remains reasonably permanent.

(b) A measuring instrument shall not be stamped unless it is complete with all parts and attachments concerned with the operation of measurement and delivery.

(c) Where an instrument has interchangeable or reversible parts, their interchange ability or reversal shall not affect the accuracy of the instrument.

(d) Every measuring instrument of fixed type shall be so installed that the viewer can readily obtain a clear and unobstructed view of the indication of measurement and delivery.

(e) The design and construction of measuring instrument shall be such as would prevent, as far as possible tampering with the accuracy of the instrument either by inadvertent use or otherwise.

PART I

VOLUMETRIC CONTAINER FILLING MACHINES

1. Description

(a) A volumetric container filling machine shall consist of a basin or basins, the capacity of each of which shall depend on the

capacity of the containers, which is intended to be filled. The operation shall consist of first filling the machine to the required level and then emptying out the contents into the container or containers.

(b) The machine shall have any one or more of the following capacities :—

1, 2, 5, 10, 15, 20, 50, 100 and 200 litres.

2. General requirements

(a) The design of the filling machine shall be such that the measured quantity shall be entirely drained out on opening of the delivery valve.

(b) The basin shall be provided with adequate sight glasses, observation windows, cut-off valve or other means indicating clearly that the basin or basins are properly filled.

(c) The basin shall be provided with a suitable device such as a displacer to enable adjustment of the capacity of the basin.

(d) Every flexible hose for discharging liquid from the basin together with the rigid delivery pipe which empties itself on discharge, shall be so arranged as to provide for ready and adequate drainage of the liquid.

(e) The filling machine shall be rigidly fitted on a stand.

(f) The walls of the basin shall be strong enough as not to cause any appreciable deflection due to the pressure of the liquid.

3. Tests

(a) A volumetric container filling machine shall be tested under the actual working conditions with a suitable liquid preferably the one which the instrument is intended to deliver.

(b) Before checking a volumetric container filling machine, the inside of the basin or basins and the discharge hose and pipe shall be wetted by filling the machine and emptying.

(c) For testing volumetric container filling machines check measure of appropriate capacity shall be used.

(d) The check measure shall be tested, for accuracy, against a working standard capacity measure of appropriate capacity and accuracy.

(e) The procedure for testing the accuracy of volumetric container filling machines shall be as follows :—

(i) The machine shall be filled to the full capacity.

(ii) The contents of each container of the machine shall be measured with a check measure/measures and the quantity so measured will indicate whether the capacity is within or beyond the maximum permissible error.

(iii) If the capacity is beyond the maximum permissible error, the container shall be adjusted until the errors are brought within the permissible limits; and the test shall be repeated until the filling machines give two consecutive deliveries within the maximum permissible error.

4. Maximum permissible error

Capacity	*Error in excess only*
10 litres and above	0.1 per cent
below 10 litres	0.2 per cent

5. Sealing

The volumetric container filling machines shall be provided by the manufacturer with a plug/plugs or stud/studs of such soft metal to receive the stamp or seal of the verifying authority. Such plug/plugs or stud/studs shall be provided in a conspicuous part of the machine and shall be made in such a manner as to prevent its removal without obliterating the seal/seals. The adjusting device also shall be properly sealed so as to avoid any tampering of capacity.

PART II

BULK METERS

1. General

(a) This Part deals with the accuracy requirements for bulk meters used in petroleum trade.

(b) Bulk meters shall not have a capacity below 100 litres.

2. Definitions

(a) *Pressure drop*—The difference between the inlet and outlet pressures of the meter is the pressure required to force liquid through the meter and overcome its resistance to movement.

(b) *Hydraulic slip or slippage*—That quantity of liquid which passes through the meter without causing any registration.

(c) *Flow range*—That portion of the meter's total flow capacity in which it operates to meet the required degree of accuracy in measurement.

3. Types and construction

(a) Bulk meters used for measuring liquid petroleum products shall be positive displacement meters in which the liquid under a positive pressure head causes the measuring elements in the meter to rotate, reciprocate or otherwise move through and defined volumetric displacement before the liquid passes from the meter. This movement is interpreted through a train of gears on a register as a measure of liquid volume.

(b) Meters differ widely in construction, but in general they may be divided into the following two main classes :

(i) Capillary seal meter—Capillary seal meters which may either be of reciprocating, rotary or other types are sealed with a thin film of the liquid being measured and are usually characterized by a relatively low pressure-drop.

(ii) Packed or mechanical seal meter—'Packed or mechanical seal meters' which are always of the reciprocating piston type are sealed by a suitably designed piston ring or washer to prevent 'slip' or leakage. They have a higher pressure-drop than capillary seal meters.

(c) Capillary seal meters are generally preferable for installation where gravity discharge is essential. Both 'packed' and capillary seal meters are suitable for pressure discharge.

(d) Meters are usually constructed of aluminium, aluminium alloys, bronze, brass or gun metal and stainless steel or special steels for certain small components. Carbon bearings and carbon vanes are also used since they operate satisfactorily without lubrication.

(e) Meters are sometimes fitted with automatically or manually operated temperature compensating devices. These devices correct the expansion or contraction of the liquid being measured with change of temperature and directly indicate the volume which the liquid would occupy at a standard temperature. The devices are satisfactory when the liquid temperature remains substantially constant; but when marked fluctuations in temperature occur, they should be used for accurate measurement only when their response to temperature change is very rapid.

4. Meter Installation

The installation of the bulk meter has a direct bearing upon its operation and such characteristics as the rate of flow and accuracy may be seriously affected if it is not correctly installed. It is, therefore, essential that where possible the layout be based on the following :

(i) Meters shall be protected by a strainer or filter and an air eliminator fitted as close to the inlet as possible so as to remove all particles which are injurious to the meter and which might impair its accuracy. They shall not be at a lower level.

(ii) The pipe work shall be so arranged that the strainer, air separator and meter cannot be accidentally drained.

(iii) All pipe work and fittings shall be cleaned and flushed out to remove scale and foreign matter before installing the meter.

(iv) The meter shall be mounted securely on a horizontal base using rubber mounting pads to reduce shock and vibration where these are likely to occur.

(v) Inlet and outlet pipe work shall not exercise strain on the meter body. Acute bends, toes and elbows shall be avoided as far as

possible.

(vi) The layout shall be so designed as to facilitate removal of the meter without unnecessarily disturbing the pipe work and sufficient space shall be provided to allow for meter calibration, cleaning and small servicing requirements.

(vii) If pipe jointing compounds are used, these shall be applied to the male parts not to female. It is vital not to allow any compound to enter the meter.

(viii) The meter shall be located so that the register is clearly readable by the operator from the control point.

(ix) Flow control valves, when fitted, shall be installed adjacent to the outlet of the meter. If a valve is installed on the inlet side, it shall be located at a sufficient distance on the upstream side to ensure a uniform steady flow through the meter when the valve is throttled.

(x) Pulsating flow, such as that caused by piston pumps, shall be avoided, if this is not possible to achieve, a surge tank or alleviator should be installed upstream of the meter(s).

(xi) Meters shall not be installed on the function side of pumps.

5. Tests

(a) All meters shall be tested under conditions which duplicate normal operating conditions as closely as possible particularly in respect of rates of flow and the product involved.

(b) Before commencing checking of a meter, the meter shall be run for several minutes to ensure that all units are functioning smoothly.

(c) For testing of meters, a proving tank shall be used. The capacity of the proving tank shall be sufficient in size to contain at least one minute's flow through the meter at its normal operating rate when used for bulk loading. The proving tank shall be tested against the working standard capacity measure of appropriate capacity.

(d) The procedure for testing shall be as follows :—

(i) After all connections have been made fill the proving tank once with the full quantity in order to wet all surfaces, to fill the discharge hose and to ascertain that there are no leaks in the connection;

(ii) Empty the proving tank and close the outlet valve after it is completely drained;

(iii) Set the meter dial to zero reading;

(iv) Fill the proving tank through the meter to a point where the meter dial records the capacity of the proving tank. If the meter is fitted with an automatic presetting device, set this to deliver the capacity of the proving tank;

(v) Note the reading on the graduated gauge glass of the proving tank, which would show that the meter is, within or beyond the maximum permissible error;

(vi) If it is beyond the maximum permissible error, adjust the meter until the errors are brought within the permissible limits;

(vii) Repeat steps (ii), (iii), (iv) and (v) until the meter gives two consecutive deliveries within the maximum permissible error.

(viii) If the meter has been found to give accurate measure in the initial test itself, make at least one more test to check the accuracy recorded.

6. Maximum permissible error

(a) The errors shall not exceed ±0.1 per cent for any quantity discharged.

(b) The bulk meter shall be complete with all parts and attachments concerned with the operation of measurement and delivery.

7. Marking

(a) Every bulk meter shall be conspicuously, clearly and prominently marked with the following indications :—

474 GI/11-128

(i) registering capacity;

(ii) name or registered trade mark of the manufacturer;

(iii) identification number.

(b) The bulk meter shall be provided with a plate fastened in a prominent place to receive the markings mentioned in (a) above and to receive the stamp of the Legal Metrology Officer's seal.

8. Sealing

Every bulk meter shall be provided with a suitable sealing arrangement to receive the stamp or seal of the verification authority.

PART III.

WATER METERS (DOMESTIC TYPE)

1. General

This Part applies to water meters intended for metering potable cold water with threaded end connections and of nominal sizes upto and including 50 mm. The part applies to both wet dial and dry dial meters.

2. Terminology

(i) *Nominal pressure*

The internal pressure, expressed in MPa corresponding to the maximum permissible working pressure.

(ii) *Flow rate*

The volume of water passing through the water meter per unit of time; the volume being expressed in litre and the time in hours, minutes or seconds.

(iii) *Flow delivered*

The total volume of water which has passed through meter in a given time.

(iv) *Maximum flow rate, qmax*

The highest flow rate at which the meter can function over limited periods without damage and without exceeding the maximum permissible errors and the maximum permissible value for loss of pressures, expressed in kl/h.

(v) *Nominal flow rate, Q_n*

Half the maximum flow rate, Q_{max}, expressed in kl/h. At the nominal flow rate Q_n, the meter should be able to function in normal use, i.e. in continuous and intermittent operating conditions, without exceeding the maximum permissible error.

(vi) *Minimum flow rate, Q_{min}*

The lowest flow rate at which the meter is required to give indications within the prescribed maximum permissible error. It is determined in terms of Q_n.

(vii) *Flow rate range*

The range limited by the maximum and the minimum flow rates (Q_{max} and Q_{min}). The range is divided into two zones called upper and lower zones, separated by the transitional flow rate Q_t.

(viii) *Transitional flow rate, Q_t*

The flow rate which divides the upper and lower regions of the flow range and the rate at which the maximum permissible errors become discontinuous.

(ix) *Pressure loss*

The pressure loss caused due to the presence of the water meter in the pipe line.

(x) *Water Meter-Dry Dial*

Meter in which the counter mechanism is isolated from water flowing through the meter.

(xi) *Water Meter, Wet-Dial Type*

Meter in which the complete counter unit is in contact with water flowing through the meter.

3. Nominal Sizes

Water meters shall be of the following nominal sizes :

15 mm, 20 mm, 25 mm, 40 mm and 50 mm.

The nominal size of the water meter shall be denoted by the nominal bore of its end connections.

4. Classes of Water Meters

The water meters are classified as Class A and Class B based on the maximum verification scale interval and metrological characteristics.

5. Materials and Manufacture

(1) *General :*

Water meters and their parts, especially parts coming in continuous contact with water shall be made of materials resistant to corrosion and shall be non-toxic and non-tainting. Use of dissimilar metals in contact under water shall be avoided as far as possible in order to minimize electrolytic corrosion.

(2) *Construction :*

The meters shall be constructed in such a way as to—

(i) give long service and guarantee against any fraud or tampering; and

(ii) conform with the provisions of these rules.

(3) *Body :*

The body shall be free from all manufacturing and processing defects, such as blow-holes and spongy structure and shall not be repaired by plugging, welding or by the addition of materials. The internal shape of the body shall ensure smooth flow of water and easy dismantling.

(4) *Registration Box :*

The registration box of dry-dial water meters shall be provided with one or two escape holes for minimizing the accumulation of condensed water. In the case of magnetic driven type or where the registration box and cap are integral with the body, no escape hole shall be provided.

(5) *Cap :*

Where the cap and registration box are integral, the material for cap shall be the same as used for registration box. The cap shall be so designed and fixed to the registration box as to avoid entry of water and dirt. The transparent window which covers the dial shall be inserted from the inside into the cap. The protective lid shall be secured by a robust hinge or other suitable method of robust construction. Cap ring where applicable should be of the same material as of the cap.

(6) For dry type water meters, the transparent window covering the dial shall be provided with a wiper on the inner side for wiping off condensed water.

(7) *Connections :*

The meter casing shall be fitted in the pipe line by means of two cylindrical nipples or tailpieces with connecting nuts which shall be provided with each meter. The internal diameter of the nipple where it connects the pipeline shall be equal to that corresponding to the nominal size of the meter.

(8) *Strainers :*

Water meters shall be provided with strainers. Strainers shall be of a material which is not susceptible to electrolytic corrosion. They shall be of corrosion resistant materials. They shall be rigid, easy to remove and clean and shall be fitted on the inlet side of the water meter. It shall be possible to remove and clean the strainer in such a way as not to permit disturbing the registration box or tampering with it. The strainer shall have a total area of holes not less than twice the area of the nominal inlet bore of the pipe to which the meter is connected. However in the case of meters provided with internal strainer, involving opening of the registration box for cleaning, an additional external strainer shall be fitted on the inlet side satisfying the above requirements.

(9) *Impellers and pistons :*

Impeller and impeller shaft assembly shall rest on a self-lubricating, lubricating with low frictional resistance.

(10) Rotary or oscillating pistons in the case of semi-positive type meters shall be of non-absorbent material, such as vulcanite or ebonite. Pistons shall be accurately finished and shall operate freely.

(11) Impeller or Measuring Chamber :

The impeller or measuring chamber shall be of a corrosion resistant material and shall be rigid and shall not change its form as a result of internal stresses or with use.

(12) Gears and pinions :

Gears and pinions shall be so constructed properly and smoothly mesh with each other and shall be firmly fitted on their shafts.

(13) Bearings :

Impeller bearings shall be suitably ground and polished. The shape of the impeller bearing shall be such as to prevent the penetration of particles of sand and to preclude the deposit of anything in solution or suspension in water and to facilitate the washing way of such deposits by the water flow. The shafts of the gears shall revolve freely in their bearings. The length of the bearings shall ensure their effective operation.

(14) Counter :

The non-reversible counter shall be of the circular multi-pointer pattern with all pointers reading clockwise or straight reading cyclometer type or a combination of pointer and cyclometer. The rollers of the counters shall be made of specially suitable for the purpose and shall be self-lubricating. The pointers made of suitable materials shall be soldered to the spindle.

(15) Dial :

The dial shall be of vitreous enamel powder coated on copper or plastics ensuring indestructible marking and good legibility.

(16) Regulator :

Every meter shall be provided with a regulator. The regulator accessible from outside shall be operated by a key without dismantling the meter and not without breaking the seal. The internal regulating device shall not be accessible from outside.

(17) Location of Serial Number :

The serial number of the meter shall be clearly indicated on the screw cap or in any other suitable place.

(18) Frost Protection Device :

Meters liable to be damaged by frost when so ordered by the purchaser shall be protected with suitable frost protection device.

6. Indicating device

(1) Indicating device shall be able to record 9999 kl (minimum) for meter size of 15, 20, and 25 mm and 99999 kl (minimum) for size 40 and 50 mm and shall thereafter indicate zero.

(2) The indicator shall allow, by simple juxtaposition of its various constituent elements, a reliable, easy and unambiguous reading of the volume of water measured, expressed in litres. The volume is indicated by one of the following systems :—

(i) the position of one or more pointers or circular scales;

(ii) reading of a row of in-line consecutive digits in one or more apertures;

(iii) a combination of these two systems.

(3) The kilolitres and its multiples shall be indicted in black and sub-multiples of the kilolitres in red. This colour coding applies to the pointers on circulars scale type indicting devices and to the drum in in-line digit indicting devices. The actual or apparent height of the digits on the drums shall not be less than 4 mm.

(4) For digital indicators the visible displacement of all digits shall be upward in value. The advance of any given digital unit shall be completed while the digit of the immediately next lower value describes the last tenth of its travel.

(5) The drum showing the digits of lowest value may move continuously. The whole number of kilo-litres shall be clearly indicated.

(6) Indicators with pointer shall be non-reversible and rotate in a clockwise direction. The value in litres for each scale division shall be expressed as 10n, wherein n is a positive or

negative whole number or zero, thereby establishing a system of consecutive decades. Each scale shall be either—

(i) graduated in values expressed in litres, or

(ii) accompanied by a multiplying factor (x.001, x.01, x0.1, x1, x10, x1000, etc.)

(7) In both cases (dial and digital indicators)—

(i) the unit symbol 'KILO-LITRES' shall appear either on the dial or in the immediate vicinity of the digital indication;

(ii) fastest-moving visible graduated element, the control element, the scale interval of which is known as the "scale interval", shall move continuously.

(8) The length of scale interval shall be not less than 1 mm and not more than 5 mm. The scale shall consist—

(i) either of lines of equal thickness not exceeding one quarter of the distance between the axes of two consecutive lines and differing only in length, or

(ii) of contrasting bands of a constant width equal to the length of the scale division.

(9) The width of the pointer index tip shall not exceed one quarter of the distance between two scale divisions, and in no case shall it be greater than 0.5 mm.

(10) Value of Scale Division

(i) Value of scale interval for Class 'A' and Class 'B' meters shall be as given in Table 1.

TABLE 1

VALUE OF SCALE INTERVAL

Meter Size	*Maximum Value of Scale Interval in litre*	
	Class A	*Class B*
15	0.2	0.2
20	0.5	0.2
25	1.0	0.5
40	2.0	1.0
50	2.0	2.0

(ii) *Accelerating Device*

The use of an acceleration device for increasing the speed of the meter below Q_{min} is prohibited.

7. Technical characteristics

(1) Pressure tightness

A meter shall be able to withstand constantly without defects in its functioning, leakage, seepage through the walls or permanent deformation, the continuous water pressures of (i) 1.6 MPa for 15 minutes, and (ii) 2 MPa for 1 minute, when tested in accordance with the procedure described in Annexure A.

(2) Loss of pressure

Loss of pressure through the meter when determined in accordance with the procedure described in Annex. A shall not exceed 0.025 MPa at the nominal flow rate Qn and 0.1 MPa at the maximum flow rate, Q_{max}.

Note : Nominal flow rate Q_n shall be taken as per Table 2 and maximum flow rate Q_{max} as twice the nominal flow rate.

(3) Temperature suitability

This test shall be carried out in accordance with the procedure described in Annexure A. This test is to be carried out for Model approval only.

8. Metrological characteristics

(1) Metering accuracy

The maximum permissible error in the metering accuracy, when determining as per the procedure described in Annexure A shall be as under :—

(i) In the lower region of flow, Q_{min} (inclusive) to Q_t (exclusive) $\pm$ 5%

(ii) In the upper region of flow, Q_t (inclusive) to Q_{max} (inclusive) $\pm$ 2%

Note : Value of Q_{min}, Q_t and Q_{max} for the three classes of water meters are given in Table 2.

(2) Minimum starting flow

The minimum flow at which the meter starts registering shall be as given in Table

474 GI/11-129

TABLE 2

NOMINAL FLOW, MINIMUM STARTING FLOW RATE, TRANSITIONAL FLOW RATE AND MAXIMUM FLOW RATE VALUES

Meter Size	*Nominal Flow rate Qn kl/h*	*Minimum Starting Flow rate Qmin 1/h*		*Transitional Flow rate Qt in l/h for*		*Maximum Flow rate Qmax kl/h*
		Class A	*Class B*	*Class A*	*Class B*	
(1)	*(2)*	*(3)*	*(4)*	*(5)*	*(6)*	*(7)*
15	1.5	60	30	150	120	3
20	2.5	100	50	250	200	5
25	3.5	140	70	350	280	7
40	10	400	200	1000	800	20
50	15	600	300	1500	1200	30

2 for the two classes of water meters. The test shall be carried out in accordance with the procedure described in Annexure A.

(3) Tests during verification

(i) Loss of pressure

(ii) Metering accuracy

(4) Model approval tests

In addition to all tests mentioned for verification, the following additional tests shall be carried out :—

Constructional details, Pressure tightness, Life test (Accelerated Endurance test, Temperature suitability test) and temperature suitability test. It shall be carried out in accordance with the procedure described in the Annex. A.

(5) After the meter has undergone the life test, they shall again be subjected to metering accuracy test and pressure tightness test and the meter shall be deemed satisfactory only when their performance fulfils the requirements.

9. Marking

Each water meter shall be marked with the following information :—

9(i) Manufacturer's name or trademark,

9(ii) Nominal size of the meter,

9(iii) Direction of flow of water on both sides of the meter,

9(iv) Accuracy class,

9(v) Serial number,

9(vi) Model approval number, and

9(vii) Year of manufacture.

10. Sealing

Sealing holes shall be provided with a suitable sealing arrangement to receive the seal of the verification authority and the meter shall be sealed in such a manner as to render it impossible to obtain access to the measuring unit without breaking the seals. The sealing wire shall be rust-proof.

ANNEXURE 'A'

FLOW TESTS

1. Metering Accuracy Test

(1) After preliminary running and setting, allow the water to pass through the meter in such a way that flow rates corresponding to the values given in Table 2 for Qmax, Qt, Qmin and Qn are achieved. This may be accomplished by manipulating the inlet valve or outlet valve for finer adjustment. For each of the flow rate the reading on the meter(s) shall be compared with the volume collected in the measuring tank. The test shall be carried out at least at three intermediate rates, covering the above ranges.

(2) The error shall then be computed as under :—

$$\text{Percent error} = \frac{V_i - V_c}{Vc} \times 100$$

Where

V_i = Volume of water collected in the water tank, and

V_c = Volume of water indicated on individual meter.

Metering accuracy shall also be calculated and reported separately for the following discharges :—

(i) Q_{max},

(ii) Q_t, and

(iii) Q_{min}

Notes :

1. The metering accuracy test at Qn may be done if required by the purchaser.
2. Recording of volume of water in the meter at Qmin shall be deemed as meter complying with the 'minimum starting flow test'.

2. Loss of Pressure Test at Q_n and Q_{max}

This test may be carried out concurrently with the metering accuracy test at Q_n and Q_{max}.

The meter shall be tested for loss of pressure within the meter at nominal flow rate Q_n and maximum flow rate Q_{max}. The loss of pressure should not exceed 0.025 MPa and 0.1 MPa respectively at the above two stages. (For value of Q_n and Q_{max}).

The pressure loss within the meter may be measured with the help of manometer or differential pressure gauge or pressure gauges provided each at up-stream and down-stream.

While the meter(s) are being tested for accuracy at Q_n and Q_{max}, the readings between the up-stream and down-stream in the pressure gauges P_1 and P_2 or manometers shall be taken for the purpose of computing the value of loss of pressure within the meter. In case one meter is being tested the difference between the pressure gauge reading of P1 and P2 or the differential pressure shown by the differential pressure gauge/manometer shall be the loss of pressure within the meter.

In case loss of pressure is being measured for more than one meter at a time, the difference between the readings of P_1 and P_2 be divided by number of meters to obtain the loss of pressure in an individual meter. This, however, shall contain the line loss(es) contributed by the connecting pieces between the two meters. For an accurate approach line loss(es) may be measured by joining the up and down-stream spacers/pipe faces together in the absence of the meter/s (carefully avoiding protrusion into the pipe bore or misalignment of the two faces), and measuring the pipe pressure loss/line losses of the measuring section for each test at appropriate flow rates.

While computing loss of pressure, across 1 or N number of meters tested in series, the loss registered by spacers/pipes in line losses be subtracted from the total value of pressure loss registered by difference between the readings of pressure gauge at up-stream and down-stream to obtain the value of loss of pressure across 1 or N number of meters.

3. Pressure Tightness Test

The meter(s) shall be subjected to hydrostatic continuous water pressure of—

(1) 1.6 MPa for 15 minutes, and

(2) 2.0 MPa for 1 minute.

Note : Only when the meter has qualified for (1) above, it should be subjected for the test for (2) above.

After mounting the meter(s) on the test bench, the pump or the pumping medium should be switched on to let the water flow through the meter(s) and the air is purged out of the system. The down-stream valve should then be closed. The pressure shall then start building up and should be maintained at the above value for the given time. The meter should withstand constantly the above pressure without defects in its function, leakage, seepage or permanent deformation.

Note : The meter(s) may be tested individually or in series.

4. Test equipment for Temperature Suitability Test

For carrying out the temperature suitability test, a container of appropriate dimensions fitted with heating elements, and temperature control device to maintain temperature at 45°C ± 1°C shall be used.

5. Temperature Suitability Test

As a general rule, at least one meter shall be put to temperature suitability test every three months and records maintained. The meter for test may be selected at random.

The meter which has qualified the technical and metrological characteristics, shall be taken and placed in the test equipment meant for temperature suitability test maintained at 45°C ± 1°C. It should be kept there for 10 hours. While the meter is immersed in water dust cap or device stopping entry of water inside wet chamber of the meter be removed.

After 10 hours of continuous immersion at 45°C ± 1°C the meter shall be taken out and kept for some time in the open to acclimatize it at the ambient temperature. It shall then be rested again for flow test and pressure tightness test. They shall be deemed satisfactory if their performance after the temperature suitability test satisfies the above requirements.

Note : In case any material/design changes are carried out, this test shall be performed and checked for satisfactory performance before introducing the change(s) on mass scale production.

6. Test equipment for Life Test

The test equipment shall consist of the following :—

(a) A centrifugal pump along with regulating valves capable of delivering water at the rate of Q_n through two water meters in series,

(b) A suitable horizontal test bench, and

(c) A pressure gauge of appropriate range.

7. Life Test (Accelerated Endurance Test)

Two unopened meters in each size and class, selected at random shall be subjected to the life test every six months, in accordance with the requirements specified in Table.

Note : Meter(s) may be tested individually or in series.

TABLE 1

LIFE TEST REQUIREMENTS

Nominal Flow Rate	*Test Flow Rate*	*Type of Test*	*No. of Interruptions*	*Duration of Pauses*	*Period of Operation at Test*	*Duration of Start up and Run Down*
Q_n Kl/h				s		s
(1)	(2)	(3)	(4)	(5)	(6)	(7)
≤ 10	Q_n	Dis-continuous	100 000	15	15 s	$0.15(Q_n)$* with a minimum of 1 s
	$2Q_n$	Continuous	-	-	100 h	-
>10	Q_n	Continuous	-	-	800 h	-
	$2\ Q_n$	Continuous	-	-	200h	-

* Qn is the number equal to the value of Qn expressed in kl/h.

After the meters having undergone the life test, they shall again be subjected to flow tests and pressure tightness test. They shall be deemed satisfactory if their performance after the life test satisfies the above requirements.

One of the meter which has undergone the life test (preferably the one that has shown greater deterioration in its performance under the flow test) shall be dismantled completely and examined with a view to ensuring that there is no undue wear or distortion. Particular attention shall be paid during examination to the wear of the actuating unit comprising vane wheel or piston, the impeller and measuring chamber, bearings, gears and pistons, pivots and the gland packing.

PART IV

MEASURING SYSTEM FOR LIQUIDS OTHER THAN WATER

PART-1

TERMINOLOGY

1. Measuring system and its constituents

(1) Meter for volumes of liquids

An instrument intended to measure continuously, memorize and display the volume of liquid passing through the measurement transducer at metering conditions.

Note: A meter includes at least a measurement transducer, a calculator (including adjustment or correction devices if present) and an indicating device.

(2) Measurement transducer

A part of the meter which transforms the flow or the volume of the liquid to be measured into signals which are passed to the calculator. It may be autonomous or use an external power source.

Note : For the purposes of this specification, the measurement transducer includes the flow or volume sensor.

(3) Calculator

A part of the meter that receives the output signals from the transducer(s) and, possibly, from associated measuring instruments, transforms them and, if appropriate, stores in memory the results until they are used. In addition, the calculator may be capable of communicating both ways with peripheral equipment.

(4) Indicating device

A part of the meter which displays continuously the measurement results.

Note : A printing device which provides an indication at the end of the measurement is not an indicating device.

(5) Ancillary device

A device intended to perform a particular function, directly involved in elaborating, transmitting or displaying measurement results.

Main ancillary devices are:—

(i) zero setting device;

(ii) repeating indicating device;

(iii) printing device;

(iv) memory device;

(v) price indicating device;

(vi) totalizing indicating device;

(vii) conversion device;

(viii) pre-setting device; and

(ix) self-service device.

(6) Additional device

A part or a device, other than an ancillary device, required to ensure correct measurement or intended to facilitate the measuring operations, or which could in any way affect the measurement.

Main additional devices are:—

(i) gas elimination device;

(ii) gas indicator;

(iii) sight glass;

(iv) filter, pump;

(v) device used for the transfer point;

(vi) anti-swirl device;

(vii) branches or bypasses; and

(viii) valves, hoses.

(7) Measuring system

A system which comprises the meter itself and all the ancillary devices and additional devices.

(8) Pre-setting device

A device which permits the selection of the quantity to be measured and which automatically stops the flow of the liquid at the end of the measurement of the selected quantity.

***Note*:** The pre-set quantity may be the volume, the mass or the related price to pay.

(9) Adjustment device

A device incorporated in the meter, that only allows shifting of the error curve generally parallel to itself, with a view to bringing errors within the maximum permissible errors.

(10) Associated measuring instruments

Instruments connected to the calculator, the correction device or the conversion device, for measuring certain quantities which are characteristics of the liquid, with a view to making a correction or a conversion or both.

(11) Correction device

(i) A device connected to or incorporated in the meter for automatically correcting the volume at metering conditions, by taking into account the flowrate or the characteristics of the liquid to be measured (viscosity, temperature and pressure) and the pre-established calibration curves or both.

(ii) The characteristics of the liquid may either be measured using associated measuring instruments, or stored in a memory in the instrument.

(12) Conversion device

(i) A device which automatically converts the volume measured at metering conditions into a volume at base conditions, or into a mass, by taking account of the characteristics of the liquid (temperature, pressure, density, relative density.....) measured using associated measuring instruments, or stored in a memory.

(ii) The quotient of the volume at base conditions, or of the mass, to the volume at metering conditions is referred to as "conversion factor".

(13) Metering conditions

The conditions of the liquid of which the volume is to be measured, at the point of measurement (example: temperature and pressure of the measured liquid).

(14) Base conditions

The specified conditions to which the measured volume of liquid is converted (example: base temperature and base pressure).

Notes (i) Metering and base conditions (which refer only to the volume of liquid to be measured or indicated) should not be confused with the "rated operating conditions" and "reference conditions" which apply to influence quantities.

(ii) The values chosen as base conditions should preferably be 15°C or 20°C, and 101 325 Pa.

474 GI/11—130

(15) Transfer point

A point at which the liquid is defined as being delivered or received.

(16) Gas separator

A device used for continuously separating, and removing, any air or gases contained in the liquid.

Note : In general, devices defined from paragraphs 1(16) to 1(19) are called gas elimination devices.

(17) Gas extractor

A device used to extract air or gases accumulated in the supply line of the meter in the form of pockets that are no more than slightly mixed with the liquid.

(18) Special gas extractor

A device which, like the gas separator but under less stringent operating conditions, continuously separates any air or gases contained in the liquid, and which automatically stops the flow of liquid if there is a risk of air or gases, accumulated in the form of pockets no more than slightly mixed with the liquid, entering the meter.

(19) Condenser tank

In pressurized liquefied gas measuring systems, a closed tank used to collect the gases contained in the liquid to be measured and to condense them before measuring.

(20) Gas indicator

A device allowing easy detection of any air or gas bubbles which may be present in the liquid flow.

(21) Sight glass

A device for checking, before start-up and after shut-down, that all or part of the measuring system is filled completely with liquid.

2. Specific types of measuring systems

(1) Fuel dispenser

A measuring system intended for the refuelling of motor vehicles, small boats and small aircraft.

(2) Measuring system on a pipeline

A measuring system which in principle is installed on a fixed pipeline connecting two or more fixed tanks.

Note : This pipeline is characterized by a flowrate of the liquid to be measured which, in general, either does not change or changes little during a prolonged period.

(3) Aircraft refuelling tanker measuring system

A tanker mounted measuring system intended for refuelling aircraft, supplied from a tank mounted on the vehicle.

(4) Aircraft hydrant measuring system

A mobile measuring system intended for refuelling aircraft, supplied from hydrant pits.

(5) Blend dispenser

A fuel dispenser providing mixtures of various grades of gasoline (multigrade-dispenser) or mixtures of gasoline and lubricating oil (gasoline-oil-dispenser) through a single nozzle.

(6) Self-service arrangement

An arrangement that allows the customer to use a measuring system for the purpose of obtaining liquid for his own purchase.

(7) Self-service device

A specific device that is part of a self-service arrangement and which allows one or more measuring systems to perform in this self-service arrangement.

Note : The self-service device includes all the elements and constituents that are mandatory so that a measuring system performs in a self-service arrangement.

(8) Attended service mode

An operating mode of a self-service arrangement in which the supplier is present and controls the authorization for the delivery.

Notes : (i) In attended service mode, the settlement of the transaction takes place before the customer leaves the site of the delivery.

(ii) A transaction is settled when the parties interested in the transaction have made their agreement known (explicitly or implicitly) as regards the amount of the transaction. This may be a payment, signing a credit card voucher, signing a delivery order, etc.

(iii) The parties interested in a transaction may be the parties

themselves or their representatives (for example: the employee in a filling station, the driver of a truck).

(iv) In attended service mode the measurement operation ends at the moment settlement of the transaction takes place.

(9) Unattended service mode

An operating mode of a self-service arrangement in which the self-service arrangement controls the authorization for the delivery, based on an action of the customer.

Note : In unattended service mode, the end of the measurement operation is the end of the registration (printing or memorizing) of information concerning the measurement operation.

(10) Pre-payment

A type of payment in attended or unattended service mode requiring payment for a quantity of liquid before the delivery commences.

(11) Attended post-payment (or post-payment)

A type of payment in attended service mode requiring payment for the delivered quantity after the delivery but before the customer leaves the site of the delivery.

(12) Unattended post-payment (or delayed payment)

A type of payment in unattended service mode in which payment for the delivered quantity is required after the delivery, but in which the transaction is not settled when the customer leaves the site, following an implicit agreement with the supplier.

(13) Authorization of a measuring system

An operation that brings the measuring system into a condition suitable for the commencement of the delivery.

(14) Direct selling to the public

A transaction (selling or buying) of quantities of liquids whose settlement is associated with indications provided by a measuring system, any of the parties having access to the place of measurement and one of them being a consumer.

Notes : (i) The consumer can be any person. Generally the consumer is the buyer but he can also be the seller.

(ii) Main measuring systems used for direct selling to the public are :

- fuel dispensers,
- measuring systems on road tankers for the transport and delivery of domestic fuel oil.

3. Metrological characteristics

(1) Primary indication

An indication (displayed, printed or memorized) which is subject to legal metrology control.

Note : Indications other than primary indications are commonly referred to as secondary indications.

(2) Absolute error of measurement

The result of a measurement minus the (conventional) true value of the measurand.

(3) Relative error

The absolute error of measurement divided by the (conventional) true value of the measurand.

(4) Maximum permissible errors

The extreme values permitted by the specification for an error.

Notes : (i) Maximum permissible errors are stated as relative errors or absolute errors.

(ii) Where the comparison of a volume (for instance: difference between a result obtained at some specified conditions and a result obtained at reference conditions) with maximum permissible error is involved then, it is obvious that it is the absolute maximum permissible error, associated with the relative maximum permissible error, which applies.

(5) Minimum measured quantity of a measuring system

The smallest volume of liquid for which the measurement is metrologically acceptable for that system.

(6) Minimum specified volume deviation

The absolute value of the maximum permissible error for the minimum measured quantity of a measuring system.

(7) Minimum specified price deviation

The price to pay corresponding to the minimum specified volume deviation.

(8) Repeatability error

For the purposes of this Recommendation, the difference between the largest and the smallest results of successive measurements of the same quantity carried out under the same conditions.

(9) Intrinsic error

The error of a measuring system used under reference conditions.

(10) Initial intrinsic error

The intrinsic error of a measuring system as determined prior to all performance tests.

(11) Fault

The difference between the error of indication and the intrinsic error of a measuring system.

(12) Significant fault

A fault the magnitude of which is greater than the larger of these two values:—

(i) one-fifth of the magnitude of the maximum permissible error for the measured volume;

(ii) the minimum specified volume deviation.

The following are not considered to be significant faults, namely:—

(i) faults arising from simultaneous and mutually independent causes in the measuring instrument itself or in its checking facilities;

(ii) transitory faults being momentary variations in the indication, which cannot be interpreted, memorized or transmitted as a measurement result; and

(iii) faults implying the impossibility of performing any measurement.

(13) Durability

The capability of the measuring system to keep its performance characteristics over a period of use.

(14) Interruptible or non-interruptible measuring system

A measuring system is considered as interruptible or non-interruptible respectively when the liquid flow can or, as the case may be, cannot be stopped easily and rapidly.

(15) Cyclic volume

The volume of liquid corresponding to the working cycle of the measurement transducer, i.e. the sequence of movements at the end of which all the internal moving parts of this transducer return, for the first time, to their initial positions.

(16) Periodic variation

The maximum difference, during one working cycle, between the volume produced by the displacement of the measuring parts and the corresponding volume as shown by the indicating device, the latter being connected without play or slip to the measuring device and in such a way that it indicates at the end of the cycle, and for this cycle, a volume equal to the cyclic volume; this variation may be reduced in some cases by the incorporation of a suitable correction device.

Note : The effect of the correction device is included when the periodic variation is determined.

(17) First element of an indicating device

Element which, in an indicating device comprising several elements, carries the graduated scale with the smallest scale interval.

4. Test conditions

(1) Influence quantity

A quantity which is not the subject of the measurement but which influences the value of the measurand or the indication of the measuring system.

(2) Influence factor

An influence quantity having a value within the rated operating conditions of the measuring system, as specified in this specification.

(3) Disturbance

An influence quantity having a value within the limits specified but outside the specified rated operating conditions of the measuring system.

Note : An influence quantity is a disturbance if for that influence quantity the rated operating conditions are not specified.

(4) Rated operating conditions

Conditions of use, giving the range of values of influence quantities for which the

metrological characteristics are intended to be within the maximum permissible errors.

(5) Reference conditions

A set of specified values of influence factors fixed to ensure valid inter-comparison of results of measurements.

(6) Performance test

A test intended to verify whether the measuring system under test (Equipment Under Test) is capable of accomplishing its intended functions.

(7) Endurance test

A test intended to verify whether the meter or the measuring system is able to maintain its performance characteristics over a period of use.

(8) Uncertainty of the determination of an error

An estimate characterizing the range of values within which the true value of an error lies, including components due to the standard and its use, and components due to the verified or calibrated instrument itself.

Note : Components due to a verified or calibrated meter are notably linked to the resolution of its indicating device and to the periodic variation.

5. Electronic or electrical equipment

(1) Electronic device

A device employing electronic sub-assemblies and performing a specific function. Electronic devices are usually manufactured as separate units and are capable of being tested independently.

Note : Electronic devices, as defined above, may be complete measuring systems or part of measuring systems, in particular such as those mentioned in paragraph 1(1) to 1(5).

(2) Electronic sub-assembly

A part of an electronic device, employing electronic components and having a recognizable function of its own.

(3) Electronic component

The smallest physical entity which uses electron or hole conduction in semi-conductors, gases, or in a vacuum.

(4) Checking facility

A facility which is incorporated in a measuring system and which enables significant faults to be detected and acted upon.

Note : The checking of a transmission device aims at verifying that all the information which is transmitted (and only that information) is fully received by the receiving equipment.

(5) Automatic checking facility

A checking facility operating without the intervention of an operator.

(6) Permanent automatic checking facility (type P)

An automatic checking facility operating during the entire measurement operation.

(7) Intermittent automatic checking facility (type-I)

An automatic checking facility operating at least once, either at the beginning or at the end of each measurement operation.

(8) Non-automatic checking facility (type N)

A checking facility which requires the intervention of an operator.

(9) Power supply device

A device which provides the electronic devices with the required electrical energy, using one or several sources of a.c. or d.c.

PART-2

MEASURING SYSTEM FOR LIQUIDS OTHER THAN WATER

1. Field of application

(1) Scope

This Specification provides the metrological and technical requirements applicable to dynamic measuring systems for quantities of liquids other than water subject to legal metrology controls. It also provides requirements for the approval of parts of the measuring systems (meter, etc.).

In principle, this Specification applies to all measuring systems fitted with a meter as defined under paragraph 1(1) of Part 1-Terminology (continuous measurement), whatever be the measuring principle of the meters or their application, except—

(i) drum meters for alcohol;

(ii) measuring systems for cryogenic liquids;

(iii) direct mass measuring systems,

the provisions of paragraph 4 shall

apply to electronic measuring systems for alcohol and for cryogenic liquids. This Specification also applies to systems in which volume measurements are converted to mass indication.

Moreover, specific provisions could be developed for measuring systems equipped with e.g. ultrasonic or vortex meters. It will then be appropriate to decide whether such meters should be included in the scope of this Specification.

This Specification is not intended to prevent the development of new technologies.

(2) Liquids to be measured

Measuring systems that are covered by this Specification may be used for the following liquids, namely :—

(i) *liquid petroleum and related products* : crude oil, liquid hydrocarbons, liquefied petroleum gas (LPG), liquid fuel, lubricants, industrial oils, etc.;

(ii) *liquid food* : dairy products (milk, cream, etc.), beer and brewer's worth, wine and musts (cider, etc.), alcoholic beverages (liquor, whisky, etc.) non-alcoholic carbonated and not carbonated beverages, juices and concentrates, vegetable oils (Soya-bean-oil, palm-oil, etc.);

(iii) *alcohol* : pure ethanol (ethyl alcohol) and mixtures of only ethanol and water (except drum meters for alcohol) ;

(iv) *chemical products in liquid state* : HCl, H_2SO_4, ammonia water etc; and

(v) *other liquids* : all other liquids except cold potable water and hot water; examples: distilled water and deionised water, liquids used for calibration of tanks.

2. General requirements

(1) Constituents of a measuring system

A meter itself is not a measuring system. The smallest possible measuring system includes—

(i) a meter,

(ii) a transfer point,

(iii) a hydraulic circuit with particular characteristics which must be taken into account,

(iv) a gas elimination device,

(v) a filter device,

(vi) a pumping device,

(vii) correction devices related to temperature, viscosity, etc.

The measuring system may be provided with other ancillary and additional devices.

If several meters are intended for a single measuring operation, the meters are considered to form a single measuring system.

If several meters intended for separate measuring operations have common elements (calculator, filter, gas elimination device, conversion devices, etc.) each meter is considered to form, with the common elements, a measuring system.

(2) Ancillary devices

(i) Ancillary devices may be a part of the calculator or of the meter, or may be peripheral equipment, connected through an interface to the calculator.

(ii) In addition these devices shall bear a legend which is clearly visible to the user to indicate that they are not controlled when they display a measurement result visible to the user. Such a legend will be present on each print out likely to be made available to the consumer.

(3) Field of operation

(i) The field of operation of a measuring system is determined by the following characteristics, namely :—

(a) minimum measured quantity,

(b) measuring range limited by the minimum flowrate, Q_{min}, and the maximum flowrate, Q_{max},

(c) maximum pressure of the liquid, P_{max},

(d) minimum pressure of the liquid P_{min},

(e) nature of the liquid(s) to be measured and the limits of kinematic or dynamic viscosity when an indication of the nature of the liquids alone is not sufficient to characterize their viscosity,

(f) maximum temperature of the liquid, T_{max},

(g) minimum temperature of the liquid, T_{min}, and

(h) environmental class.

(ii) The minimum measured quantity of a measuring system shall have the form 1×10^n, 2×10^n or 5×10^n authorized units of volume, where n is a positive or negative whole number, or zero.

The minimum measured quantity shall satisfy the conditions of use of the measuring system; except in exceptional cases, the measuring system shall not be used for measuring quantities less than this minimum measured quantity.

The minimum measured quantity of a measuring system shall be not less than the largest minimum measured quantity of any one of its constituent elements (meter(s), gas extractor(s), special gas extractor(s), etc.). However, for gas elimination devices this provision does not need to be fulfilled if it is demonstrated (including tests) that it is not necessary.

(iii) The measuring range shall satisfy the conditions of use of the measuring system; the latter shall be designed so that the flowrate is between the minimum flowrate and the maximum flowrate, except at the beginning and at the end of the measurement or during interruptions.

The measuring range of a measuring system shall be within the measuring range of each of its elements.

Except in the case of specific provisions of certain types of measuring systems, the maximum flowrate of the measuring system shall normally be equal to at least four times the minimum flowrate of the meter or the sum of the minimum flowrates of the meters with which it is fitted. In some particular cases the ratio may be two.

(iv) A measuring system shall exclusively be used for measuring liquids having characteristics within its field of operation, as specified in the pattern approval certificate. The field of operation of a measuring system shall be within the fields of measurement of each of its constituent elements (metres, gas elimination devices).

When two or more meters are mounted in parallel in the same measuring system, the limiting flowrates (Q_{max}, Q_{min}) of the various metres are taken into consideration, especially the sum of the limiting flowrates, to verify if the measuring system meets the provision above.

(4) Accuracy classes

Taking into consideration their field of application, measuring systems are classified into four accuracy classes according to Table 1.

TABLE 1

Class	*Field of application*
0.3	Measuring systems on pipeline [see paragraph 5.(6)]
	All measuring systems if not differently stated elsewhere in this table; in particular:
	• fuel dispensers for motor vehicles (other than LPG dispensers) [see paragraph 5.(1) and 5.(9)]
0.5	• measuring systems on road tankers for liquids of low viscosity [see paragraph 5.(2)]
	• measuring systems for the unloading of ships' tanks and rail and road tankers [see paragraph 5.(3)]
	• measuring systems for milk [see paragraph 5.(5)]
	• measuring systems for loading ships (see paragraph 5.(6))
	• measuring systems for refuelling aircraft [see paragraph 5.(8)].
1.0	Measuring systems (other than LPG dispensers) for liquefied gases under pressure measured at a temperature equal to or above - 10°C [see paragraph 5.(4)]

- LPG dispensers for motor vehicles [see paragraph 5.(7)]
- Measuring systems normally in class 0.3 or 0.5 but used for liquids:
- whose temperature is less than - 10°C or greater than 50°C, or
- whose dynamic viscosity is higher than 1000 MPa.s, or
- whose maximum volumetric flowrate is not higher than 20 L/h

1.5 Measuring systems for liquefied carbon dioxide [Paragraph 5(4)(x)]

- Measuring systems (other than LPG dispenser) for liquefied gases under pressure measured at a temperature below - 10°C [Paragraph 5(4)]

(5) Maximum permissible errors

(i) For volumes not smaller than two litres, and without prejudice to paragraph 2(5)(iii) the maximum permissible relative errors, positive or negative, on volume indications are specified in Table 2.

TABLE 2

Accuracy classes

	0.3	0.5	1.0	1.5
A	0.3%	0.5%	1.0%	1.5%
B	0.2%	0.3%	0.6%	1.0%

(ii) For volumes smaller than two litres, and without prejudice to paragraph 2.(5)(iii), the maximum permissible errors, positive or negative, on volume indications are specified in Table 3.

TABLE 3

Measured quantity	*Maximum permissible errors*
From 1 to 2 L	Value fixed in Table 2, applied to 2 L
From 0.4 to 1 L	Twice the value fixed in Table 2
0.2 to 0.4 L	twice the value fixed in Table 2, applied to 0.4 L
From 0.1 to 0.2 L	quadruple the value fixed in Table 2
Less than 0.1 L	quadruple the value fixed in Table 2, applied to 0.1 L

(iii) However, whatever the measured quantity may be, the magnitude of the maximum permissible error is given by the greater of the following two values:

(a) absolute value of the maximum permissible error given in Table 2 or Table 3,

(b) minimum specified volume deviation.

For minimum measured quantities greater than or equal to two litres, the minimum specified volume deviation (E_{min}) is given by the formula:

$$E_{min} = (2\ V_{min}) \times (A/100)$$

where

V_{min} is the minimum measured quantity,

A is the numerical value specified in line A of Table 2 for the relevant accuracy class.

For minimum measured quantities less than two litres, the minimum specified volume deviation is twice the value specified in Table 3, and related to line A of Table 2.

Note : The minimum specified volume deviation is an absolute maximum permissible error.

(6) Conditions for applying maximum permissible errors

Provisions in this sub-clause apply to volume indications at metering conditions [see Paragraph 2(7) for converted indications].

(i) Maximum permissible errors in line A of Table 2 apply to complete measuring systems, for all liquids, all temperatures and all pressures of the liquids, and all flowrates for which the system is intended to be, or has been approved, without any adjustment between the various tests, for:

(a) pattern approval,

(b) initial verification in one stage or the second stage of a two-stage initial verification,

(c) subsequent verifications.

(ii) *Explanation* : An adjustment is allowed for each liquid, but in this case the pattern approval certificate provides information on

the capability of the meter to measure all the liquids without particular precautions. For example, the meter may be allowed only for measuring one liquid in normal use, or an automatic device that provides an adaptation to each liquid may be necessary.

(iii) When stated in the pattern approval certificate, a one-stage initial verification or the second stage of a two-stage initial verification of a measuring system intended to measure two or more liquids may be carried out with one liquid only or with a liquid different from the intended liquids. In this case and if necessary, the pattern approval certificate provides a smaller range or a shift for maximum permissible errors, so that Paragraph 2(6)(i) is fulfilled by the measuring system for all intended liquids.

When stated in the pattern approval certificate, the initial verification of a meter of a measuring system intended to measure two or more liquids may be carried out with one liquid only or with a liquid different from the intended liquids. In this case and if necessary, the pattern approval certificate provides a smaller range or a shift for maximum permissible errors, so that Paragraph 2(6)(ii) is fulfilled by the meter for all intended liquids.

The above considerations may be extended to the case of a measuring system or a meter intended to measure only one liquid but verified with another liquid.

(7) Provisions for converted indications

(i) Maximum permissible errors on conversion devices

When a conversion device for converting into a volume at base conditions or into a mass (including all its components and associated measuring instruments) is verified separately, maximum permissible errors on converted indications due to the conversion device, positive or negative, are equal to ± (A - B), A and B being the values specified in Table 2. However, the magnitude of the maximum permissible error shall not be less than the greater of the two following values:—

(a) one-half scale interval of the indicating device for converted indications,

(b) half of the value corresponding to the minimum specified volume deviation.

(ii) Accuracy of associated measuring instruments

When verified separately, associated measuring instruments shall exhibit an accuracy at least as good as the values in Table 4.

These values apply to the indications of associated measuring instruments taken into account for the calculation of the converted quantity (they include errors mentioned in Paragraph 2(7)(iii).

TABLE 4

Maximum permissible errors on measuring	*Accuracy classes of the measuring system* 0.3	0.5	1.0	1.5
Temperature	±0.3°C	±0.5°C	±0.5°C	±0.5°C
Pressure	less than 1 MPa : ± 50 kPa between 1 and 4 MPa : ± 5% more than 4MPa: ± 200 kPa			
Density	± 1 kg/m^3	± 1 kg/m^3	±2 kg/m^3	±2 kg/m^3

Density

(iii) Accuracy for calculation of characteristic quantities of the liquid

When the calculating function of a conversion device is verified separately, the maximum permissible error for the calculation of each characteristic quantity of the liquid, positive or negative, is equal to two-fifths of the value fixed in paragraph 2(7)(ii). However, the magnitude of the maximum permissible error shall not be less than one-half scale interval of the indicating device for converted indications.

4746 GI/11—132

(iv) Direct verification of a converted mass indication

When a conversion device is only associated with (or included in) a meter and when the converted mass indication is verified directly by comparison to mass standards (e.g. using a weighing machine) the maximum permissible errors (MPE) on the converted indication, positive or negative, are given by the formula:

$$MPE = \pm [B^2 + (A - B)^2]^{1/2}$$

where A and B are the values specified in Table 2.

When a conversion device is included in a measuring system, maximum permissible errors of line A of Table 2 apply to the converted mass indication. However, in any case, the magnitude of maximum permissible errors shall not be less than the mass corresponding to the minimum specified volume deviation.

(v) Direct verification of a converted volume indication

Standards delivering directly the true value of converted volume indications are not available for general uses. Such standards only exist for a given liquid or for very similar liquids. When such standards are available, provisions in paragraph 2(7)(iv) can be applied by analogy.

(8) Maximum permissible errors on calculators

Maximum permissible errors on quantities of liquid indications applicable to calculators, positive or negative, when they are tested separately, are equal to one-tenth of the maximum permissible error defined in line A of Table 2. However, the magnitude of the maximum permissible error shall not be less than one-half scale interval of the measuring system in which the calculator is intended to be included.

(9) Indications

(i) The volume indication shall be made in cubic centimetres or millilitres, in cubic decimetres or litres, or in cubic metres. The symbol or the name of the unit shall appear in the immediate vicinity of the indication.

Mass may only be indicated in tonnes, kilograms or grams. The symbol or the name of the unit shall appear in the immediate vicinity of the indication.

(ii) Measuring systems shall be provided with an indicating device giving the volume of liquid measured at metering conditions.

Without prejudice to the provisions in paragraph 2(9)(iii) when a measuring system is fitted with a conversion device, it shall be fitted (in addition to the device indicating volumes at metering conditions) with a device indicating the volume at base conditions or the mass.

Provisions applicable to devices which indicate the volume at metering conditions apply to devices which indicate the volume at base conditions and by analogy to devices which indicate the mass.

(iii) The use of the same display for the indications of volume at metering conditions and of volume at base conditions or of mass is authorized provided that the nature of the displayed quantity is clear and that these indications are available on request.

(iv) A measuring system may have several devices indicating the same quantity. Each shall meet the requirements of this specification. The scale intervals of the various indications may be different.

(v) For any measured quantity relating to the same measurement, the indications provided by various devices shall not deviate one from another by more than one scale interval or the greatest of the two scale intervals if they differ, except otherwise provided in clause 5 (see paragraph 5 (10)(i)(c)).

(vi) Subject to specific provisions for certain types of measuring systems, use of the same indicating device for the indications of several measuring systems (which then have a common indicating device) is authorized provided that one of the following conditions is met:—

(a) it is impossible to use any two of these measuring systems simultaneously,

(b) the indications relating to a given measuring system are accompanied by a clear identification of that measuring system and the user may obtain the indication corresponding to any of the measuring systems concerned, using a simple command.

(10) Elimination of air or gases

(i) General requirements

Measuring systems shall be constructed and installed so that during normal operation, neither air intake nor gas release will occur in the liquid upstream of the meter. If there is a risk that this requirement may not be met, the measuring systems shall incorporate a gas elimination device permitting the proper elimination of any air or undissolved gases which may be contained in the liquid before it enters the meter.

The gas elimination device shall be suitable for the supply conditions and be arranged in such a way that the effect due to the influence of the air or gases on the measuring result does not exceed—

(a) 0.5% of the quantity measured for liquids other than potable liquids and for liquids of a viscosity not exceeding 1 MPa.s,

(b) 1% of the quantity measured for potable liquids and for liquids of a viscosity exceeding 1 MPa.s.

However, it is not necessary for this effect to be less than 1% of the minimum measured quantity.

The values specified in this paragraph apply to the gas elimination device when it is subject to separate control, e.g. for pattern approval.

In this case, they apply to the differences between:

* the meter errors with air intake or with gas, and

* the meter errors without air intake or gas.

(ii) Pumped flow

A gas separator shall be provided when, subject to the provisions in paragraph 2(10) (iv), the pressure at the pump inlet may, even momentarily, fall below either the atmospheric pressure or the saturated vapour pressure of the liquid.

No gas elimination device is required when the pressure at the pump inlet is always greater than the atmospheric pressure and the saturated vapour pressure of the liquid, and if any gaseous formation liable to have a specific effect greater than 1% of the minimum measured quantity cannot form or enter the inlet pipe work of the meter, whatever be the conditions of use.

A gas elimination device is required when the pressure at the pump inlet is always greater than the atmospheric pressure and the saturated vapour pressure of the liquid, but gaseous formations liable to have a specific effect greater than 1% of the minimum measured quantity can occur. When applying this provision, it is necessary to consider, in particular—

(a) gaseous formations likely to occur owing to thermal contraction during shutdown periods; if gaseous formation is possible, a gas extractor is required.

(b) air pockets likely to be introduced into the pipework when the supply tank is completely empty; in case there is a possibility of gaseous formation, a special gas extractor is required.

The gas elimination device shall be installed downstream of the pump or be combined with the pump.

If the gas elimination device is installed below the level of the meter, a non-return valve fitted, if necessary, with a pressure limiting device shall be incorporated to prevent the pipework between the two components from emptying.

The loss of pressure caused by the flow of liquid between the gas elimination device and the meter shall be as small as possible.

If the pipework upstream of the meter incorporates several high points, it may be necessary to provide one or

more automatic or manual evacuation devices.

(iii) Non-pumped flow

When a meter is supplied by gravity without use of a pump, and if the pressure of the liquid in all parts of the pipework upstream of the meter and in the meter itself is greater than the saturated vapour pressure of the liquid and the atmospheric pressure at measuring conditions, a gas elimination device is not necessary. However, after the measuring system has been put into service, an arrangement is required to ensure that it remains correctly filled.

If the pressure of the liquid is likely to be lower than the atmospheric pressure while remaining greater than the saturated vapour pressure, an appropriate device shall prevent entry of air into the meter.

If a meter is supplied under gas pressure, the measuring system shall be so constructed that separation of air or gas is avoided. An appropriate device shall prevent entry of gas into the meter.

In all circumstances, the pressure of the liquid between the meter and the transfer point shall be greater than the saturated vapour pressure of the liquid.

(iv) Viscous liquids

Since the effectiveness of gas separators and gas extractors decreases as the viscosity of the liquids increases, these devices may be dispensed with for liquids with a dynamic viscosity of more than 20 mPa.s at 20°C.

In this case, it is necessary to make provisions to prevent entry of air. The pump shall be so arranged that the inlet pressure is always greater than the atmospheric pressure.

If it is not always possible to meet this condition, a device shall be provided to stop the flow of liquid automatically as soon as the inlet pressure falls below the atmospheric pressure. A pressure gauge shall be used to monitor this pressure. These provisions are not necessary if devices are provided which ensure that no air can enter through the joints in the sections of the pipework under reduced pressure and if the measuring system is so arranged that no air or dissolved gases will be released.

(v) Removal of gases

The gas removal pipe of a gas elimination device shall not include a manually controlled valve if closure of this valve prevents the operation of the gas elimination device. However, if such a closing element is required for safety reasons, it shall be possible to ensure by means of a sealing device that it remains in the open position, unless closure of the valve automatically prevents further measurement.

(vi) Anti-swirl device

If the supply tank of a measuring system is normally to be completely emptied, the outlet of the tank shall be fitted with an anti-swirl device, unless the measuring system incorporates a gas separator.

(vii) General provisions for gas elimination devices

(a) In principle, the gas separated in a gas elimination device is evacuated automatically. However, the automatic operation is not necessary if a device is provided which automatically either stops or sufficiently reduces the flow of liquid when there is a risk of air or gases entering the meter. In the case of shutdown, no measurement shall be possible unless the air or gases are automatically or manually eliminated.

(b) The operational limits of a gas elimination device are as follows:—

(aa) the maximum flowrate(s) for one or more specified liquids,

(bb) the maximum pressure (with no flow running) and minimum pressure (with liquid and without air intake while the pump is running at maximum flowrate) compatible with the correct operation of the gas elimination device,

(cc) the minimum measured quantity for which it is designed.

(viii) Special provisions applicable to gas separators

(a) Within the error limits specified in paragraph 2(10)(i), a gas separator fitted in a measuring system that does not incorporate a gas indicator as specified in paragraph 2(11) shall ensure the elimination of air or gases mixed with the liquid to be measured under the following test conditions :—

(aa) without air or gases the measuring system operates at the maximum flow rate and at the minimum pressure specified for the gas separator,

(bb) then air is introduced or gases are created as long as the measuring system operates. Any proportion by volume of air or gases relative to the liquid is permitted if the gas separator is designed for a maximum flowrate lower than or equal to 20 m^3/h; it is limited to 30% if the gas separator is designed for a maximum flowrate higher than 20 m^3/h (the volumes of air or gases are measured at atmospheric pressure in determining their percentages). The percentage is considered only when the meter is running.

Furthermore, when provided, the automatic gas removal device must continue to operate correctly at the maximum pressure fixed for these gas separators.

(b) Within the error limits specified in paragraph 2(10)(i), a gas separator fitted in a measuring system that incorporates a gas indicator shall ensure the elimination of air or gases mixed with the liquid to be measured under the following conditions :

(aa) without air or gases the measuring system operates at the maximum flowrate and at the minimum pressure specified for the measuring system,

(bb) then air is introduced or gases are created as long as the measuring system operates. The proportion by volume of air or gases relative to the liquid does not exceed—

... 20% for liquids of a viscosity not exceeding 1 MPa.s, other than potable liquids,

... 10% for potable liquids and for liquids of a viscosity exceeding 1 MPa.s.

The percentages are considered only when the meter is running.

When the proportion by volume of air or gases relative to the liquid is greater than the abovementioned percentages and when the gas separator does not meet the requirements with respect to the maximum permissible errors, the gas indicator must clearly reveal the presence of air or gas bubbles.

(ix) Special provisions applicable to gas extractors

A gas extractor or special gas extractor shall, at the maximum flowrate of the measuring system, ensure that elimination of an air or gas pocket of a volume (measured at atmospheric pressure) at least equal to the minimum measured quantity with no resulting additional effect greater than 1% of the minimum measured quantity.

Moreover, a special gas extractor shall also be capable of separating continuously a volume of air or gas mixed with the liquid equal to 5% of the volume of liquid delivered at the maximum flowrate without the resulting additional effect exceeding the limits fixed in paragraph 2(10)(i).

Notes :

(i) A special gas extractor is used mainly in measuring systems mounted on road tankers.

(ii) Installing a special gas extractor is subject to feeding conditions. Therefore, no performance is required for proportions greater than 5%.

(11) Gas indicator

The gas indicator shall be designed so as to provide a satisfactory indication of the presence of air or gases in the liquid.

The gas indicator shall be installed downstream of the meter. In empty hose measuring systems, the gas indicator may be in the form of a weir-type sight glass and may also be used as the transfer point.

The gas indicator may be fitted with a bleed screw or with any other venting device when it forms

a high point of the pipe work. No pipe must be connected to the venting device. Flow indicating devices (e.g. spinners) may be incorporated in gas indicators provided that such devices do not prevent observation of any gaseous formations which could be present in the liquid.

(12) Transfer point

(i) Measuring systems shall incorporate a transfer point. This transfer point is located downstream of the meter in delivery systems and upstream of the meter in receiving systems.

(ii) Measuring systems may be of two types: "empty hose" systems and "full hose" systems: the term "hose" includes rigid pipe work.

(a) Empty hose systems are, in the case of delivery equipment, measuring systems in which the transfer point is located upstream of the delivery hose. This transfer point may be in the form of either a weir type sight glass, or a closing device combined, in each case, with a system which ensures the emptying of the delivery hose after each measuring operation.

(b) Full hose systems, in the case of delivery equipment, are measuring systems in which the transfer point consists of a closing device located in the delivery line. When the delivery line has a free end, the closing device must be installed as close as possible to this end.

(c) In the case of receiving equipment, the same provisions apply by analogy to the reception pipe work upstream of the meter.

(13) Complete filling of the measuring system

(i) The meter and the pipe work between the meter and the transfer point shall be kept full of liquid during measurement and during shutdown periods.

When this condition is not met, especially in the case of permanent installations, the complete filling of the measuring system up to the transfer point shall be effected manually and monitored during measurement and shutdowns. To ensure complete elimination of air and gases from the measuring system, venting devices fitted with small sight glasses whenever possible shall be placed in appropriate positions.

(ii) The additional effect of the pipe work between the meter and the transfer point shall not be greater than 1% of the minimum measured quantity due to variations in temperature, equal to—

- 10°C for exposed pipes,
- 2°C for insulated or underground pipes.

To calculate this additional effect the coefficient of thermal expansion for the liquid shall be rounded to 1.10^{-3} per degree Celsius.

(iii) Subject to the provisions in paragraph 2(10)(iii), a pressure maintaining device shall, if necessary, be installed downstream of the meter to ensure that the pressure in the gas elimination device and in the meter is always greater than both the atmospheric pressure and the saturated vapour pressure of the liquid.

(iv) A measuring system in which the liquid could flow in the opposite direction to that of normal flow when the pump is stopped shall be provided with a non-return valve, fitted with a pressure limiting device, if necessary, when reversal of the flow could result in errors greater than the minimum specified volume deviation.

(v) In empty hose measuring systems, the pipework downstream of the meter and, if necessary, the pipework upstream of the meter shall have a high point so that all parts of the measuring system always remain full.

(vi) In full hose measuring systems which are used for measuring liquids other than liquefied gases, the free end of the hose shall incorporate a device which prevents the draining of the hose during shutdown periods.

When a closing device is installed downstream of this device, the volume of the space between them shall be as small as possible and, in all cases, be less than the minimum specified volume deviation.

(vii) If the hose comprises several components, these shall be assembled either by means of a special connector which keeps the hose

full, or by a connection system which is either sealed or requires the use of a special tool to be disconnected.

(14) Draining

(i) In empty hose measuring systems, draining of the delivery hose referred to in paragraph 2(12)(ii)(a) is ensured by a venting valve. In some cases, this valve may be replaced by special devices, e.g. an auxiliary pump or a compressed gas injector.

In measuring systems intended for minimum measured quantities of less than 10 m^3, these draining devices shall operate automatically.

However, when it is not possible, for duly established technical or safety reasons, to deliver (or to receive) the measured volume contained in hoses of an empty hose measuring system (for example, when measuring liquefied carbon dioxide), this volume shall be smaller than or equal to half the minimum specified volume deviation.

(ii) In full hose measuring systems, particularly those intended for measuring viscous liquids, the nozzle shall be so designed that it cannot retain a volume of liquid exceeding 0.4 times the minimum specified volume deviation.

(15) Variations in the internal volume of full hoses

For full hoses in a measuring system provided with a hose reel, the increase in internal volume due to the change from the coiled hose position when not under pressure to the uncoiled hose position when under pressure without any flow of liquid, shall not exceed twice the minimum specified volume deviation.

If the measuring system is not provided with a hose reel, the increase in internal volume shall not exceed the minimum specified volume deviation.

(16) Branches and bypasses

(i) In measuring systems intended to deliver liquids, no means shall be provided by which any measured liquid can be diverted downstream of the meter. However, two or more delivery outlets may be permanently installed and operated simultaneously or alternatively provided so that any diversion of flow to other than the intended receiving receptacle(s) cannot be readily accomplished or is readily apparent. Such means include, for example, physical barriers, visible valves or indications that make it clear which outlets are in operation, and explanatory signs, if necessary.

For measuring systems intended to receive liquids, such provisions apply by analogy.

A manually controlled outlet may be available for purging or draining the measuring system. Effective means shall be provided to prevent the passage of liquid through any such outlet during normal operation of the measuring system.

(ii) In measuring systems which may operate either with an empty hose or with a full hose and which are equipped with flexible pipes, a non-return valve shall, if necessary, be incorporated in the rigid pipework, leading to the full hose immediately downstream from the selector valve. In addition, the selector valve shall not, in any position, permit connection of the discharge hose, operating as an empty hose to the pipework leading to the full hose.

(iii) Any connections which may be provided for bypassing the meter shall be closed by means of blanking flanges. However, if the operating requirements make such a bypass necessary, it shall be closed either by means of a closing disc or a double closing device with a monitoring valve in between. It shall be possible to ensure closure by means of seals, or there shall be an automatic monitoring of the double block-and-bleed valve in the bypass giving an alarm signal in case of leakage in this valve.

(17) Control and closing mechanisms

(i) If there is a risk that the supply conditions can overload the meter, a flow limiting device shall be provided. This device shall be installed downstream of the meter. It shall be possible to seal it.

(ii) The various positions of the controls of multi-way valves shall be easily visible and located by notches, stops or other fixing devices. Deviations from this requirement are permissible when the adjacent positions of the controls form an angle of 90° or more.

(18) Various provisions

(i) If provided, filters shall not disturb the measuring operation.

(ii) In the case of measuring liquid petroleum products, means for vapour recovery shall not influence the accuracy of measurements such that the maximum permissible error is exceeded.

(19) Markings

(i) Each measuring system, component or sub-system for which pattern approval has been granted shall bear, placed together legibly and indelibly either on the dial of the indicating device or on a special data plate, the following information :—

(a) pattern approval sign

(b) manufacturer's identification mark or trademark

(c) designation selected by the manufacturer, if appropriate

(d) serial number and year of manufacture

(e) characteristics as defined in paragraphs 2(3)(l), 3(1)(l)(a), 2(10)(vii)(b), or 3(1)(vii)(a).

(f) accuracy class, if other than 0.5.

Note : The indicated characteristics should be the actual characteristics of use, if they are known when the plate is affixed. When they are not known, the indicated characteristics are those allowed by the pattern approval certificate.

However, the minimum and the maximum temperatures of the liquids shall appear on the data plate only when they differ from – 10°C and + 50°C respectively.

The minimum measured quantity of the measuring system shall in all cases be clearly visible on the dial of any indicating device visible to the user during the measurement.

If several meters operate in a single system using common components, the marking required for each part of the system may be combined on a single plate.

When a measuring system can be transported without being dismantled, the markings required for each component may also be combined on a single plate.

(ii) Any information, markings or diagrams specified by this Recommendation or possibly by the pattern approval certificate, shall be clearly visible on the dial of the indicating device or within proximity to it.

The markings on the dial of the indicating device of a meter forming a part of a measuring system shall not contravene those on the data plate of the measuring system.

(iii) When volume at base conditions is indicated, these base conditions shall be clearly mentioned in the vicinity of the result of measurement, in the form :

T_b = ... °C (or K)

P_b = ... MPa (or kPa or Pa or bar).

(20) Sealing devices and stamping plate

(i) General

Sealing is preferably carried out by means of lead seals. However, other types of sealing are permitted on fragile instruments or when these seals provide sufficient integrity, electronic seals for instance.

The seals shall, in all cases, be easily accessible.

Sealing should be provided on all parts of the measuring system which cannot be materially protected in any other way against operations liable to affect the measurement accuracy.

It must be prohibited to change parameters which participate in the determination of the results of measurement (parameters for correction and conversion in particular) by means of sealing devices.

Except for direct selling to the public, it may be acceptable that the nature of the measured liquid or its viscosity be manually entered into the calculator at the beginning of the measurement operation [see paragraph 3(1)(v)], even when this datum participates in the correction. This datum and a note explaining that this quantity has been entered manually shall then be printed at the same time as the measurement results.

A plate, referred to as the stamping plate, aimed at receiving the control marks, shall be sealed or permanently attached on a support of the measuring system. It may be combined with the data plate of the measuring system referred to in paragraph 2(19).

In the case of a measuring system used for potable liquids, sealing shall be applied

such that the equipment may be dismantled for cleaning purposes.

(ii) Electronic sealing devices

(a) When access to parameters that participate in the determination of results of measurement is not protected by mechanical sealing devices, the protection shall fulfil the following provisions (except in cases related to the 5th paragraph of paragraph 2(20)(i):—

(aa) access shall only be allowed to authorized people, e.g. by means of a code (key-word) or of a special device (hard key, etc.); the code must be changeable; access by means of only a code is not allowed in the case of direct selling to the public;

(bb) it shall be possible for at least the last intervention to be memorized; the record shall include the date and a characteristic element identifying the authorized person making the intervention [see (a) above]; the traceability of the last intervention shall be assured for at least two years, if it is not over-written on the occasion of a further intervention; if it is possible to memorize more than one intervention, and if deletion of a previous intervention must occur to permit a new record, the oldest record shall be deleted.

(b) For measuring systems with parts which may be disconnected one from another by the user and which are interchangeable, the following provisions shall be fulfilled:—

(aa) It shall not be possible to access parameters that participate in the determination of results of measurements through disconnected points unless the provisions in 2(20)(ii)(a) are fulfilled;

(bb) interposing any device which may influence the accuracy shall be prevented by means of electronic and data processing securities or, if not possible, by mechanical means.

(c) For measuring systems with parts which may be disconnected one from another by the user and which are not interchangeable, the provisions in 2.20.2.2 apply. Moreover, these measuring systems shall be provided with devices which do not allow them to operate if the various parts are not associated according to the manufacturer's configuration.

***Note*:** Disconnections which are not allowed to the user may be prevented, for example by means of a device that prevents any measurement after disconnecting and reconnecting.

3. Requirements for meters and ancillary devices of a measuring system

(1) Meter

The meter(s) of a measuring system shall meet the following requirements, whether or not it (they) is (are) subject to a separate pattern approval:—

(i) Field of operation

(a) The field of operation of a meter is determined at least by the following characteristics:—

(aa) minimum measured quantity;

(bb) measuring range limited by the minimum flowrate, Q_{min}, and the maximum flowrate, Q_{max},

(cc) maximum pressure of the liquid, P_{max},

(dd) nature of the liquid(s) to be measured and limits of kinematic or dynamic viscosity when the indication of the nature of the liquid alone is not sufficient for characterizing its viscosity,

(ee) maximum temperature of the liquid, T_{max},

(ff) minimum temperature of the liquid, T_{min}.

(b) The value of the minimum measured quantity shall be in the form 1×10^n, 2×10^n or 5×10^n authorised units of volume, n being a positive or negative whole number, or zero.

(c) In general, the ratio between the maximum and the minimum flowrate of the meter shall be:—

(I) at least equal to ten for meters

474 GI/11—134

for liquids having a viscosity less than 20 MPa.s at measurement temperature, other than liquefied gases,

(ii) at least equal to five for meters for liquids having a viscosity equal to or greater than 20 MPa.s and for meters for liquefied gases.

However, when the requirements applicable to a particular measuring system specify a lower ratio for that system or its meter, the ratio for the meter may be less than specified above, without being lower than two in application of 2.3(iii).

(ii) Metrological requirements

(a) The maximum permissible errors for a meter, within its field of operation, are equal to those specified in line B of Table 2.

(b) For any quantity equal to or greater than five times the minimum measured quantity, the repeatability error of the meter shall not be higher than two-fifths of the value specified in line A of Table 2.

(c) For a given liquid within their fields of operation, meter shall present a magnitude of the difference between the initial intrinsic error and the error after the endurance test equal to or less than the value specified in line B in Table 2.

(iii) Connections between the flow sensor and the indicating device

In the text, the expression "flow sensor" also means "volume sensor".

The connections between the flow sensor and the indicating device shall be reliable and, for electronic devices, durable, in accordance with paragraphs 4(1)(iii) and 4(3)(ii).

This provision also applies to connections between primary and secondary devices for electromagnetic meters.

(iv) Adjustment device

Meters may be provided with an adjustment device which permits modification of the ratio between the indicated volume and the actual volume of liquid passing through the meter, by a simple command.

When this adjustment device modifies this ratio in a discontinuous manner, the consecutive values of the ratio shall not differ by more than 0.0005 for meters intended to equip measuring systems of class 0.3, and 0.001 for other meters.

Adjustment by means of a bypass of the meter is prohibited.

(v) Correction device

Meters may be fitted with correction devices; such devices are always considered as an integral part of the meter. The whole of the requirements which apply to the meter, in particular the maximum permissible errors specified in paragraph 3(1)(ii)(a), are therefore applicable to the corrected volume (at metering conditions).

In normal operation, non-corrected volume shall not be displayed.

The aim of a correction device is to reduce the errors as close to zero as possible.

All the parameters which are not measured and which are necessary for correcting shall be contained in the calculator at the beginning of the measurement operation.

The correction device shall not allow the correction of a pre-estimated draft in relation to time or volume flow, for example.

Associated measuring instruments shall be fitted with checking devices, as specified in paragraph 4(3)(vi).

(vi) Measuring systems equipped with volumetric meters

The periodic variation of a volumetric meter shall be less than half the minimum specified volume deviation.

When a volumetric meter is approved separately, the pattern approval certificate shall indicate the value of its cyclic volume.

(vii) Measuring systems equipped with turbine meters

(a) The pressure downstream of the meter shall satisfy the manufacturer's specification. The minimum pressure shall be indicated on the data plate of the meter.

(b) Measuring systems equipped with turbine meters shall be fitted with flow straightening devices for preventing, as far as possible, the liquid from any possible rotation and for regulating the flow at the inlet of the meter. These are straight pipes, or flow straighteners, or a combination of straight pipes and a flow straightener.

The flow straightening device shall be placed immediately upstream of the meter and its internal diameter shall be equal to the diameter of the inlet of the meter.

The length of the necessary straight pipes and the characteristics of the flow straighteners are specified by the pattern approval of turbine meters.

(c) Each turbine meter shall be followed by a straight pipe having an internal diameter equal to the outlet diameter of the meter and a length of at least five times this diameter.

(viii) Measuring systems equipped with electromagnetic meters

(a) Measuring systems equipped with electromagnetic meters shall be fitted with a straight pipe upstream of the meter and with a straight pipe downstream of the meter.

The upstream pipe shall have an internal diameter equal to the inlet diameter of the meter and a length of at least ten times this diameter.

The downstream pipe shall have an internal diameter equal to the outlet diameter of the meter and a length of at least five times this diameter.

(b) The time necessary for determining the minimum measured quantity at maximum flow rate, must be at least twenty times the duration of one complete cycle for meters using a.c. or pulsed d.c. field excitation.

(c) The maximum permissible cable length between primary and secondary devices, shall be not more than 100 metres or not more than the value L expressed in metres according to the following formula, whichever is smaller:

$L = (k \times c)/(f \times C)$

Where:

$k = 2 \times 10^{-5}$m

c is the conductivity of the liquid, in S/m

f is the field frequency during the measuring cycle, in Hz

C is the effective cable capacitance per metre, in F/m

(2) Indicating device

(i) General provisions

(a) Reading of the indications shall be precise, easy and non-ambiguous whatever position the indicating device comes to rest; if the device comprises several elements, it shall be arranged in such a way that the reading of the measured volume can be made by simple juxtaposition of the indications of the different elements. The decimal sign shall appear distinctly.

(b) The scale interval of indication shall be in the form 1×10^n, 2×10^n or 5×10^n authorized units of volume, where n is a positive or negative whole number, or zero.

(c) Non-significant scale intervals should be avoided. This does not apply to price indications.

(d) The minimum specified volume deviation shall be equal to or greater than the following value:—

(i) for continuous indicating devices, the volume corresponding to 2mm

on the scale or to one-fifth of the scale interval (of the first element for mechanical indicating devices), whichever is greater,

(ii) for discontinuous indicating device, the volume corresponding to two scale intervals.

(ii) Mechanical indicating device

(a) When the graduation of an element is entirely visible, the value of one revolution of that element shall be in the form 10^n authorized units of volume; this rule however, does not apply to the element corresponding to the maximum range of the indicating device.

(b) On an indicating device having several elements, the value of each revolution of an element whose graduation is entirely visible must correspond to the scale interval of the following element.

(c) An element of the indicating device may have continuous or discontinuous movement, but when elements other than the first have only part of their scales visible through the windows, these elements shall have discontinuous movement.

(d) The advance by one figure of any element having discontinuous movement shall occur and be completed when the preceding element passes from 9 to 0.

(e) When the first element has only a part of its scale visible through a window and has a continuous movement, the dimension of that window shall be at least equal to 1.5 times the distance between two consecutive graduated scale marks.

(f) All scale marks shall have the same width, constant along the line and not exceeding one quarter of the scale spacing. The apparent scale spacing shall be equal to or greater than 2 mm. The apparent height of the figures shall be equal to or greater than 4 mm, unless otherwise specified in the requirements for particular measuring systems.

(iii) Electronic indicating device

The continuous display of volume during the period of measurement is only mandatory in the case of direct selling to the public. However, if interrupting the display of volume interrupts the action of some checking facilities that are mandatory or necessary to ensure correct measurement, the volume passing through the meter during each interruption shall be smaller than or equal to the minimum measured quantity.

(iv) Zero setting device for volume indicating device

(a) A volume indicating device may be provided with a device for setting the indication to zero either by manual operation or by means of an automatic system.

(b) The zero setting device shall not permit any alteration of the measurement result shown by the volume indicating device (other than by making the result disappear and displaying zeros).

(c) Once the zeroing operation has begun it shall be impossible for the volume indicating device to show a result different from that of the measurement which has just been made, until the zeroing operation has been completed.

Indicating devices on fuel dispensers and electronic measuring systems shall not be capable of being reset to zero during measurement. On other measuring systems, either this provision shall be fulfilled or a clearly visible notice shall be provided on the indicating device stating that this operation is prohibited.

(d) On continuous indicating devices, the residual indication after return to zero shall not be more than half the minimum specified volume deviation.

(e) On discontinuous indicating devices, the indication after return to zero shall not be zero without any ambiguity.

(3) Price indicating device

(i) A volume indicating device with aligned figures and zero setting may be

complemented with a price indicating device, also with aligned figures and zero setting.

(ii) The selected unit price shall be displayed by an indicating device before the start of the measurement. The unit price shall be adjustable; changing the unit price may be carried out either directly on the measuring system or through peripheral equipment.

The indicated unit price at the start of a measurement operation shall be valid for the whole transaction. A new unit price shall only be effective at the moment a new measurement operation may start.

A time of at least 5 s. shall elapse between indicating a new unit price and before the next measurement operation can start, if the unit price is set from peripheral equipment.

(iii) The provisions in paragraph 3.(2) relating to volume indicating devices apply also, by analogy, to the price indicating devices.

(iv) The monetary unit used, or its symbol, shall appear in the immediate vicinity of the indication.

(v) The zero setting devices of the price indicating device and of the volume indicating device shall be designed in such a way that zeroing either indicating device automatically involves zeroing the other.

(vi) The minimum specified price deviation shall be greater than or equal to the following value:—

- for continuous indicating devices, the price corresponding to 2 mm on the scale or to one-fifth of the scale interval (of the first element for mechanical indicating devices), whichever is greater,
- for discontinuous indicating devices, the price corresponding to two scale intervals.

However, the interval of one-fifth of the scale interval or of 2 mm in the case of the first hyphen or the scale interval in the case of the second hyphen needs not correspond to a value less than that of the smallest coin in circulation in the country in which the equipment is used.

(vii) The difference between the indicated price and the price calculated from the unit price and the indicated volume shall not exceed the minimum specified price deviation.

However, this difference need not be less than the smallest monetary value as defined in paragraph 3(3)(vi).

Moreover, this requirement does not apply when the unit price has been changed between two measurements.

(viii) On continuous indicating devices, the residual indication after zeroing shall not exceed half the minimum specified price deviation. However, this indication need not be less than the smallest monetary value as defined in paragraph 3(3)(vi).

(ix) On discontinuous indicating devices, the indication after zeroing shall be zero without any ambiguity.

(4) Printing device

(i) The printed scale interval shall be in the form of 1×10^n, 2×10^n or 5×10^n authorized units of volume, n being a positive or negative whole number, or zero, and shall not be greater than the minimum specified volume deviation.

The printed scale interval shall not be smaller than the smallest scale interval of the indicating devices.

(ii) The volume printed shall be expressed in one of the units authorized for the indication of volume.

The figures, the unit used or its symbol and the decimal sign, if any, shall be printed on the ticket by the device.

(iii) The printing device may also print information identifying the measurement such as: sequence number, date, identification of the dispenser, type of liquid, etc.

If the printing device is connected to more than one measuring system, it must print the identification of the relevant system.

(iv) If a printing device allows repetition of the printing before a new delivery has started, copies shall be clearly marked as such, for example by printing, "duplicate".

(v) If the volume is determined by the difference between two printed values, even if one is expressed in zeros, it shall be impossible to withdraw the ticket from the printing device during measurement.

(vi) Where the printing device and volume indicating device each have a zeroing

that resetting one of them to zero also resets the other.

(vii) The printing device may print, in addition to the measured quantity, either the corresponding price or this price and the unit price.

In the case of "direct selling to the public" it may also print only the price to be paid (without the volume) when it is connected to a volume indicating device and to a price indicating device both of which are visible to the purchaser.

The figures, the monetary unit used or its symbol and the decimal sign, if any, shall be printed by the device.

(viii) The printed price scale interval shall be in the form 1×10^n, 2×10^n or 5×10^n monetary units, n being a positive or negative whole number, or zero; it shall not exceed the minimum specified price deviation. However, it need not be less than the smallest monetary value specified in paragraph 3(3)(vi).

(ix) If the volume indicating device is not fitted with a price indicating device, the difference between the printed price and the price calculated on the basis of the indicated volume and the unit price shall comply with the requirements in paragraph 3(3)(vii).

(x) Electronic printing devices are also subject to the requirements in paragraph 4(3)(v).

(5) Memory device

(i) Measuring systems may be fitted with a memory device to store measurement results until their use or to keep a trace of commercial transactions, providing proof in case of a dispute. Devices used to read stored information are considered as included in the memory devices.

(ii) The medium on which data are stored must have sufficient permanency to ensure that the data are not corrupted under normal storage conditions. There shall be sufficient memory storage for any particular application.

(iii) When the storage is full, it is permitted to delete memorized data when both the following conditions are met:

- data are deleted in the same order as the recording order and the rules established for the particular application are respected,
- deletion is carried out after a special manual operation.

(iv) Memorization shall be such that it is impossible in normal use to modify stored values.

(v) Memory devices shall be fitted with checking facilities according to paragraph 4(3)(v). The aim of the checking facility is to ensure that stored data correspond to the data provided by the calculator and that restored data correspond to stored data.

(6) Pre-setting device

(i) The selected quantity is pre-set by operating a device provided with scales and scale marks or a numerical device which indicates that quantity. The preset quantity shall be indicated before the start of the measurement.

(ii) Where pre-setting is effected by means of several controls which are independent of each other, the scale interval corresponding to one control shall be equal to the pre-setting range of the control of the next lower order.

(iii) Pre-setting devices may be so arranged that the repetition of a selected quantity does not require a new setting of the controls.

(iv) Where it is possible to view simultaneously the figures of the display device of the pre-setting device and those of the volume indicating device, the former shall be clearly distinguishable from the latter.

(v) Indication of the selected quantity may, during measurement, either remain unaltered or return progressively to zero. However, for an electronic pre-setting device it is acceptable to indicate the present value on the indicating device for volume or price by means of a special operation with the restriction that this value shall be replaced by the zero indication for volume or price before the measurement operation can start.

(vi) In the case of a prepaid or pre-ordered delivery, the difference found under normal operating conditions, between the pre-set quantity and the quantity shown by the volume or price indicating device at the end of the measurement operation, shall not exceed the minimum specified volume or price deviation.

(vii) The pre-set quantities and the quantities shown by the volume indicating device shall be expressed in the same unit. This unit (or its symbol) shall be marked on the pre-setting mechanism.

(viii) The scale interval of the pre-setting device shall not be less than the scale interval of the indicating device.

(ix) Pre-setting devices may incorporate a device to permit the flow of liquid to be stopped quickly when necessary.

(x) Measuring systems with a price indicating device may also be fitted with a price pre-setting device which stops the flow of the liquid when the quantity delivered corresponds to the pre-set price. The requirements in paragraph 3(6)(i) to 3(6)(ix) apply by analogy.

(7) Conversion device

(i) Measuring systems may be fitted with a conversion device as defined in paragraph 1(12) of Part 1. The provisions of the paragraph 3(7) mainly apply to electronic conversion devices in which conversion calculations are made numerically by an electronic computer. Analogous provisions could apply by analogy to mechanical conversion devices.

(ii) The calculation of the conversion factor shall be made according to these specifications.

(iii) As a rule, the parameters which characterize the measured liquid and which intervene in the conversion formula shall be measured using associated measuring instruments. However, some of these parameters may be not measured, or associated measuring instruments may be not subject to control when their influence on the conversion factor is negligible (less than one-tenth of the maximum permissible error as specified in paragraph 2(5)(i).

For example, in many cases it is possible to make a conversion to volume in base conditions by measuring temperature only, when pressure and density vary little.

(iv) Associated measuring instruments shall comply with applicable International Recommendations and Standards. In addition, maximum permissible errors for these instruments are those specified in paragraph 2(7)(ii).

(v) Associated measuring instruments shall be installed near the meter so as to determine the relevant quantities as they exist in the meter in a sufficiently accurate way.

The changes in indication due to the location of the measuring points shall not exceed 0.2 times the maximum permissible error for the measuring system. Subject to fulfilment of this requirement, the same associated measuring instruments may be used for making conversions (and corrections) for several meters.

These instruments shall not affect the correct functioning of the meter(s).

Note : These requirements are checked by calculation.

(vi) All the parameters which are not measured and which are necessary for the conversion shall be present in the calculator at the beginning of the measurement operation. It must be possible to print or to indicate them from the calculator.

For a mechanical conversion device that cannot print or indicate these values, a seal must be broken to change any setting.

(vii) In addition to the volume at metering conditions and the volume in base conditions or the mass, which shall be displayed according to paragraph 2(9)(ii) the values of other measured quantities (density, pressure, temperature) shall be accessible for each test measurement.

Scale intervals for density, pressure and temperature shall be smaller than or equal to one quarter of the maximum permissible errors fixed in paragraph 2(7)(ii) for associated measuring instruments.

(8) Calculator

All parameters necessary for the elaboration of indications that are subject to legal metrology control, such as unit price, calculation table, correction polynomial, etc. shall be present in the calculator at the beginning of the measurement operation.

The calculator may be provided with interfaces permitting the coupling of peripheral equipment. When these

interfaces are used, the instrument shall continue to function correctly and its metrological functions shall not be capable of being affected.

4. Measuring systems equipped with electronic devices

(1) General requirements

(i) Electronic measuring systems shall be designed and manufactured such that their errors do not exceed the maximum permissible errors as defined in paragraph 2(5) under rated operating conditions.

(a) Interruptible electronic measuring systems shall be designed and manufactured such that, when they are exposed to the disturbances specified in paragraph 4 of Annexure A.

- either (a) significant faults do not occur,
- or (b) significant faults are detected and acted upon by means of checking facilities.

This provision may apply separately to:

- each individual cause of significant fault and/or
- each part of the measuring system.

(b) Non-interruptible measuring systems shall be designed and manufactured in such a way that no significant faults occur when they are exposed to the disturbances specified in paragraph 4 of Annexure A.

(ii) It is the responsibility of the manufacturer to decide whether a given pattern of measuring system is interruptible or not, taking into account the applicable rules of security. However, measuring systems for direct selling to the public shall be interruptible.

When, at the time of pattern approval, it is not possible to specify the future utilization of the instrument, the requirements in paragraph 4(1)(i)(b) apply.

(iii) The requirements in paragraph 4(1)(i) shall be met durably. For this purpose electronic measuring systems shall be provided with the checking facilities specified in 4(3).

(iv) A pattern of a measuring system is presumed to comply with the requirements in paragraph 4(1)(i) and paragraph 4(1)(iii) if it passes the inspection and tests specified in paragraph 6(1)(xi)(a) and paragraph 6(1)(xi)(b).

(v) Measuring systems shall permit the retrieval of the information relating to the measured volume contained within the instrument when a significant fault occurred and was detected by checking facilities.

(2) Power supply device

(I) When the flow is not interrupted during the failure of the principal power supply device, the measuring system shall be provided with an emergency power supply device to safeguard all measuring functions during that failure.

(II) When the flow is interrupted during the failure of the principal power supply device, the provisions in paragraph 4(2)(ii) shall be met, or data contained at the moment of the failure shall be saved and displayable on an indicating device subject to legal metrology control for sufficient time to permit the conclusion of the current transaction.

The absolute value of the maximum permissible error for the indicated volume in this case is increased by 5% of the minimum measured quantity.

(3) Checking facilities

(i) Action of checking facilities

The detection by the checking facilities of significant faults shall result in the following actions, according to the type:

(a) Checking facilities of type N: a visible or audible alarm for the attention of the operator.

(b) Checking facilities of type I or P:

(aa) for non-interruptible measuring systems:

- automatic correction of the fault, or
- stopping only the faulty device when the measuring system without that device continues to comply with the regulations, or
- a visible or audible alarm for the operator; this alarm shall continue until the cause of the alarm is suppressed. In addition, when the measuring system transmits data to peripheral equipment, the transmission shall be accompanied by a message indicating the presence of a fault.

Note : The third hyphen is not applicable for the disturbances specified in Para 4 of Annexure A. In addition, the instrument may be provided with devices to estimate the amount of liquid having passed through the installation during the occurrence of the fault. The result of this estimate shall not be capable of being mistaken for a valid indication.

(bb) for interruptible measuring systems, in particular for fuel dispensers:

- automatic correction of the fault, or
- stopping only the faulty device, when the measuring system without that device continues to comply with the regulations, or
- stopping the flow.

(ii) Checking facilities for the measurement transducer

The objective of these checking facilities is to verify the presence of the transducer, its correct operation and the correctness of data transmission.

(a) When the signals generated by the flow sensor are in the form of pulses, each pulse representing an elementary volume, at least security level B defined by ISO 6551 *Cabled transmission of electric and/or electronic pulsed data* is required.

These checking facilities shall be of type P and the checking shall occur at time intervals not exceeding the duration of the measurement of an amount of liquid equal to the minimum specified volume deviation.

It shall be possible during pattern approval and initial verification to check that these checking facilities function correctly:

(aa) by disconnecting the transducer, or

(bb) by interrupting one of the sensor's pulse generators, or

(cc) by interrupting the electrical supply of the transducer.

(b) For electromagnetic meters only, where the amplitude of the signals generated by the measurement transducer is proportional to the flowrate, the following procedure may be used:

A simulated signal with a shape similar to that of the measurement signal is fed into the input of the secondary device, representing a flowrate between the minimum and maximum flowrate of the meter. The checking facility shall check the primary and the secondary device. The equivalent digital value is checked to verify that it is within predetermined limits given by the manufacturer and consistent with the maximum permissible errors.

This checking facility shall be of type P or I. In the latter case, the checking shall occur at least every five minutes.

Note : Following this procedure, additional checking facilities (more than two electrodes, double signal transmission etc.) are not required.

(c) For other technologies checking facilities providing equivalent levels of security remain to be developed.

(iii) Checking facilities for the calculator

The objective of these checking facilities is to verify that the calculator system functions correctly and to ensure the validity of the calculations made.

There are no special means required for indicating that these checking facilities function correctly.

(a) The checking of the functioning of the calculation system shall be of type P or I. In the latter case, the checking shall occur at least every five minutes, except in the case of fuel dispensers, for which it shall occur at each delivery. The objective of the checking is to verify that:

(aa) the values of all permanently memorized instructions and data are correct, by such means as—

- summing up all instructions and data codes and comparing the sum with a fixed value,
- line and column parity bits (LRC and VRC),

  cyclic redundancy check (CRC 16),
- double independent storage of data,
- storage of data in "safe coding", for example protected by checksum, line and column parity bits,

(bb) all procedures of internal transfer and storage of data relevant to the measurement result are performed correctly, by such means as :

- write-read routine,
- conversion and re-conversion of codes,
- use of "safe coding" (check sum, parity bit),
- double storage.

(b) The checking of the validity of calculations shall be of type P. This consists of checking the correct value of all data related to the measurement whenever these data are internally stored or transmitted to peripheral equipment through an interface; this check may be carried out by such means as parity bit, check sum or double storage. In addition, the calculation system shall be provided with a means of controlling the continuity of the calculation program.

(iv) Checking facility for the indicating device

The objective of this checking facility is to verify that the primary indications are displayed and that they correspond to the data provided by the calculator. In addition, it aims at verifying the presence of the indicating devices, when they are removable. These checking facilities shall either have the form as defined in paragraph 4(3)(iv)(a) or the form as defined in paragraph 4(3)(iv)(b).

(a) The checking facility of the indicating device is of type P; however, it may be of type I if a primary indication is provided by another device of the measuring system, or if the indication may be easily determined from other primary indications (for example, in the case of a fuel dispenser it is possible to determine the price to pay from the volume and the unit price).

Means may include, for example:

(aa) for indicating devices using incandescent filaments or LEDs, measuring the current in the filaments,

(bb) for indicating devices using fluorescent tubes, measuring the grid voltage,

(cc) for indicating devices using electromagnetic shutters, checking the impact of each shutter,

(dd) for indicating devices using multiplexed liquid crystals, output checking of the control voltage of segment lines and of common electrodes, so as to detect any disconnection or short circuit between control circuits.

(b) The checking facility for the indicating device shall include type I or type P checking of the electronic circuits used for the indicating device (except the driving circuits of the

display itself); this checking shall meet the requirements in paragraph 4(3)(i)(a).

It shall also provide visual checking of the entire display which shall meet the following description:—

(aa) for fuel dispensers:

- displaying all the elements ("eights" test)
- blanking all the elements ("blank" test)
- displaying "zeros"
- Each step of the sequence shall last at least 0.75 second.

(bb) for all other measuring systems, the test sequence as described under (a) or any other automatic test cycle which indicates all possible states for each element of the display.

This visual checking facility shall be of type I for fuel dispensers and of type N for other measuring systems, but it is not mandatory for a malfunction to result in the actions described in paragraph 4(3)(i).

(c) It shall be possible during verification to determine that the checking facility of the indicating device is working, either:

- by disconnecting all or part of the indicating device, or
- by an action which simulates a failure in the display, such as using a test button.

(v) Checking facilities for ancillary devices

An ancillary device (repeating device, printing device, self-service device, memory device, etc.) with primary indications shall include a checking facility of type I or P. The object of this checking facility is to verify the presence of the ancillary device, when it is a necessary device, and to verify the correct transmission of data from the calculator to the ancillary device.

In particular, the checking of a printing device aims at ensuring that the printing controls correspond to the data transmitted by the calculator. At least the following shall be checked:

- presence of paper,
- the electronic control circuits (except the driving circuits of the printing mechanism itself).

It shall be possible during pattern approval and other verifications to check that the checking facility of the printing device is functioning by an action simulating a printing fault, such as using a test-button.

Where the action of the checking facility is a warning, this shall be given on or by the ancillary device concerned.

(vi) Checking facilities for the associated measuring instruments

Associated measuring instruments shall include a checking facility of type P. The aim of this checking facility is to ensure that the signal given by these associated instruments is inside a pre-determined measuring range.

Examples:

- four wire transmission for resistive sensors,
- frequency filters for density meters,
- control of the driving current for 4-20 mA pressure sensors.

5. Requirements specific to certain types of measuring systems

(1) Fuel dispensers

Except where otherwise specified, the requirements in this sub-clause do not apply to LPG dispensers.

(i) By design, the ratio between the maximum flowrate and the minimum flowrate for these systems shall be at least ten; on site, this ratio may be smaller provided that it is not less than five.

(ii) When the measuring system includes its own pump, a gas elimination device shall be installed, immediately upstream of the meter inlet. Where a gas indicator is fitted, it shall not have a venting device as mentioned in paragraph 2(11).

(iii) When the measuring system is intended for installation in a centrally pumped system, or for a remote pump, the general provisions in paragraph 2(10) shall be applied.

If it is not intended to install a gas elimination device the manufacturer or

installer has to prove that there is no risk for air intake or gas release. In this case the minimum level in the storage tank must be automatically secured and any leakage shall be checked [see also paragraph 2(10)(ii)].

(iv) Fuel dispensers shall be equipped with a device for resetting the volume indicating device to zero.

The minimum height for the figures of the resettable volume indicator is 10 mm.

If these systems also include a price indicating device, this indicating device shall be fitted with a zero resetting device. The minimum height for the price indicator remains 4 mm [paragraph 3(2)(ii)(f)].

(v) When only one nozzle can be used during a delivery, and after the nozzle has been replaced, the next delivery shall be inhibited until the indicating device has been reset to zero.

When two or more nozzles can be used simultaneously or alternately, and after the utilized nozzles have been replaced, the next delivery shall be inhibited until the indicating device has been reset to zero. Moreover, by design, the provisions in the first paragraph of paragraph 2(16)(i) shall be fulfilled.

The above requirements do not apply when an auxiliary hand pump is used.

(vi) Measuring systems having a maximum flowrate not greater than 3.6 m^3/h shall have a minimum delivery not exceeding 5 L.

(vii) When the measuring system is fitted with a ticket printing device which is subject to control, this printing device shall comply with the relevant requirements in 3.4. In addition, any printing operation shall prevent the continuation of the delivery until a reset to zero has been performed. However, the printing operation shall not change the quantity indicated on the indicating device.

(viii) Fuel dispensers shall be interruptible.

(ix) In addition to requirements in paragraph 4(2)(ii), electronic fuel dispensers shall be such that the minimum duration of operation of the display shall be either—

(a) at least 15 min continuously and automatically after the failure of the principal electrical supply, or

(b) a total of at least 5 min in one or several periods controlled manually during one hour after the failure.

Note : If a test during pattern approval is necessary to verify that the fuel dispenser fulfils this requirement, the instrument has to be supplied with electric power normally for the 12 hours which preceded the test. Before this supply the battery (if provided) may be unloaded.

In addition, fuel dispensers shall be designed so that an interrupted delivery cannot be continued after the power supply device has been re-established if the power failure has lasted more than 15 s.

(x) Electronic fuel dispensers shall be such that the delay time between the measurement value and the corresponding indicated value shall not exceed 500 ms.

Several fuel dispensers may have a common indicating device if and only if the first provision in paragraph 2(9)(vi) is met.

(xi) The checking of the operation of the calculator, as described in paragraph 4(3)(iii)(a), shall be performed at least once for each delivery.

(xii) It is not required to display volumes, and prices if applicable, that correspond to a small number of scale intervals at the beginning of the delivery, and to start the display with that volume and the corresponding price.

The volume thus hidden shall not be greater than two times the minimum specified volume deviation. The hidden price shall not be greater than the price corresponding to that volume.

(2) Measuring systems on road tankers for the transport and delivery of liquids of low viscosity (≤ 20 MPa.s) and stored at atmospheric pressure with the exception of potable liquids

(i) The provisions hereafter apply to measuring systems mounted on road tankers or transportable tanks.

(ii) Tanks equipped with measuring systems may comprise one or more compartments.

(iii) The compartments of road tankers shall be fitted with an anti-swirl device, except when the measuring system is fitted with a gas separator which complies with paragraph 2(10)(viii).

(iv) When a tank comprises more than one compartment, each compartment shall be provided with an individual (manual or automatic) closing device in each outlet line.

(v) In conformity with national-regulations on their use, each measuring system shall be allocated to a specific product or to a range of products for which the meter has been approved.

The pipework shall, as far as possible, be designed so that products cannot become mixed in the measuring system.

(vi) Subject to the requirements in paragraph 2(16), a measuring system mounted on a road tanker may include empty or full hoses or both. Where several hoses are intended to operate alternatively, the changing of the delivery path shall be impossible during a measurement operation. To this end, the change of the delivery path may be linked to the resetting to zero of the volume indicating device.

(vii) The volume indicating device shall include a zero resetting device complying with paragraph 3(2)(iv).

When the measuring system is fitted with a ticket printing device, any printing operation shall prevent the continuation of the delivery until a reset to zero has been performed, except for printing devices determining the delivered volume by means of two consecutive indications.

(viii) Measuring systems mounted on road tankers may be designed to operate by pump only, or by gravity only, or with the choice of either pump or gravity, or by gas pressure.

(a) Measuring systems fed by pump only may operate either empty hose or full hose.

(b) If there is a risk that the requirements in paragraph 2(10)(ii) related to the absence of air or gas cannot be complied with, the meter shall have one of the following gas elimination devices upstream of it:

- a suitable gas separator conforming to paragraph 2(10)(viii),
- a special gas extractor, conforming to paragraph 2(10)(ix),
- a gas extractor, conforming to paragraph 23(10)(ix).

When, in a measuring system, the pressure at the outlet of the meter can be lower than the atmospheric pressure while remaining higher than the saturated vapour pressure of the measured product, the above devices shall be combined with an automatic system for slowing down and stopping the flow to prevent any air from entering the meter.

When the pressure at the outlet of the meter cannot be lower than atmospheric pressure (this is especially the case for systems operating solely full hose), the use of automatic devices for slowing down and stopping the flow is not required.

(c) The special gas extractor shall be fitted with a sight glass.

(d) Measuring systems operating solely by gravity shall comply with the following requirements.

(e) The equipment shall be so constructed that the total contents of the compartment(s) can be measured at a flowrate greater than or equal to the minimum flowrate of the measuring system.

(f) If there are connections with the gas phase in the tank of the road

tanker, appropriate devices shall prevent any gas from entering the meter.

(g) The requirements in paragraph 2(10)(iii) concerning non-pumped flow shall apply.

A pump downstream of the transfer point for increasing the flowrate may be authorized if the foregoing provisions are complied with. This pump shall not cause a fall in pressure in the meter.

(h) For measuring systems which include a manual release to the atmosphere immediately downstream of the transfer point, a gas indicator is mandatory.

(i) Measuring systems capable of being operated either by gravity or by pump shall comply with the requirements in paragraph 5(2)(viii)(a) and 5(2)(viii)(b).

(j) Measuring systems operated by means of gas pressure may operate empty hose or full hose. The pipework which links the meter to the device intended to prevent any gas from entering the meter as specified in point paragraph 2(10)(iii) shall have no constriction or component likely to cause a pressure loss which could generate gas pockets by releasing the gas dissolved in the liquid.

These systems shall include a pressure gauge which indicates the pressure in the tank. The dial of this gauge shall indicate the range of permissible pressures.

(3) Measuring systems for the unloading of ships' tanks and of rail and road tankers using an intermediate tank

(i) Measuring systems designed to measure volumes of liquids during the unloading of ships' tanks and of rail and road tankers may include an intermediate tank in which the liquid level determines the transfer point. This intermediate tank may be designed to ensure the elimination of gas.

The cross section of the intermediate tank shall be such that a volume equal to the minimum specified volume deviation corresponds to a difference in level of at least 2 mm.

(ii) In the case of road and rail tankers, the intermediate tank shall automatically ensure a constant level, visible or detectable, at the beginning and at the end of the measurement operation. The level is considered to be constant when it settles within a range corresponding to a volume of no more than the minimum specified volume deviation.

(iii) In the case of ships' tanks, it is not necessary to provide for the automatic maintenance of a constant level. Where such a provision is not made, it shall be possible to measure the contents in the intermediate tank.

If the ship's tank is unloaded by means of pumps located in the bottom of the ship, the intermediate tank may be used only at the beginning and at the end of the measurement operation.

(4) Measuring systems for liquefied gases under pressure (other than LPG dispensers)

(i) Only full hose measuring systems are authorized.

(ii) A pressure maintaining device, located downstream of the meter, shall ensure that the product in the meter remains in a liquid state during the measurement. The necessary pressure may be maintained either at a fixed value or at a value adjusted to suit the measurement conditions.

(a) When the pressure is maintained at a fixed value, this value shall be at least equal to the vapour pressure of the product at a temperature 15°C above the highest possible operating temperature. It shall be possible to protect the adjustment of the pressure maintaining device with a seal.

(b) When the pressure is adjusted to suit the measurement conditions, this pressure shall exceed the vapour pressure of the liquid during the measurement by at least 100 kPa (1 bar). This adjustment shall be automatic.

(c) For stationary measuring systems for industrial use, the competent metrology service may authorize

manually-adjustable pressure maintaining devices. The pressure at the meter outlet shall then be at least equal to the vapour pressure of the product at a temperature 15°C above the temperature of the measurement. It is then necessary to attach a diagram to the measuring system, giving the vapour pressure of the measured product as a function of its temperature. If it is anticipated that these measuring systems may have to operate unsupervised over long periods, the temperature and pressure shall be registered continuously by means of appropriate instruments.

(iii) A gas elimination device shall be fitted upstream of the meter. However, if it is demonstrated that no vapour release will occur during measurements a gas elimination device is not mandatory. This demonstration shall include tests under the worse conditions.

(a) The gas separator shall comply with the general requirements in paragraph 2(10)(i), either for the liquefied gas itself or for a liquid of higher viscosity.

However, because of the low viscosity of liquefied gases and due to the difficulty of control, it is accepted that when the length of the pipework linking the meter to the feed tank does not exceed 25 m, a gas separator may be approved if its useful volume is at least equal to 1.5% of the volume delivered in one minute at maximum flowrate. When the length of this pipework exceeds 25 m, the useful volume of the gas separator shall be at least equal to 3% of the volume delivered in one minute at maximum flowrate.

The gas outlet pipe of the separator may be connected to the space in the feed tank which contains the gaseous phase, or to an independent pressure maintaining device set to a pressure from 50 to 100 kPa (0.5 to 1 bar) lower than the pressure at the meter outlet. This pipe may incorporate a shut-off valve, which meets the requirements in paragraph 2(10)(v).

(b) The volume of the condenser tank depends on the volume of the pipework between the supply tank valve and the pressure maintaining valve, downstream of the meter. The volume of this condenser tank shall be at least equal to twice the reduction in volume of the liquid which is likely to occur between these valves if the temperature drops by a value conventionally fixed at 10°C for exposed pipes and 2°C for insulated or underground pipes.

To calculate the contraction, the coefficient of thermal expansion shall be rounded to 3×10^{-3} per degree Celsius for propane and propylene and 2×10^{-3} per degree Celsius for butane and butadiene. For other products with a high vapour pressure, the values of the coefficient to be adopted shall be specified by the competent metrology service.

The condenser tank shall be fitted with a manual blow off valve. It shall be fitted at the high point in the pipework of the measuring system of which it is part.

The volume resulting from the above calculation may be divided between several condenser tanks located at high points in the pipework.

(iv) A thermometer well or, when this thermometer well is not imposed by specific professional practices, another means for measuring temperature, shall be provided close to the meter. The thermometer used shall have a scale interval not exceeding 0.5°C and shall be verified.

Provisions shall be made for fitting a pressure measuring device between the meter and the pressure maintaining device. This measuring

device shall be available for verification. If necessary, provisions for sealing shall be made.

(v) When the volume is measured using a system mounted on a road tanker, any connection between the gaseous phases of the vehicle's tank and of the receiving tank is prohibited unless it is essential for completing a measurement, in which case a non-return valve is mandatory.

For other measuring systems for liquefied gas, such connections are permitted when the volumes of gas transferred via these connections are measured by means of suitable measuring instruments.

(vi) Safety valves may be incorporated in measuring systems in order to prevent abnormally high pressures. If they are located downstream of the meter, they shall open to the atmosphere or be connected to the receiving tank.

In no case shall the safety valves located upstream of the meter be connected to the valves located downstream by pipes which bypass the meter.

(vii) When the conditions of operation require the use of detachable hoses, these hoses shall remain full if their volumes are greater than the minimum specified volume deviation.

Detachable full hoses shall be fitted with special connections for full hoses, so-called couplers or self-sealing valves. Manually operated blow-off devices shall be provided at the ends of these hoses, if necessary.

(viii) The control valve of the double closing device mentioned in paragraph 2(16)(iii) for pipework bypassing the meter, if provided, may be closed for safety reasons. In this case, any leakage shall be monitored by a pressure gauge located between the two shut off valves or by any other equivalent system.

(ix) For measuring systems mounted on road tankers the volume indicating device and its printing device, if provided, shall comply with the requirements in paragraph 5(2)(vii).

(x) The provisions in paragraph 5(4) also apply for measuring systems for liquefied carbon dioxide with the following exceptions:

- only empty hose measuring system [are authorized (see paragraph 5(4)(i)],
- the connection between the gaseous phases of the vehicle's tank and of the receiving tank is authorized if (i) a device is installed to allow compensation of the delivered quantity by an amount relating to the quantity of vapour returned in the gas line, or (ii) compensation is made by automatic or manual calculation. However, in both cases, flow from the delivery tank to the receiving tank by means of the gas return line shall be securely prevented [see paragraph 5(4)(v)],
- the requirements of paragraph 5(4)(vii) are not mandatory for these systems.

(5) Measuring systems for milk

(i) The following requirements apply to transportable measuring systems which are mounted on road tankers and used for the collection of milk, to fixed measuring systems used for the reception of milk at the dairy, and to fixed or transportable measuring systems used for the delivery of milk.

(ii) The transfer point in reception installations is defined by a constant level in a tank upstream of the meter. It must be possible to check this constant level before and after each measurement. The level shall be established automatically.

(a) When the meter is fed by means of a pump, the constant level tank may be placed either upstream of the pump or between the pump and the meter.

(b) If the constant level tank is placed upstream of the pump, the tank itself may be fed by gravity, by emptying milk churns, by means of an auxiliary pump or by means of a vacuum system.

If the milk is introduced by means of a pump or a vacuum system, a gas

elimination device is necessary. This device may be combined with the constant level tank.

(c) If the constant level tank is placed between the pump and the meter, this tank shall ensure that gas is eliminated.

(d) Notwithstanding the requirements of paragraph 2(13)(iii), the meter may be fed by means of a vacuum system. In this case, the pressure inside the pipework connecting the constant level tank to the meter will be lower than atmospheric pressure and the tightness of the joints of this connection must be particularly well ensured. It must be possible to check the tightness and a notice plate drawing attention to this checking shall be provided.

(e) In all installations for reception, the pipework upstream of the constant level device shall empty completely and automatically under the rated operating conditions.

(f) The constant level is monitored by means of a sight glass or a level indicating device. The level is considered to be constant when it settles within a range defined by two marks at least 15 mm apart and corresponding to a difference in volume of no more than twice the minimum specified volume deviation.

(g) If, in order to meet the above condition, devices for reducing the flowrate are incorporated in the measuring system, the flowrate during the period of reduced flowrate shall be at least equal to the minimum flowrate of the meter.

(h) If, in a reception installation at a dairy, the measured liquid flows to a level lower than that of the meter, a device shall automatically ensure that the pressure at the outlet of the meter remains above atmospheric pressure.

(i) If a volume of liquid is required to fill the measuring system prior to the first measurement, it shall be indicated on the data plate of the measuring system so that it can be taken into account, by calculation, in the first measurement of a reception period. The first volume measured by the measuring system during a reception period shall be equal to or greater than the volume which is necessary for the complete filling of the measuring system.

(iii) Measuring systems used for delivery shall comply with the general requirements in clause 2 and with those in clause 3.

(iv) Notwithstanding the general requirements in paragraph 2(10) concerning the elimination of air or gases, the gas elimination devices shall comply with the requirements in paragraph 2(10)(i) solely under the conditions of use, i.e. with entry of air at the beginning and end of each measuring operation of delivery.

The mounting of delivery installations shall be such that the pressure of the liquid at the level of the joint to the supply tank is always greater than atmospheric pressure.

(v) The volume indicating device of a transportable measuring system and its printing device, if provided, shall comply with the requirements in paragraph 5(2)(vii).

(6) Measuring systems on pipeline and systems for loading ships

(i) The ratio between the maximum flowrate and the minimum flowrate of the meter of the measuring system may be less than the value specified in the relevant paragraph in paragraph 3(1)(i)(c).

In this case, the measuring system shall be fitted with an automatic checking device to verify that the flowrate of the liquid to be measured is within the restricted measuring range of the measuring system.

This checking device shall be of type P and shall meet the requirements in paragraph 4(3)(i)(b).

The maximum and minimum flowrates may be determined in relation to the liquid to be measured and manually introduced into the calculator.

(ii) Prevention of gas flow

The measuring system shall be provided with a means of eliminating any air or gas contained in the liquid unless the entry of air into the liquid or release of gas from

the liquid is prevented by the configuration of the pipework or by the arrangement and operation of the pump(s).

(iii) Special conditions of installation

Reserve flow of the liquid to be measured in the measuring system shall be prevented by a suitable device, unless otherwise approved.

(iv) Sampling device

The measuring system may include a sampling device intended to determine the properties of the liquid to be measured.

It is not necessary to take into account the volume of the sample in the results of the measurement if this sample is less than 0.1 times the maximum permissible error of the measuring system.

(v) Testing devices

Measuring systems in pipelines should be provided with devices allowing verification of the systems in situ. However, this principle may be waived provided that:

- the meters are verified on a control test station with liquids having the same characteristics as those to be measured at the place of installation. The verification is carried out on the measurement transducer only, associated with a compatible and equivalent indicating device, provided that all the elements having a direct mechanical link with the measurement transducer and being able to influence the measurement are verified at the same time,
- the meters benefiting from this exemption shall be subject to periodic calibration controlled and fixed by the metrology service, and
- to complete the verification, the measuring systems concerned shall be subjected to a qualitative check of function and installation, in situ.

Subject to this exemption, the measuring systems shall be constructed so that a standard of appropriate size can be fitted for testing the meters. When a test can only be carried out with the pumps running, which normally does not allow for testing with the meter stopped at the start and at the end of the test, the standard shall be suitable for continuous operation (for example, volume standard with a flow diverting mechanism, pipe prover etc.).

Moreover, these capacities shall represent at least 10,000 scale intervals of the indicating device of the meter to be verified or of the auxiliary indicating device used for the test or 10,000 electrical pulses of the measurement transducer. However, a lower capacity may be permitted if a visual or automatic interpolation allows one to ascertain the indication of the meter with an error smaller than or equal to one per ten thousand of this capacity.

Furthermore, it shall be possible to carry out a metrological test of the associated measuring instruments which may be incorporated and which aim at measuring density, viscosity, pressure and temperature, under actual operating conditions.

(7) Fuel dispensers for liquefied gases under pressure (LPG dispensers)

(i) Requirements in paragraph 5(1)(i), 5(1)(iv)) and 5(1)(vii) to 5(1)(xii) are applicable to LPG dispensers for motor vehicles. However, the ratio between the maximum flowrate and the minimum flowrate shall be at least five by design.

(ii) Requirements in paragraph 5(4)(i), 5(4)(ii), 5(4)(ii)(a), 5(4)(ii)(b), 5(4)(iii), 5(4)(iii)(a) and 5(4)(iii)(b) are applicable to LPG dispensers for motor vehicles.

(iii) The manufacturer or the owner of the measuring system shall provide a thermometer well or an equivalent means for measuring the temperature close to the meter. The thermometer used shall have a scale interval not exceeding 0.5°C and shall be verified.

(iv) Connection between the gas phases of the feed tank and of the vehicle's tank is prohibited.

(v) When only one nozzle can be used during a delivery, and after the nozzle has been replaced, the next delivery shall be inhibited until the indicating device has been reset to zero.

When two or more nozzles can be used simultaneously or alternately, and after the utilized nozzles have been replaced, the next delivery shall be inhibited until the indicating device has been reset to zero.

Moreover, by design, the provisions in the first paragraph of 2(16)(i) shall be fulfilled.

Moreover, in both cases, when the flow is stopped by emergency means and a predetermined delay is exceeded, the current delivery shall be stopped and the next delivery shall be preceded by a reset to zero.

(vi) A non-return valve, located between the gas elimination device and the meter, is mandatory. The pressure loss caused by it shall be sufficiently low to be considered negligible.

(vii) Hoses shall be fitted with special connections for full hoses, so-called couplers or self-sealing valves.

(viii) Safety features shall not affect the metrological performance.

(ix) When the measuring system is provided with a conversion device, it shall be possible to verify separately the indications of volume at measuring conditions and associated measuring instruments.

(x) Closing valves in vapour return lines shall automatically result in stopping the delivery or preventing the start of the next delivery, unless these valves have been sealed in the open position.

(xi) The construction of the nozzle shall be such that, at the moment of coupling or uncoupling, the loss of liquid does not exceed the minimum specified volume deviation.

(8) Measuring systems intended for the refuelling of aircraft

The requirements of this sub-clause also apply to the refuelling of helicopters.

(i) General

(a) Measuring systems intended for refuelling aircraft are full hose measuring systems.

(b) The gas elimination device function may be performed by a microfilter water elimination device provided that provisions in paragraph 2(10) are fulfilled.

(c) They shall be interruptible measuring systems.

(ii) Stationary measuring systems

(a) The requirements applicable to fuel dispensers apply to stationary measuring systems intended for the refuelling of aircraft, except those in paragraph 5(1)(i).

(b) These systems may include their own pumps or be designed for installation in a centrally pumped system.

(c) The microfilter-water elimination device shall be fitted upstream of the gas elimination device when these devices are separate one from another.

(iii) Mobile measuring systems

(a) General

(b) If more than one transfer point is provided, interlocks should prevent the usage of two or more together unless the arrangement is such that it would be difficult to use them on different aircrafts at the same time.

(c) They may be designed for defuelling aircraft provided that the connecting point for defuelling is located upstream of the gas elimination device. A weir-type sight glass is not mandatory.

Interlocks may also be necessary to prevent bypassing metered liquid through the return line back to the supply tank while delivering fuel to the aircraft.

(d) Where the microfilter-water elimination device may be used to perform the function of the gas elimination device, it may be verified by an examination of documents only if provisions in paragraph 2(10) are fulfilled.

(e) Each installation shall be provided with or accompanied by—

- instructions for use,
- a liquid circulation plan,
- a description of necessary operations for use,
- a description of control and connecting devices positions related to their use.

(f) Aircraft refuelling tanker measuring systems

The requirements in paragraphs 5(2)(ii), 5(2)(iii), 5(2)(iv), 5(2)(vi), 5(2)(vii) and 5(2)(viii)(a) apply.

Note : For good practice in the use of the system, when the aircraft refuelling tanker measuring system is fitted with a device used to perform the gas extractor or special gas extractor function, a manometer should be provided upstream of the pump in order to detect depressions when they occur. Its indications should be easily visible by the operator.

(g) Aircraft hydrant measuring systems

(h) The gas elimination device may be a device performing the function of a gas extractor when the underground pipe—

- is designed for easy elimination of the air contained in the pipe with appropriate devices,
- is fitted with special connecting devices for full hoses,
- is supplied so that, in designed supply conditions, no gaseous formation can occur or enter the underground pipe.

(i) When the aircraft hydrant measuring system is equipped with a device for froth recovery and re-injection, it shall be located upstream of the gas elimination device and it shall not permit permanent introduction of gas into the meter.

(j) Depressurization valves for the hoses so that connection and disconnection can be easily made, shall be accompanied with interlocks to prevent metered liquid from being diverted.

(9) Blend dispensers

(i) The requirements in paragraph 5(1)(i) to 5(1)(iv) and 5(1)(vi) to 5(1)(xii) are applicable to both parts of the multigrade-dispenser and to the gasoline part of the gasoline-oil-dispenser. However, by design, the ratio between the maximum flowrate and the minimum flowrate may be at least five in the case of multigrade-dispensers.

(ii) When only one nozzle can be used during a delivery, and after the nozzle has been replaced, the next delivery shall be inhibited until the indicating device has been reset to zero.

When two or more nozzles can be used simultaneously or alternately, and when the utilized nozzles have been replaced, the next delivery shall be inhibited until the indicating device has been reset to zero. Moreover, by design, the provisions in the first paragraph of paragraph 2(16)(i) shall be fulfilled.

(iii) The requirements in paragraph 5(9)(iv) through paragraph 5(9)(viii) do not apply if the designations of the various mixtures do not allow conclusions to be drawn concerning the ratio of volumes of the two components.

Examples for such designations:

- number of stars (2, 3, 4 starts),
- octane-number (92, 95, 98 octane),
- two-stroke-mixture (without designation such as 5%).

Moreover, the requirement in paragraph 5(9)(iv) or 5(9)(v) only applies where the measuring system provides the indication of the mixed volume and the price of the mixture depends on the blending ratio. It does not apply where the measuring system provides—

- an indication of the mixed volume and the price does not depend on the blending ratio, or
- a volume indication for each component of the mixture and does not provide an indication of the mixed volume.

To permit compliance with the requirement in paragraph 5(9)(iv) or paragraph 5(9)(v) to be verified, it is necessary—

- for multigrade-dispensers to measure the volumes of both components,
- for gasoline-oil-dispensers to measure either the volumes of oil and gasoline or the volumes of oil and mixture,
- for both types to make the separate collection of both components feasible during verification.

(iv) The accuracy of the blending ratio for multigrade-dispensers shall be as follows:—

The designations of the various mixtures being indicated as the ratio of volumes of the two components (for example 1:1), the real ratio of the volumes of two components shall be within the limits of ±5%, i.e. the real ratio $k_{real} = V_2/V_1$ of volumes of both components determined during the verification shall be equal to the nominal (indicated) ratio k_{nom}, within the limits:

$k_{min} = k_{nom} - 0.05\ k_{nom}$ and $k_{max} = k_{nom} + 0.05\ k_{nom}$

Examples:

Designation	*3:1*	*1:1*	*1:3*
K_{nom}	0.333	1.00	3.00
K_{min}	0.316	0.95	2.85
K_{max}	0.350	1.05	3.15

(v) The accuracy of the blending ratio for gasoline-oil-dispensers shall be as follows:—

If V_1 is the volume of the minority component in the mixture and V_2 the volume of the majority component, the real volumetric ratio related to the minority component, expressed as a percentage $[T = 100 \times V_1/(V_1+V_2)]$, shall be equal to the nominal ratio within a limit of plus or minus:

- 5% in relative value,
- 0.2% absolute, whichever is greater.

In other words, T being the real volumetric ratio as a percentage, and T_{nom} the nominal volumetric ratio as a percentage, the following must be satisfied:—

$$|T - T_{nom}| / T_{nom} \leq 0.05.$$

if the nominal volumetric ratio is at least 4%, and

$$|T - T_{nom}| \leq 0.02\%.$$

if the nominal volumetric ratio is less than 4 per cent.

(vi) If the blend dispenser is capable of delivering more than one mixture with the same nozzle, the installation of two hoses and a special blending device close to the transfer point is required.

If the blend dispenser can deliver only one mixture per nozzle, the blending device may be installed inside the dispenser, using a single hose per nozzle.

(vii) If the blend dispenser is capable of delivering one or both single components (in addition to the mixtures) with a common nozzle, a device shall prevent the liquid flow through the unused part of the blend device.

(viii) The lubricating oil part of a gasoline-oil-dispenser shall be designed so as to prevent air bubbles in the oil passing through the oil measuring device. There shall also be a device to detect the presence of oil. In the absence of oil, delivery has to be stopped by means, e.g. of:

- an intermediate oil reservoir and a device which stops the delivery when the oil reservoir is empty,
- a pressure detecting device which stops the delivery in the case of an oil pressure drop.

(10) Self-service arrangement with fuel dispensers

The following requirements apply to measuring systems covered by paragraph 5(1), 5(7) or 5(9) when fitted with self-service arrangements.

(i) General requirements

(a) Marking, sealing and connection of the components are left to appropriate authority approving the pattern.

(b) Where the self-service device serves two or more dispensers, each dispenser shall be provided with a dispenser identification number that shall accompany any primary indication provided by the self-service device.

(c) The primary indications on indicating devices and printing devices of the self-service arrangement shall not indicate any mutual differences.

The scale intervals of the primary indication on indicating devices and the printing devices and memory devices of the self-service arrangement shall be the same.

(d) Printing devices on the self-service arrangement shall not reproduce the indications of a dispenser as the difference between two printed values.

(e) Indication of information that is not subject to metrological control is allowed, provided that it cannot be

474 GI/11-139

confused with metrological information.

(f) The control device of the self-service device should be capable of indicating the status of the dispensers (e.g. running, authorized or unauthorized) that are connected to the self-service device and in the case of multiple modes of service and/or type of payment also that particular status of the measuring system.

(g) A change of the type of payment and/or mode of operation shall not be effective before the end of the current measurement operation.

(h) The self-service arrangement, including provisions related to clearly defined methods of operation, shall be such that at least one primary indication for the benefit of the customer must be available at least up to the settlement of the transaction to enable the delivered quantity and the price to pay to be checked.

(i) In the case of a self-service arrangement that totalizes the delivered volumes for different registered customers over the course of time, the minimum measured quantity is not affected by the scale interval used for such totalizations.

(ii) Attended service mode

If the dispenser indicating device provides the only primary indication, provisions shall be made to inform the customer that the next authorization of a particular dispenser can only be given by the supplier after settlement of the current transaction.

(a) Attended post-payment

(b) Where the self-service arrangement includes a device that provides an additional primary indication (additional to those of the indicating device of the dispenser), it shall consist of at least one installation for the reproduction of the volume and/or the price indicated by the dispenser indicating device, consisting of—

- a printing device for the issue of a receipt of the customer, or
- an indicating device for the benefit of the supplier together with a display for the benefit of the customer.

Note: As a consequence of paragraph 3(4)(vii), the reproduction of the volume and price is necessary when the dispenser can be authorized before the settlement of the transaction.

(c) For self-service devices with temporary storage (temporary storage mode) of measurement data of dispensers the following requirements apply:—

(a) temporary storage of measurement data shall be restricted to one delivery for each dispenser,

(b) the primary indication shall be accompanied by a clear mark representing the sequence. For example, the number 1 or 2 or the letter A or B,

(c) when a primary indication of the self-service device is out of service, the self-service arrangement may continue its operation provided that it no longer uses any temporary storage, and that the dispenser indicating device remains the primary indication,

(d) where the mandatory primary indication for the benefit of the customer is provided by a device in the form of a separate constructional unit and this unit becomes uncoupled, or if the checking facilities detect a malfunction, the temporary storage mode shall be prohibited and the dispenser indicating device remains the primary indication,

(e) pre-payment in attended service mode,

(f) the requirements of paragraph 3(6) are applicable,

(g) a printed or hand-written receipt of the pre-paid amount shall be provided.

(iii) Unattended service mode

(a) General

(b) The self-service arrangement shall provide additional primary indications by means of—

- a printing device for the issue of a receipt of the customer, and
- a device (printing or memory device) on which measurement data are registered for the benefit of the supplier.

(c) When the printing devices or memory device, as required by paragraph 5(10)(iii)(b), are not able to provide any indication or become unserviceable, the customer shall be clearly warned by automatic means before the operation commences.

Passing from attended to unattended service mode shall not be possible before correct operation of the arrangement is concluded as feasible by the checking facilities, including compliance with the above provision.

(d) Where the self-service arrangement is used by registered customers, the provisions of paragraph 5(10)(iii)(b) and 5(10)(iii)(c) do not apply to measurements related to such customers. An additional individual volume totalizer is considered to provide a primary indication.

(e) Micro-processors, which upon disturbance or interference influence the measurement operation, shall be equipped with means for controlling the continuity of the processor programme and for ensuring the discontinuation of the current delivery when the continuity of the processor program is no longer ensured.

The next effective acceptance of notes, cards or other equivalent mode of payment shall only take place if the continuity of the processor programme is re-established.

(f) When a power supply failure occurs, the delivery data shall be memorized. The requirements of 5(1)(ix) apply.

(g) Delayed-payment

The printed and/or memorized indications as mentioned in 5.10.3.1 shall contain sufficient information for further checking and at least, the measured quantity, the price to pay and information to identify the particular transaction (e.g. the dispenser number, location, date, time).

(h) Pre-payment in unattended service mode.

(i) Following the termination of each delivery, the printed and/or memorized indications as intended in paragraph 5(10)(iii)(a) shall be made available, clearly indicating the amount which has been pre-paid and the price corresponding to the liquid obtained.

These printed and/or memorized indications may be divided into two parts as follows:—

(a) one part provided prior to the delivery on which the pre-paid amount is shown and recognizable as such,

(b) one part provided following the termination of delivery, provided that it is clear from the information provided on both parts that they are related to the same delivery.

(j) The requirements of 3(6) are applicable.

(11) Other self-service arrangements

Measuring systems, especially those for loading road or rail tankers, may be designed in such a way that the transaction is not settled when the customer leaves the loading site, in implicit agreement with the supplier.

In this case, national or international regulations may prescribe that the self-service arrangement provide additional primary indications by means of—

- a printing device for the issue of a receipt to the customer, and
- a device (printing or memory device) on which measurement data are registered for the benefit of the supplier.

The printed and/or memorized indications shall contain sufficient information for further checking and at least the measured quantity and information to identify the particular transaction (e.g. the system number, location, date, time).

Moreover, after a delivery, measuring systems shall not be capable of being reset to zero and authorized until measurement data are memorized or printed out.

6. Metrological control

When a test is conducted, the expanded uncertainty of the determination of errors on indications of volume or mass shall be less than one-fifth of the maximum permissible error applicable for that test on pattern approval and one-third of the maximum permissible error applicable for that test on other verifications.

(1) Pattern approval

(i) General

Measuring systems subject to legal metrology control shall be subject to pattern approval. In addition, the constituent elements of a measuring system, mainly those listed below, and the sub-systems which include several of these elements, may be subject to separate pattern approval:

- meter,
- transducer,
- gas separator,
- gas extractor,
- special gas extractor,
- electronic calculator (including the indicating device),
- conversion device,
- ancillary devices providing or memorizing measurements results,
- pre-setting device,
- densitometer,
- temperature sensor.

The constituent elements of a measuring system shall comply with the relevant requirements even when they have not been subject to separate pattern approval (except, of course, in the case of ancillary devices that are exempted from the controls).

Unless otherwise specified in this Recommendation, a measuring system should fulfil the requirements without adjustment of the system or of its devices during the course of the tests. If an adjustment is carried out, this condition shall still be considered as valid.

(ii) Documentation

(a) The application for pattern approval of a measuring system or of a constituent element of a measuring system shall include the following documents :—

- a description giving the technical characteristics and the principle of operation,
- a drawing or photograph,
- a list of the components with a description of their constituent materials when this has a metrological influence,
- an assembly drawing with identification of different components,
- for measuring systems, the references of the approval certificate of the constituent elements, if any,
- for measuring systems and meters fitted with correction devices, a description of how the correction parameters are determined,
- a drawing showing the location of seals and verification marks,
- a drawing of regulatory markings.

(b) In addition, the application for pattern approval of an electronic measuring system shall include—

- a functional description of the various electronic devices,
- a flow diagram of the logic, showing the functions of the electronic devices,
- any document or evidence which shows that the design and construction of the electronic measuring system comply with the requirements of this specification in particular paragraph 4(3).

(c) The applicant shall provide the body responsible for the evaluation with an instrument representative of the final pattern.

Other specimens of the pattern may be considered necessary by the body responsible for the pattern evaluation to estimate the reproducibility of the measurements.

(iii) Pattern approval certificate

The following information shall appear on the pattern approval certificate :—

- name and address of the recipient of the approval certificate,
- name and address of the manufacturer, if it is not the recipient,
- type and/or commercial designation,
- principal metrological and technical characteristics,
- pattern approval mark,
- period of validity,
- environmental classification, if applicable,
- information on the location of marks for pattern approval, initial verification and sealing (e.g. picture or drawing),
- list of documents accompanying the pattern approval certificate,
- specific remarks.

When applicable, the version of the metrological part of the evaluated software shall be indicated in the pattern approval certificate or in its annexes.

(iv) Modification of an approved pattern

(a) The recipient of the pattern approval shall inform the body responsible for the approval of any modification or addition which concerns an approved pattern.

(b) Modifications and additions shall be subject to a supplementary pattern approval when they influence, or are likely to influence, the measurement results or the instrument's regulatory conditions of use.

The body having approved the initial pattern shall decide to which extent the examinations and tests described below shall be carried out on the modified pattern in relation with the nature of the modification.

(c) When the body having approved the initial pattern judges that the modifications or additions are not likely to influence the measurement results, this body allows the modified instruments to be presented for initial verification without granting a supplementary pattern approval.

A new or supplementary pattern approval must be issued whenever the modified pattern no longer fulfils the provisions of the initial pattern approval.

(v) Pattern approval of a meter or of a measurement transducer

(a) A pattern approval may be given for a complete meter; it may also be given for the measurement transducer only when this is intended to be connected to different types of calculators.

The following examinations and tests shall be carried out on the meter alone or on the measurement transducer when it is the subject of a separate application for pattern approval. They may also be carried out on the whole measuring system.

Tests are normally carried out on the complete meter, fitted with an indicating device, with all the ancillary devices and with the correction device, if any. However, the meter subject to testing need not be fitted with its ancillary devices when the latter are not likely to influence the accuracy of the meter and when they have been verified separately (for example : electronic printing device). The measurement transducer may also be tested alone provided that the computing and indicating device has been subject to a separate pattern approval. If this measurement transducer is intended to be connected to a calculator fitted with a correction device, the correction algorithm as described by the manufacturer must be applied to the output signal of the transducer to determine its errors.

(b) Accuracy tests

(c) The errors of the meter shall be determined at a minimum of six

flowrates which are distributed over the measuring range at regular intervals. At each flowrate the errors shall be determined at least three times, independently. Each error shall not be greater than the maximum permissible error (in absolute value). In addition, for quantities equal to or greater than five times the minimum measured quantity, the repeatability requirement in paragraph 3(1)(ii)(b) applies.

(d) Tests should be carried out at the limits of the field of operation, i.e. at the limits of pressure, temperature and viscosity. However, pressure tests are not necessary when the technology of the meter is such that it is possible to calculate the influence of pressure and to show that it is negligible (for example: meter with pressure-balanced measuring chambers).

Note : *It is often unnecessary to* carry out tests with liquids having a temperature which differs from the ambient temperature when the meter is intended to measure liquids having a temperature between – 10°C and +50°C.

(e) The following tests shall also be carried out:—

- accuracy test at minimum measured quantity,
- determination of the periodic variation, if appropriate,
- tests with flow disturbances, if appropriate.

For tests with flow disturbances, the applicable maximum permissible errors are those fixed in paragraph 2(5) for the measuring system and not those fixed in paragraph 3(1)(ii) for the meter.

(f) When preliminary verification of the meter is planned to be carried out with a liquid which differs from the liquid the meter is intended to measure, comparative tests with these two liquids shall also be carried out to determine the maximum permissible errors on preliminary verification. It may be necessary to have several specimen of the pattern available.

Example : It is necessary to make a distinction between a pattern of a meter intended to measure several products (in the same measuring system) and a pattern of a meter of which different copies may be used for measuring different products (in different measuring systems), each copy being intended to measure a given product only.

For example, meter A may be intended to measure butane and propane alternatively, whereas meter B is intended to measure either butane or propane. Both meters will be subject to accuracy tests with butane and with propane at the time of pattern approval. For meter A, the error curves for propane and for butane shall both be within the maximum permissible errors as specified in paragraph 3(1)(ii).

For meter B, the error curves for butane on the one hand, and for propane on the other hand, shall satisfy the maximum permissible errors; unlike meter A, however, these error curves may be determined using different copies of the meter, or alternatively on the same copy whose adjustment (or correction parameters) has been modified between the test with butane and the test with propane.

Copies of meter A will bear the mention of butane and propane on their data plate and they may also be used to measure mixtures of butane and propane in any proportion.

Copies of meter B will bear either the mention "butane" or the mention "propane" and shall be used for measuring the corresponding product exclusively.

The preliminary verification of pattern A copies may be carried out with either butane or propane, indifferently (with, if appropriate, a reduction of the maximum permissible errors range).

In general, the preliminary verification of pattern B copies will be carried out with the liquid intended to be measured; however, it may be carried out with the other liquid provided that the maximum permissible errors have been shifted. The value of shifting shall be determined at the time of pattern evaluation by evaluating the deviation between the error curves determined with butane and with propane, on the same meter, without modification of the adjustment. The deviations shall be reproducible from one copy of the meter to another. To check this, it is necessary to carry out accuracy tests on several instruments.

(g) Endurance tests

Endurance tests should be carried out at the maximum flowrate of the meter using the liquid the meter is intended to measure or a liquid with similar characteristics. When the meter is intended to measure different liquids, the test should be carried out with the liquid that provides the most severe conditions.

An accuracy test shall precede the endurance tests.

In principle the duration of the endurance test shall be 100 hours in one or several periods. In specific cases (e.g. new technologies, new alloys, new liquids) the duration may be increased up to 200 hours.

The test shall be carried out at a flow rate between 0.8 x Q_{max} and Q_{max}.

As far as possible, the meter is subjected to the endurance test on a test bench. However, it is accepted that the meter be temporarily mounted in a measuring system in normal operation, in which case it is necessary that the nominal operating flowrate of the measuring system is more than 0.8 x Q_{max}.

After the endurance test, the meter is again subject to a new accuracy test. The deviations between the errors determined before and after the endurance test shall remain within the limits specified in paragraph 3(1)(ii)(c) without any changes of the adjustment or corrections.

(vi) Pattern approval of a gas elimination device

As a rule, tests shall be carried out to prove that the air or gas eliminating devices satisfy the requirements in paragraph 2 (10)(viii) or 2(10)(ix).

It is however acceptable that tests are not carried out at flowrates greater than 100 m^3/h and that the air separating devices are approved by analogy with devices of the same design, having smaller dimensions.

Annexure B describes tests which should be carried out on these devices. The tests are given as examples only.

(vii) Pattern approval of an electronic calculator

When an electronic calculator is submitted to separate pattern approval, pattern approval tests are conducted on the calculator alone, simulating different inputs with appropriate standards.

(a) Accuracy tests include an accuracy test on the indications of measurement results (volume at metering conditions or price to pay). For this purpose, the error obtained on the indication of the result is calculated considering the true value is the one calculated taking into account the value of the simulated quantities applied to inputs of the calculator and using standard methods for calculation. The maximum permissible errors are those fixed in paragraph 2(8).

(b) When the calculator carries out calculations for a conversion device, tests specified in paragraph 6(1)(vii)(a) are performed for the calculation of volume at base conditions or mass.

Accuracy tests also include an accuracy test on the measurement of each characteristic quantity of the liquid. For this purpose, the error obtained on the indication of each of these characteristic quantities these indications are mandatory considering paragraph 3(7)(vii) is calculated by considering the true value as that provided by the standard connected to the inputs of the calculator and which simulates the corresponding associated measuring instrument. For each of

these quantities, the maximum permissible errors fixed in paragraph 2(7)(iii) shall be applied.

It is then necessary to perform a test to check the presence and operation of checking facilities relevant to associated measuring instruments mentioned in paragraph 4(3)(vi).

(c) Examinations and tests described in 6(1)(xi) for electronic instruments shall be performed.

(viii) Pattern approval of a conversion device

(a) General case

It is necessary to verify whether the conversion device connected to all its associated measuring instruments complies with provisions in 2(7)(i). For that purpose, the volume at metering conditions which is converted is supposed to be without any error.

It may also be verified that the provisions in paragraph 2(7)(vi) [and paragraph 2(7)(v) if applicable] are fulfilled.

In the case of an electronic conversion device, the tests and examination described in paragraph 6(1)(ix) shall be performed.

(b) Electronic conversion device

Instead of the procedure in paragraph 6(1)(viii)(a), it is also possible—

- to verify separately the accuracy of associated measuring instruments [see paragraph 2(7)(ii)],
- to verify that the provisions in paragraph 6(1)(vii)(b) are fulfilled, and
- to perform examinations and tests described in paragraph 6(1)(xi).

(ix) Pattern approval of an ancillary device

(a) When an ancillary device that provides primary indications is intended to be approved separately, its indications shall be compared with those provided by an indicating device that has already been approved and which has the same scale interval, or a smaller one.

The results shall satisfy the provisions in paragraph 2(9)(v).

As far as possible, the necessary conditions for compatibility with other devices of a measuring system are stated in the pattern approval certificate.

(b) Electronic devices may be approval separately when they are used for the transmission of primary indications or other information necessary for their determination, e.g. a device which concentrates information from two or more calculators and transmits it to a single printing device.

When at least one of the signals of this information is analogue, the device shall be tested in association with another device whose maximum permissible errors are provided by this Recommendation.

When all the signals of this information are digital, the above provision may be applied; however, when the inputs and outputs of the device are available, the device can be tested separately, in which case it shall introduce no error; only errors due to the testing method may be found out.

In both cases and as far as possible, the necessary conditions for compatibility with other devices of a measuring system are stated in the pattern approval certificate.

(x) Pattern approval of a measuring system

The pattern approval of a measuring system consists of verifying that the constituent elements of the system, which have not been subject to separate pattern approvals, satisfy the applicable requirements, and that these constituent elements are compatible with one another.

Tests for carrying out the pattern approval of a measuring system shall therefore be determined on the basis of the pattern approvals already granted for the constituent elements of the system.

When none of the constituent elements has been subject to separate pattern approval, all the tests provided for in paragraph

6(1)(v), 6(1)(vi) and 6(1)(vii) (in particular) shall be performed on the complete measuring system. On the contrary, when the various constituent elements are all approved separately, it is possible to replace pattern approval based on tests by pattern approval of drawings.

It is also appropriate to reduce the pattern evaluation program when the measuring system includes constituent elements identical to those which equip another measuring system that has already been approved, and when the operating conditions of these elements are identical. For example, it is not necessary to perform the expansion test of a hose in a fuel dispenser when the hose in this measuring system is identical to the hose equipping another measuring system already approved with the same minimum measured quantity.

Note : It is advisable that constituent elements be subject to separate pattern approval when they are intended to equip several patterns of measuring systems. This is particularly advisable when the various measuring systems have different manufacturers and when the bodies in charge of pattern approval are different.

(xi) Pattern approval of an electronic device

In addition to the examinations or tests described in the preceding paragraphs, an electronic measuring system or an electronic constituent element of this system shall been subject to the following tests and examinations:—

(a) Design inspection

This examination of documents aims at verifying that the design of electronic devices and their checking facilities comply with the provisions of this specification, clause 4 in particular.

It includes—

(a) an examination of the mode of construction and of the electronic sub-systems and components used, to verify their appropriateness for their intended use,

(b) consideration of faults likely to occur, to verify that in all considered cases these devices comply with the provisions of paragraph 4(3),

(c) verification of the presence and effectiveness of the test device(s) for the checking facilities.

(b) Performance tests

These tests aim at verifying that the measuring system complies with the provisions of paragraph 4(1)(i) with regard to influence quantities. These tests are specified in Annexure A.

(a) Performance under the effect of influence factors:

When subjected to the effect of influence factors as provided for in Annexure A, the equipment shall continue to operate correctly and the errors shall not exceed the applicable maximum permissible errors.

(b) Performance under the effect of disturbances:

When subjected to external disturbances as provided for in Annexure A, the equipment shall either continue to operate correctly or detect and indicate the presence of any significant faults. Significant faults shall not occur on non-interruptible measuring systems.

(c) Equipment under test (EUT)

Tests are carried out on the complete measuring system where size and configuration permit, except where otherwise specified in Annexure A.

Where tests are not carried out on a complete system, they shall be carried out on a sub-system comprising at least the following devices:—

- measuring transducer,
- calculator,
- indicating device,
- power supply device,
- correction device, if appropriate.

This sub-system shall be included in a simulation set-up

4784 GI/11—141

representative of the normal operation of the measuring system. For example, the movement of the liquid may be simulated by an appropriate device.

The calculator shall be in its final housing.

In all cases, peripheral equipment may be tested separately.

(2) Initial verification

(i) General

Initial verification of a measuring system is carried out in a single stage when the system can be transported without dismantling and when it is verified under the intended conditions of use; in all other cases, it is carried out in two stages.

The first stage concerns at least the measurement transducer, alone or fitted with associated ancillary devices, or possibly included in a sub-system. Tests of the first stage may be carried out on a test bench, possibly in the factory of the manufacturer, or on the installed measuring system. At this stage, the metrological examinations may be carried out with different liquids than those which the system is intended to measure.

The first stage also concerns the calculator and the density sensor. If necessary, the measurement transducer and the calculator can be verified separately.

The second stage concerns the measuring system in actual working condition. It is carried out at the place of installation under operating conditions and with the intended liquid of use. However, the second stage may be carried out in a place chosen by the verification body when the measuring system can be transported without dismantling and when the tests can be performed under the operating conditions intended for the measuring system.

Initial verification of electronic systems shall include a procedure for verifying the presence and correct operation of checking facilities by the use of test devices as specified in paragraph 4(3).

(ii) Tests

(a) When initial verification takes place in two stages, the first stage shall include—

- an examination for conformity of the meter, including the associated ancillary devices (conformity with the respective patterns),
- a metrological examination of the meter, including the associated ancillary devices.

The second stage shall include—

- an examination for conformity of the measuring system, including the meter and the ancillary and additional devices,
- a metrological examination of the measuring system; if possible, this examination is carried out within the limits of operating conditions for the system,
- an operational test of the gas elimination device, where appropriate, with no need to verify that the maximum errors applicable to this device and specified in 2.10 are met,
- an inspection of the adjustment of the prescribed pressure maintaining devices where appropriate,
- when necessary, a test of the variations of the internal volume of the hoses in full hose measuring systems, e.g. in the case of a hose reel, an operational test of the control valve preventing the emptying of the hose during non-operating periods, for full hose measuring systems,
- a determination of the residual quantities in empty hose measuring systems.

(b) When initial verification takes place in one stage, all tests in paragraph 6(2)(ii)(a) shall be performed.

(3) Subsequent verification

(i) Subsequent verification of a measuring system may be identical to initial verification.

(ii) The preliminary examination of the meter should only be repeated if the protective marks on the measuring element of the meter have been damaged. This examination may be replaced by a test of the measuring system if the conditions for the preliminary examination are met and if the measuring system can undergo testing with a volume of liquid corresponding to the minimum measured quantity. For the determination of the error curve, at least 60% of the maximum flowrate should be reached.

(iii) The ancillary devices shall be considered as having been subjected to the preliminary examination if the protective marks are not damaged. It is sufficient to carry out a reduced number of measurements during the simplified examination of the ancillary devices.

ANNEXURE A.

PERFORMANCE TEST FOR ELECTRONIC MEASURING SYSTEMS.

(*Mandatory*).

1. General

This Annexure defines the program of performance tests intended to verify that electronic measuring systems may perform and function as intended in a specified environment and under specified conditions. Each test indicates, where appropriate, the reference conditions for determining the intrinsic error.

These tests supplement any other prescribed test.

When the effect of one influence quantity is being evaluated, all other influence quantities are to be held relatively constant, at values close to reference conditions.

2. Severity levels

For each performance test, typical test conditions are indicated: they correspond to the climatic and mechanical environment conditions to which measuring systems are usually exposed.

Measuring systems are divided into three classes according to climatic and mechanical environmental conditions:

- Class B for fixed instruments installed in a building,
- Class C for fixed instruments installed outdoors,
- Class I for mobile instruments, in particular measuring systems on trucks.

However, the applicant for pattern approval may indicate specific environmental conditions in the documentation supplied to the metrology service, based on the intended use of the instrument. In this case, the metrology service carries out performance tests at severity levels corresponding to these environmental conditions. If pattern approval is granted, the data plate shall indicate the corresponding limits of use. Manufacturers shall inform potential users of the conditions of use for which the instrument is approved. The metrology service shall verify that the conditions of use are met.

3. Reference conditions

Ambient temperature	: 20°C ± 5°C
Relative humidity	: 60% ± 15%
Atmospheric pressure	: 86 kPa to 106 kPa
Power voltage	: Nominal voltage (V_{nom})
Power frequency	: Nominal frequency (F_{nom})

During each test, the temperature and relative humidity shall not vary by more than 5°C or 10% respectively within the reference range.

4. Performance tests

The following tests can be carried out in any order:—

Test	*Nature of the influence quantity*	*Severity level for the class*		
		B	*C*	*I*
1. Dry heat	Influence factor	2	3	3
2. Cold	Influence factor	2	3	3
3. Damp heat, cyclic	Influence factor	1	2	2
4. Vibration (sinusoidal)	Influence factor	–	–	3
5. Power voltage variation	Influence factor	1	1	1
6. Short time power reductions	Disturbance	1a & 1b	1a & 1b	1a & 1b
7. Bursts	Disturbance	2	2	2
8. Electrostatic discharge	Disturbance	1	1	1
9. Electromagnetic susceptibility	Disturbance	2, 5, 7	2, 5, 7	2, 5, 7
10. Disturbances on d.c. voltage powered equipment				

The above tests involve the electronic part of the measuring system or its devices.

The following rules shall be taken into consideration for these tests:—

(i) Tests volumes

Some influence quantities should have a constant effect on measurement results and not a proportional effect related to the measured volume. The value of the significant fault is related to the measured volume; therefore, in order to be able to compare results obtained in different laboratories, it is necessary to perform a test on a volume corresponding to that delivered in one minute at the maximum flowrate, but not less than the minimum measured quantity. Some tests, however, may require more than one minute, in which case they shall be carried out in the shortest possible time.

(ii) Influence of the liquid temperature

Temperature tests concern the ambient temperature and not the temperature of the liquid used. It is therefore advisable to use a simulation test method so that the temperature of the liquid does not influence the test results.

(1) Dry heat

Test method:	Dry heat (non-condensing)
Object of the test:	To verify compliance with the provisions in paragraph 4(1)(i) under conditions of high temperature.
Test procedure in brief:	The test consists of exposure of the EUT to a temperature of 55°C (classes C or I) or 40°C (class B) under "free air" conditions for a 2-hour period after the EUT has reached temperature stability. The EUT shall be tested at least one flowrate (or simulated flowrate): · at the reference temperature of 20°C following conditioning, · at the temperature of 55°C or 40°C, 2 hours after temperature stabilization, · after recovery of the EUT at the reference temperature of 20°C.
Test severities:	(1) Temperature : severity level 2: 40°C severity level 3: 55°C (2) Duration : 2 hours
Number of test Cycles:	One cycle
Maximum allowable variations:	All functions shall operate as designed. All errors shall be within the maximum permissible errors.

(2) Cold

Test method:	Cold
Object of the test:	To verify compliance with the provisions in paragraph 4(1)(i) under conditions of low temperature.
Test procedure in brief:	The test consists of exposure of EUT to a temperature of–25°C (classes C or I) or –10°C (class B) under "free air" conditions for a 2-hour period after the EUT has reached temperature stability. The EUT shall be tested at least one flowrate (or simulated flow rate): · at the reference temperature of 20°C following conditioning, · at a temperature of -25°C or -10°C, 2 hours after temperature stabilization, · after recovery of the EUT at the reference temperature of 20°C.
Test severities:	(1) Temperature : severity level 2: -10°C severity level 3: -25°C (2) Duration : 2 hours
Number of test cycles:	One cycle
Maximum allowable variations:	All functions shall operate as designed. All errors shall be within the maximum permissible errors.

(3) Damp heat, cyclic

Test method:	Damp heat, cyclic (condensing)
Object of the test:	To verify compliance with the provisions in 4.1.1 under conditions of high humidity when combined with cyclic temperature changes.
Test procedure in brief:	The test consists of exposure

of the EUT to cyclic temperature variations between, 25°C and the upper temperature of 55°C (class C or I) or 40°C (class B), maintaining the relative humidity above 95% during the temperature changes and during the phases at low temperature, and at 93% at the upper temperature phases. Condensation should occur on the EUT during the temperature rise. Standard stabilizing period before and recovery after the cyclic exposure are indicated in IEC Publication 68-2-30. The power supply is not on when the influence factor is applied.

Test severities: (1) Upper temperature: severity level 1: 40°C severity level 2: 55°C

(2) Humidity : > 93%

(3) Duration: 24 hours

Number of test cycles: Two cycles

Maximum allowable variations : After the application of the influence factor and recovery:

- all functions shall operate as designed, and
- all errors shall be within the maximum permissible errors.

(4) Vibration

Test method : Sinusoidal vibration

Object of the test: To verify compliance with the provisions in paragraph 4(1)(i) under conditions of sinusoidal vibration.

This test should normally apply to mobile measuring systems only.

Test procedure in brief: The EUT shall be tested by sweeping the frequency in the specified frequency range, at 1 octave/minute, at the specified acceleration level with a specified number of sweep cycles per axis. The EUT shall be tested in its three, mutually perpendicular main axes, mounted on a rigid fixture by its normal mounting means. It shall normally be mounted so that the gravitational force acts in the same direction as it would in normal use.

The instrument is non-operational when the influence factor is applied.

Test severities: (1) Frequency range: 10-150 Hz

(2) Max. acceleration level : 20 $m.s^{-2}$

Number of test cycles: 20 sweep cycles per axis

Maximum allowable variations: After the application of the influence factor and recovery:

- all functions shall operate as designed and
- all errors shall be within the maximum permissible errors.

(5) Power voltage variation

Test method: Variation in a.c. mains power supply (single phase)

Object of the test: To verify compliance with the provisions in paragraph 4(1)(i) under conditions of varying a.c. mains power supply.

Test procedure in brief: The test consists of exposure of the EUT to power voltage variations, while the EUT is operating under normal atmospheric conditions.

Test severities: Main voltage : upper limit : V_{nom} +10%
lower limit : V_{nom} −15%

Number of test cycles: One cycle

Maximum allowable variations: All functions shall operate as designed.

All errors shall be within the maximum permissible errors.

(6) Short time power reduction

Test method: Short time interruptions and reductions in mains voltage.

Object of the test: To verify compliance with the provisions in paragraph 4(1)(i) under conditions of short time mains voltage interruptions and reductions.

Test procedure in brief: The test consists of subjecting the EUT to voltage interruptions from nominal voltage to zero voltage for a duration equal to half a cycle

474 GI/11 — 142

of line frequency, and reductions from nominal voltage to 50% of nominal for a duration equal to one cycle of line frequency. The mains voltage interruptions and reductions shall be repeated ten times with a time interval of at least ten seconds.

Test severities: 100% voltage interruption for a period equal to half a cycle. 50% voltage reduction for a period equal to one cycle.

Number of test cycles: At least ten interruptions and ten reductions, each with a minimum of ten seconds between tests.

The interruptions and reductions are repeated throughout the time necessary to perform the whole test; for this reason, more than ten interruptions and reductions may be necessary.

Maximum allowable variations: (a) For interruptible measuring systems, either the difference between the volume indication during the test and the indication under reference conditions shall not exceed the values given in paragraph 3(12) part-I or the measuring system shall detect and act upon a significant fault, in compliance with paragraph 4(3)(i).

(b) For non-interruptible measuring systems, the difference between the volume indication during the test and the indication under reference conditions shall not exceed the values given in paragraph 3(12) part-I.

(7) Bursts

Test method: Electrical bursts

Object of the test: To verify compliance with the provisions in paragraph 4(1)(i) under conditions where electrical bursts are superimposed on the mains voltage.

Test procedure in brief: The test consists of subjecting the EUT to bursts of double exponential waveform transient voltages. Each spike shall have a rise time of 5 ns and a half amplitude duration of 50 ns. The burst length shall be 15 ms, the burst period (repetition time interval) shall be 300 ms. All bursts shall be applied during the same measurement or simulated measurement in symmetrical mode and asymmetrical mode.

Test severities : Amplitude (peak value) 1000 V

Number of test cycles: At least ten positive and ten negative randomly phased bursts shall be applied at 1000 V.

The bursts are applied during all the time necessary to perform the test; to that purpose more bursts than indicated above may be necessary.

Maximum allowable variations: (a) For interruptible measuring systems, either the difference between the volume indication during the test and the indication under reference conditions shall not exceed the values given in paragraph 3(12) part-I or the measuring system shall detect and act upon a significant fault, in compliance with paragraph 4(3)(i).

(b) For non-interruptible measuring systems, the difference between the volume indication during the test and the indication under reference conditions shall not exceed the values given in paragraph 3(12) part-I.

(8) Electrostatic discharge

Test method: Electrostatic discharge (ESD)

Object of the test: To verify compliance with the provisions in paragraph 4(1)(l) under conditions of direct and indirect electrostatic discharges.

Test procedure in brief: A capacitor of 150 pF is charged by a suitable DC voltage source. The capacitor is then discharged through the EUT by connecting one terminal to ground (chassis)

and the other via 330 ohms to surfaces which are normally accessible to the operator.

The test includes the paint penetration method, if appropriate. For direct discharges the air discharge shall be used where the contact discharge method cannot be applied.

Test severities: 8 kV for air discharges

6 kV for contact discharges

Number of test cycles: At each test point, at least ten direct discharges shall be applied at intervals of at least ten seconds between discharges, during the same measurement or simulated measurement. As for indirect discharges, a total of ten discharges shall be applied on the horizontal coupling plane, and a total of ten discharges for the various positions of the vertical coupling plane.

Maximum allowable variations: (a) For interruptible measuring systems, either the difference between the volume indication during the test and the indication under reference conditions shall not exceed the values given in paragraph 3(12) of part-I or the measuring system shall detect and act upon a significant fault, in compliance with paragraph 4(3)(i).

(b) For non-interruptible measuring systems, the difference between the volume indication during the test and the indication under reference conditions shall not exceed the values given in paragraph 3(12) of part-I.

(9) Electromagnetic susceptibility

Test method: Electromagnetic fields (radiated)

Object of the test: To verify compliance with the provisions in paragraph 4(1)(i) under conditions of electromagnetic fields.

Test procedure in brief: The EUT shall be exposed to electromagnetic field strength as specified by the severity level.

The field strength can be generated in various ways:

- the strip line is used at low frequencies below 30 MHz (or in some cases 150 MHz) for small EUTs;
- the long wire is used at low frequencies (below 30 MHz) for larger EUTs;
- dipole antennas or antennas with circular polarization placed 1 m from the EUT are used at high frequencies.

The specified filed strength shall be established prior to the actual testing (without EUT in the field).

The field shall be generated in two orthogonal polarizations and the frequency range shall be scanned slowly. If antennas with circular polarization i.e. log-spiral or helical antennas are used to generate the electromagnetic field, a change in the position of the antennas is not required.

When the test is carried out in a shielded enclosure to comply with international laws prohibiting interference to radio communications, care should be taken to handle reflections from the walls. Anechoic shielding may be necessary.

Test severities:

Frequency range	26-500 MHz	500-1000 MHz
Field strength	3 V/m	1 V/m
Modulation	80% AM 1kHz sine wave	

Maximum allowable variations: (a) For interruptible measuring systems, either the difference between the volume indication during the test and the indication under reference conditions shall not exceed the values given in paragraph 3(12) of part-I or the measuring system shall detect and act upon a significant fault, in

compliance with paragraph 4(3)(i).

(b) For non-interruptible measuring systems, the difference between the volume indication during the test and the indication under reference conditions shall not exceed the values given in paragraph 3(12) of part I.

(10) Perturbations on dc voltage powered instruments

Electronic measuring systems supplied with dc voltage shall fulfil the tests in Annexure A 4(1) to Annexure A, paragraph 4(9), with the exception of Annexure A, paragraph 4(5), 4(6) and 4(7) which are to be replaced by the following provisions:—

General provision

For under-voltages or over-voltages all errors shall be within maximum permissible errors when the instrument is still operating.

The under-voltage or over-voltage is applied for a complete measurement or part of a measurement.

Provision applicable to instruments fed by the battery of a vehicle

Tests pulses 1, 2 and 3 of the relevant part of ISO 7637 *Electrical disturbance by conduction and coupling,* Part 1: *Vehicles with nominal 12 V supply voltage,* and Part 2: *Commercial vehicles with nominal 24 V supply voltage,* are applied at the various severity levels specified in this Standard.

Pulses are repeated for as long as necessary to complete the test.

The pattern approval certificate shall indicate, for each type of pulse, the maximum severity level met by the instrument.

ANNEXURE B

TESTING OF GAS ELIMINATION DEVICES

(*Informative*)

1. Testing of a gas elimination device as a unit separate from the measuring system for which it is intended

(1) General provisions

In order to examine whether the pattern of a gas elimination device complies with the requirements in, paragraph 2(10), a specimen of the pattern must be installed on a suitable test bench equipped with a meter and a conventional proving tank.

Note: In tests on gas elimination devices, the proving tank may be replaced by any appropriate standard.

The efficiency of the gas elimination device is determined with reference to the meter error at the same flowrate.

The test bench must, as far as possible, comply with the following provisions:—

(i) The capacity of the proving tank should be at least equal to the greater of the following two values: volume delivered in one minute at maximum flowrate, or 1000 times the scale interval of the meter of the test bench.

(ii) It is recommended that an adjustable non-return valve be installed downstream of the meter in order to prevent back flow of the liquid which has been measured and to obtain the minimum back pressure required for the proper operation of the gas elimination device.

(iii) There should be no reverse gradient in the pipework downstream of the meter so that gas bubbles are allowed to escape in the normal way in order to keep this pipework filled to the same level at the beginning and end of the test.

(iv) The liquid used for the tests should either be the same as that for which the device is intended or should be of a viscosity which is at least equal to that of the liquid for which it is intended.

Tests on gas elimination devices should be carried out for flowrates up to a maximum of 100 m^3/h. For higher flowrates, characteristics may be determined by analogy with equipment of the same design and smaller dimensions. "By analogy" means that parameters like Reynolds number, Froude number, etc., are to be taken into account for the gas elimination device.

(2) Tests on gas separators

The volume of air or gas continuously entering may be measured by a gas meter and isothermally converted to atmospheric pressure on the basis of the indication of a pressure gauge fitted upstream of the gas meter.

A pressure gauge positioned upstream of the meter for liquid makes it possible to determine the lowest pressure at which the gas separator still meets the efficiency requirements.

Before starting a test, the whole apparatus is made to operate at the desired liquid and gas flowrates so that all parts of the apparatus (except the proving tank) fill up under set conditions as regards the entry of air or gas.

The air may be introduced either by injection downstream of the pump or by suction upstream of it (see Figures 1, 2 and 3, which are given as examples).

In the former case, which makes it possible to operate without changing the performance of the pump due to the entry of air, the liquid and gas flows are adjusted by means of control valves. The air or gas is introduced through a tube positioned in the centre of the pipework for the liquid, for example at an elbow.

In the latter case, which reproduces the conditions encountered in reality (pressure reduction by suction), the pump must be set to the maximum flowrate of the separator. If the pump has too great a flowrate, it must be possible to regulate it with a speed reducer. The pump should preferably be of the volumetric type but it may also be of the centrifugal type if the supply tank feeds the pump by gravity. The pressure reduction must then be regulated by a valve positioned upstream of the pump, and the air inlet must be equipped with a non-return valve which prevents any leakage at the movement of switching off.

(3) Test on gas extractors

An example of test bench is shown in Figure 4.

It includes a container for creating a pocket of air to be removed with a volume equal to the minimum measured quantity of the gas extractor (the minimum measured quantity of the system being not yet specified). When the test is carried out with a proving tank having such a great capacity that the maximum permissible error cannot be evaluated correctly on the basis of a single operation of the gas extractor, the number of operations during the same test shall be multiplied by 2, 3 or 4, to obtain the required accuracy.

(4) Tests on special gas extractors

Special gas extractors, mainly used for measuring systems on road tankers, are principally intended to prevent measurement errors which may arise from the complete emptying of one compartment. They must also separate and continuously remove introduced air, although to a lesser degree than a gas separator.

In the case of separate approval, they should be tested on a test bench which corresponds in principle to Figure 5.

This test bench is similar to that in Figure 1 but it differs in order to reproduce the actual conditions of delivery from road tankers to underground tanks, as is the case when service stations are supplied with petrol, and domestic fuel oil deliveries are made. Thus, the supply tank is located above the special gas extractor and the meter, i.e. at a level corresponding to that of road tanker, and the proving tank is approximately 4 m below the meter.

In order to determine the additional error arising from the complete emptying of a road tanker, which may be caused by the air drawn in at the end of the delivery by the formation of a vortex, the supply tank is filled with a volume of liquid equivalent to that of the proving tank. The liquid is then emptied through the meter into the proving tank without operating the shut-off valve.

For delivery by gravity, pipework is used which bypasses the pump.

Due to the existence of the automatic shut-off valve in the hydraulic circuit connected to the gas extractor, the pocket of air to be evacuated (described in Annexure-B, paragraph 1(3)) may be created by emptying the pipework between the tank and the gas extractor.

Furthermore, given that a special elimination device should also perform the function of a separator for a small percentage of air introduced continuously it is necessary to carry out this test in a manner comparable to the tests described for separators in Annexure-B, 1(2), with air being either injected into the supply pipework or drawn in upstream of the pump by creating an entry of air and partly closing the valve of the supply tank.

2. Tests on gas elimination devices forming part of a measuring system during pattern approval

The tests are carried out with a proving tank of the capacity specified in Annexure B, paragraph 1(1) or any appropriate standard.

(1) Tests on a gas separator

This examination particularly applies to patterns of separators included in measuring systems which can be mass produced and transported without dismantling, such as petrol pump fed by their own supply pumps.

The essential part of the test bench (Figure 6) is the measuring system itself (in this case, the fuel dispenser).

In accordance with conditions encountered in actual use, the liquid is drawn up from a

474 40/11—143

tank on a lower level than the meter. The air is drawn in by suction through a special inlet equipped with a control valve. The air can be measured by a gas meter. However, it is not necessary to use a gas meter if the separator is capable of separating and eliminating the air introduced in any proportion, as provided in, paragraph 2(10)(viii).

The requirements in, paragraph 2(10)(i) and 2(10)(viii) should be complied with under test conditions such that the maximum flowrate of the measuring system is reached when no air enters.

(2) Tests on a gas extractor and a special gas extractor

The measuring system comprising the gas elimination device must be constructed so that the tests can be carried out as described in Annexure B, Paragraph 1(3) or 1(4).

3. Tests on gas elimination devices forming part of a measuring system during verification

The gas elimination devices are tested without it being necessary to verify that the maximum permissible errors for the individual units are complied with.

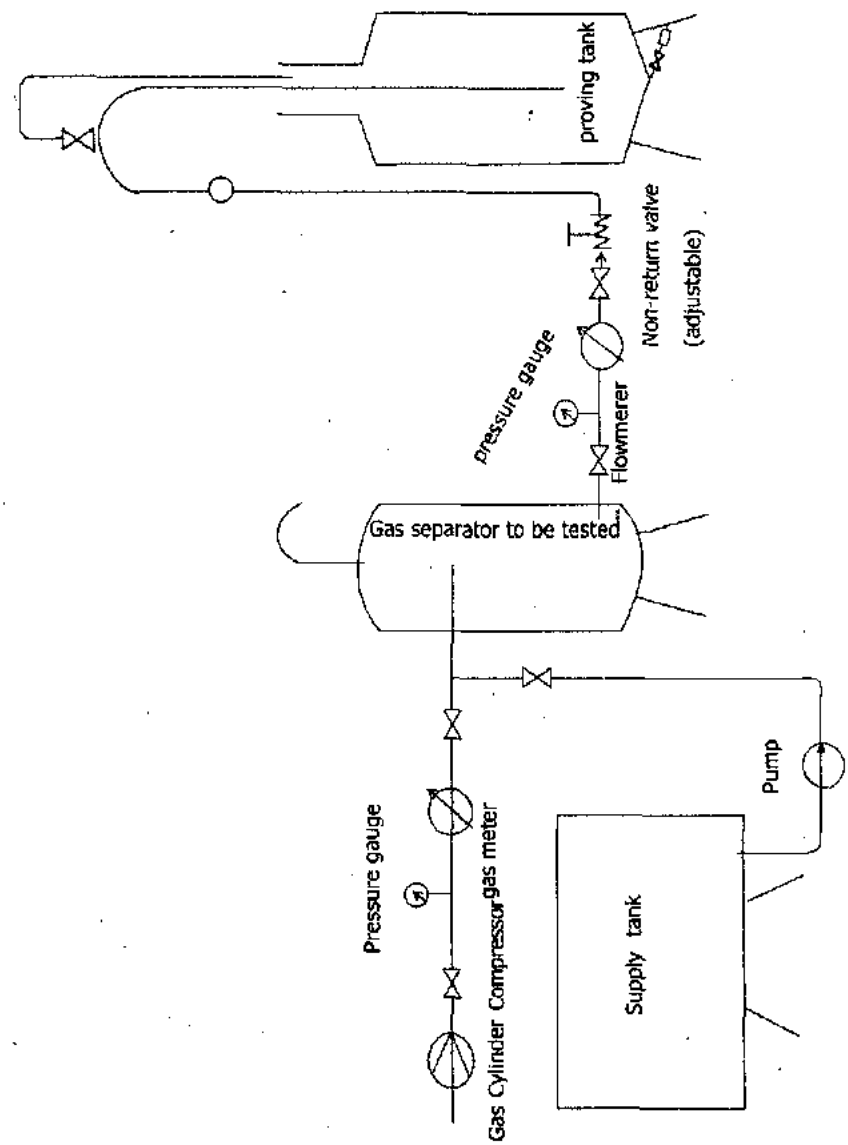

FIGURE-1

TEST BENCH FOR GAS SEPARATORS

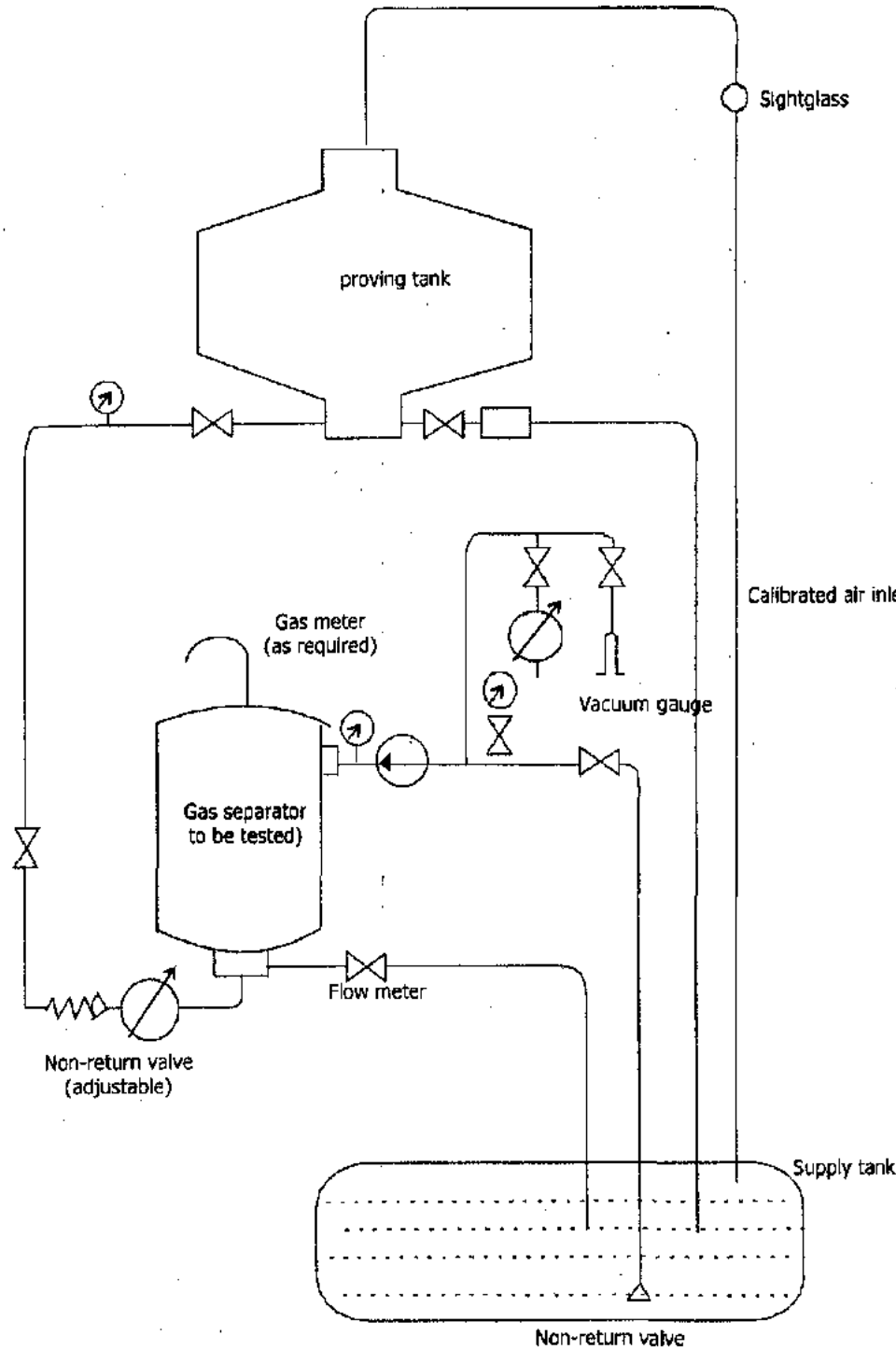

FIGURE-2

TEST BENCH FOR GAS SEPARATORS

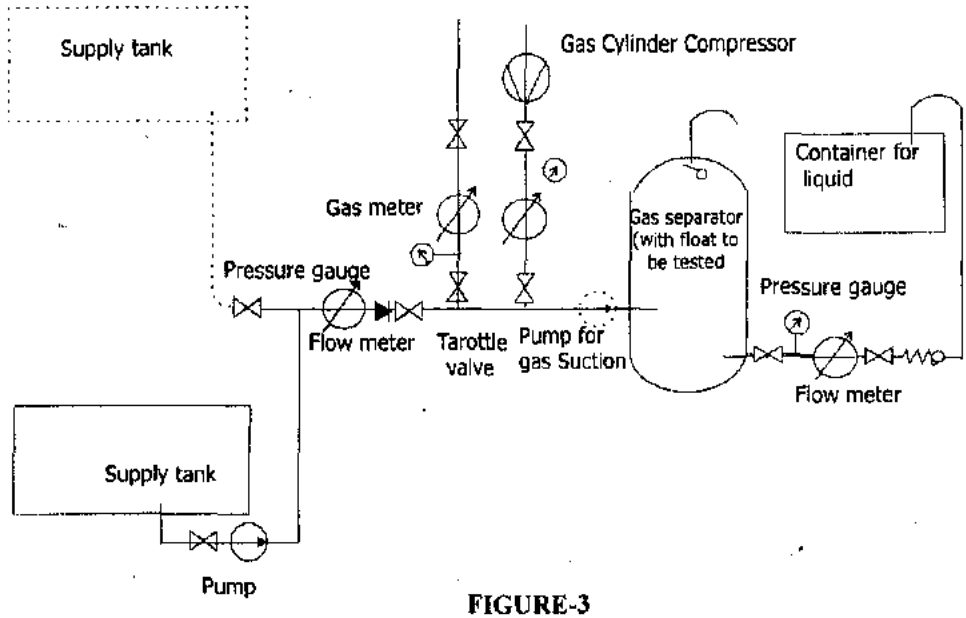

FIGURE-3
TEST BENCH FOR GAS SEPARATORS
..... with gas injection
..... with gas suction

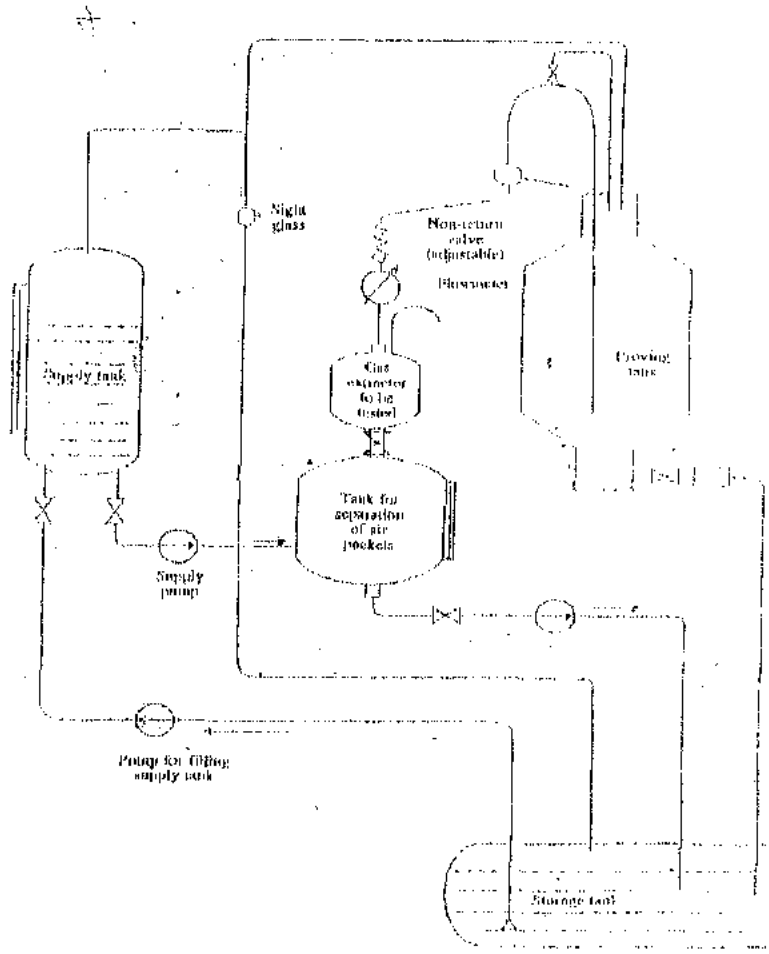

FIGURE-4
TEST BENCH FOR SPECIAL GAS EXTRACTORS

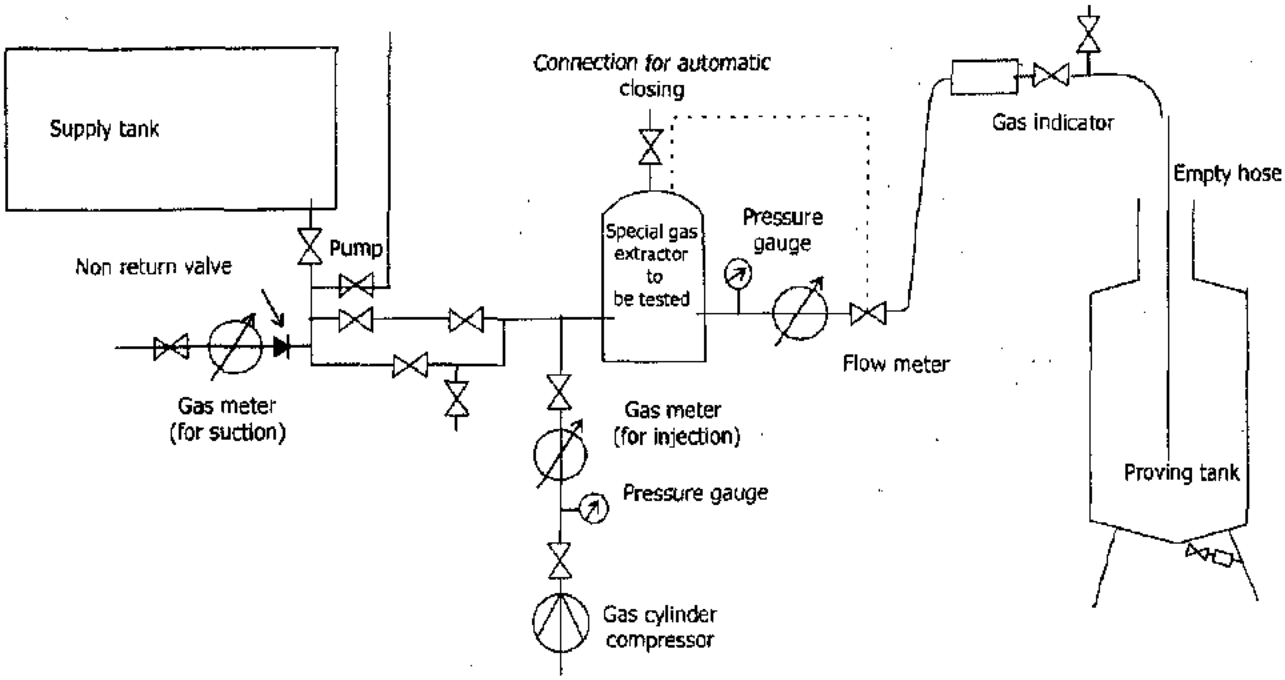

FIGURE-5 : Test bench for special gas extractors

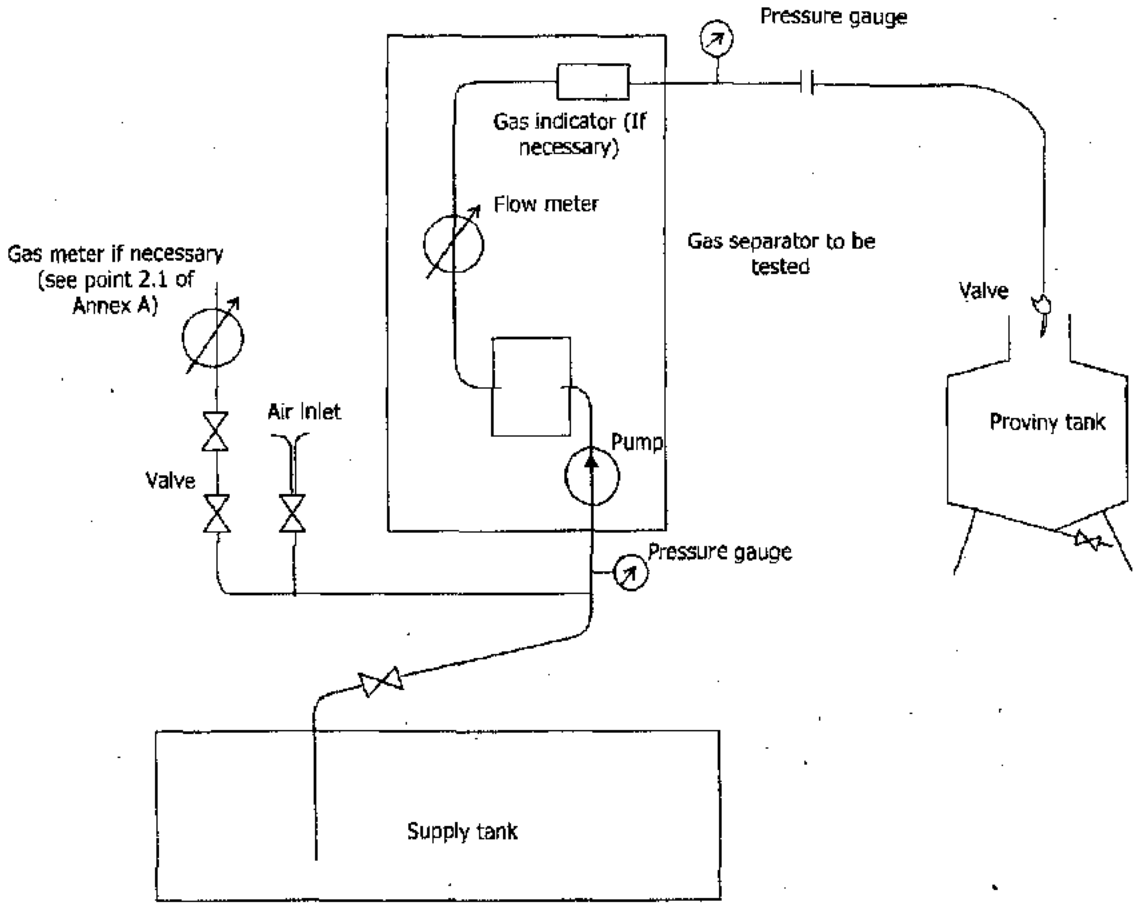

FIGURE-6
TESTING FACILITY FOR GAS SEPARATORS IN FUEL DISPENSERS

474 GI/11-144

PART V

VOLUMETRIC CONTAINER TYPE LIQUID MEASURING DEVICE

1. General

The volumetric container type liquid measuring device consists of a bucket, a float and a dip stick suitably graduated to indicate the volume of liquid at different heights in the bucket. The device is generally used for measuring the quantity of milk at milk purchasing centres.

2. Nominal capacities

(a) The unit of volume shall be the cubic decimetre or litre; or the cubic centimetre (cm) or millilitre.

(b) The volumetric container type liquid measuring device may be one of the following capacities :

5 dm^3, 10 dm^3, 20 dm^3 and 50 dm^3

(c) The value of the smallest graduation on the dipstick shall be of the form of 1 x 10n, 2 x 10n or 5 x 10n where 'n' represents a whole number, positive or negative or is equal to zero.

3. General requirements

(a) The bucket shall be made of suitable metal or alloy. The metal or alloy used shall be thermally stable, shall resist deformation, shall not have an unduly high coefficient of cubical expansion, and shall not affect the liquid being measured in any way or be injurious to health. Some of the materials considered suitable are :

(i) mild steel,

(ii) stainless steel,

(iii) brass sheet,

(iv) copper sheet,

(v) aluminium alloy.

(b) The wall thickness of the bucket shall be so selected that the bucket will not get dented in normal use or become unusable after a few years in service.

(c) The bucket shall be free from surface defects and indentation. External and internal surfaces of the bucket made of mild steel, copper sheet and brass sheet shall be well tinned or tin plated.

(d) All seams shall be filled and smoothened to prevent the entrapment of air or liquid.

(e) The bucket shall be provided with a well formed and proportionate spout to facilitate pouring of liquid.

(f) The bucket shall be cylindrical in form. The bottom of the bucket shall be slightly concave to prevent change of shape due to the weight of the liquid. The maximum depth of the concavity shall not be more than 20 mm.

(g) The bottom of the bucket shall be reinforced with angle strip of thickness not less than 5 mm.

(h) The upper edge of the bucket shall be reinforced round the circumference with a reinforcing band having a thickness not less than 5 mm.

(i) The bucket shall be provided with a suitable handle on the side opposite the spout.

(j) The top of the bucket shall be provided with a cross band across the diameter. The band shall have groove of appropriate size and centrally located for inserting the dip stick.

(k) The float shall be suitably fabricated so as to be free from holes, pockets, dents or crevices. A dip stick shall be firmly welded on the upper centre of the float. The dip stick together with the float shall be so constructed that the device so formed maintains verticality in all positions.

(l) The dip stick shall have a rectangular cross-section of minimum dimensions 20mm x 10mm. The graduations shall be made by engraving or other means on both sides of the vertical surface.

(m) The dip stick shall be graduated at suitable intervals throughout the nominal capacity of the measure.

(n) The graduation lines on the dip stick shall be clear straight, perpendicular to the axis of the stick and of uniform thickness not exceeding 1 mm.

(o) The dip stick shall be identified with the bucket by a number of identifications, which shall be clearly legible and indelible.

4. Marking

The following inscriptions shall be clearly and indelibly marked at a conspicuous place on the bucket or on a special plate securely attached to the bucket :—

(a) nominal capacity,

(b) manufacturer's name or trade mark,

(c) the words "for edible liquids".

5. Sealing

A suitable plate or other device shall be provided to receive the stamp or seal of the verification authority.

PART VI

CLINICAL THERMOMETER

PART A

CLINICAL THERMOMETER—SOLID STEM TYPE

Scope : This part specifies the requirements and methods of tests for solid stem type mercury in glass clinical thermometers having a maximum indicating device.

1. Terminology

For the purpose of this standard the definitions given in IS 2627—1979 Glossary of terms relating to liquid-in-glass thermometers (first Revision) as revised from time to time in addition to the following, shall apply.

2. Types

The thermometers shall be of the solid stem mercury-in-glass type.

3. Temperature Scale

The thermometers shall be graduated in degrees Celsius (°C) and shall have a range from 35° to 42°C or 35° to 43°C.

4. Testing

Thermometers shall be tested for total vertical immersion.

5. Requirements

(1) *Patterns*—There shall be two patterns of bulb, namely, oral and rectal as follows:—

(a) Oral—for thermometers for use in mouth and

(b) Rectal—for thermometers for use in rectum

Note 1: Oral thermometers may also be used in armpit or groin.

Note 2: Rectal thermometers may also be used in the mouth, armpit or groin after proper disinfection. Rectal thermometers if used orally, may however give slightly lower reading.

(2) *Materials*

(i) *Glass tubing*—The thermometers shall be made from glass tubing conforming to IS 4529—1968 Specification for glass tubes for medical thermometers.

(ii) *Bulb*—The thermometer bulb shall be made from a type of glass which assures that the depression of zero, determined in accordance with the procedure given in Appendix D, does not exceed 0.07°C. The glass shall be identified visible and indelible, either by the glass manufacturer or by the manufacturer of the thermometer.

(iii) The types of glass used for the maximum device, capillary tube, and bulbs shall meet the following requirements:—

When the glass is analyzed according to the requirements of IS 2303 (Part I/Section 1), the quantity of alkali passed into solution for 1g of glass must correspond to not more than 263.5g of Na_2O.

(iv) *Thermometric liquid* — The thermometric liquid shall be pure, dry mercury.

(3) *Construction*

(i) The stem shall be in alignment with the bulb.

(a) The free end of the stem shall be finished smooth, preferably hemispherical in shape, as shown in Figure 1.

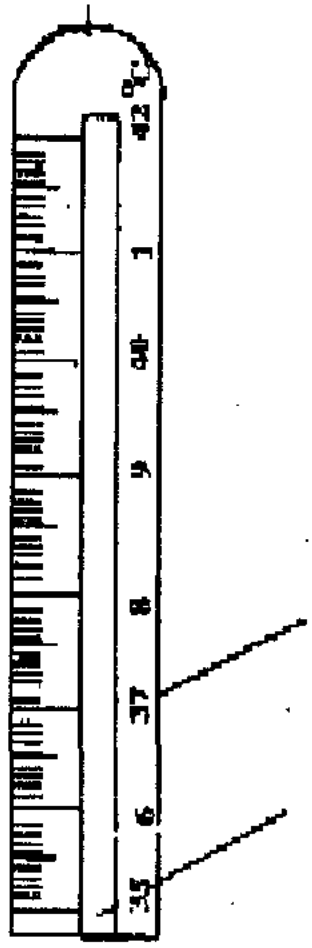

FIGURE 1 STEM OF CLINICAL THERMOMETER

(ii) *Maximum indicating device (constriction)*—The thermometers shall have a maximum indicating device (constriction) constructed in the capillary, between the mercury bulb and the scale in order to prevent the mercury in the stem from returning to the bulb on cooling. It shall be located in the bore between the top of the bulb and the bottom of the scale.

(a) The maximum indicating device shall pass the hardness test prescribed in Appendix A when an acceleration of 600 m/sec2 is applied at the closed end of the bulb for a period of at least 2 minutes.

(iii) *Locator*—A locator may be drawn on the stem before the start of the scale to facilitate positioning the thermometer so that the mercury column is in full view. The locator may comprise a thick (1 mm of more) dot or line or a rectangle of 1 x 3 mm.

(iv) *Bulb*—The bulb shall be cylindrical with a smooth rounded end and shall be in alignment with the stem.

(a) The diameter of bulb and the joint of bulb with stem shall nowhere exceed that of the stem. The joint shall be smooth and regular.

(b) The bulb shall be hemispherical at the tip.

(v) The bulb, capillary tube and mercury shall be sufficiently free from entrapped gas, debris and foreign bodies in order to ensure the correct functioning of the thermometer.

(4) *Dimensions*

The dimensional and scale requirements for solid stem type clinical thermometers, shall be as given in Table 1.

TABLE 1

DIMENSIONAL AND SCALE REQUIREMENTS FOR SOLID STEM CLINICAL THERMOMETERS

Sl. No.	*Characteristic*	*Requirements*
(1)	*(2)*	*(3)*
(i)	Scale range, °C	35.0 to 42.0 or 35.0 to 43.0
(ii)	Smallest scale division, °C	0.1
(iii)	Over all length, mm	100 to 115
(iv)	Scale length, mm	40 to 65
(v)	External diameter of stem, mm	4 to 6
(vi)	Bulb length, mm	
	(a) Oral thermometer	12 to 18
	(b) Rectal thermometer	Not more than 9
(vii)	External diameter of bulb, mm	
	(a) Oral thermometer	2.0 to 3.5
	(b) Rectal thermometer	3.0 to 6.0 (But not exceeding that of stem)
(viii)	Distance from top of the constriction to the 35.5°C mark, mm, Min.	10
(ix)	Distance from the highest graduation line to top of stem, mm, Min	8
(x)	Scale spacing, mm Min	0.5

Note : See Figure 3 in IS 8757 : 1977

(5) *Graduation and Numbering*

(i) The thermometer scale shall be sub-divided in 0.1°C as shown in Figure 55Q.

(ii) The graduation lines shall be equally spaced and at right angles to the axis of the thermometer.

(iii) All graduation lines shall be of equal and uniform thickness of not more than 1/4 of the length of the smallest scale division or 0.15 mm whichever is less.

(iv) The pattern of graduation and numbering shall be as follows:—

(a) Every tenth graduation line shall be a long line (about 2 mm) which shall be numbered.

(b) There shall be a medium line (about 1.5 mm) midway between two consecutive long lines, and

(c) There shall be four short lines (about 1 mm) equally spaced between consecutive medium and long lines.

(v) When the thermometer is held in a vertical position and viewed from the front, the left-hand ends of the graduation lines shall lie on an imaginary vertical line (see Figure 55Q).

(vi) The numbers shall be placed to the right of the axis in such a way that extension of the line to which they refer, would bisect them. The figures shall be placed parallel to the axis of the thermometer.

(vii) A distinguishing mark (say, an arrow) shall be marked at 37.0°C mark to indicate the normal temperature.

(viii) All graduation lines and numbering shall be clearly and permanently marked or etched on the stem and filled with a pigment. The marking shall pass the test for permanency given in Annex B.

Note : The pigment may be black, red, green or blue as agreed to between the purchaser and the supplier.

6. Performance requirements

(1) *Appearance*

When heated to 42°C or so the mercury column shall look like a strip of uniform width with clarity and brightness throughout.

Note : This test takes care of all visual defects, for example, twist in the glass, aberrations, cloudiness, devitrification, etc.

(2) *Ageing and Accuracy*

(i) The clinical thermometers shall meet all the requirements after ageing by natural or artificial means.

Natural Ageing involves holding the thermometers at room temperature for four months after completion of the construction. Artificial ageing method involves heat treatment of the bulb and constriction of the unfilled thermometer at a temperature and duration to be specified by the manufacture of the glass tubing.

(ii) Clinical thermometers shall after ageing ensure that their accuracy as measured by the method prescribed in Appendix C shall be ± 0.1°C for at least one year after the first official verification.

(3) *Influence of Immersion Time*

If a thermometer at temperature t_1 (15°C t_1 < 30°C) is suddenly immersed in a well-stirred water bath having a constant temperature t_2 (35.5°C < t_2 < 42°C) and is withdrawn after 20 seconds the thermometer reading, after cooling to ambient temperature (15°C to 30°C)

(i) shall comply with maximum permissible error requirement, and

(ii) shall not deviate from its stabilized reading for temperature t_2°C by more than 0.005 $(t_2 - t_1)$°C.

This stabilized reading is the thermometer reading obtained when the thermometer has been cooled to ambient temperature, after reaching complete thermal equilibrium with the water bath at a temperature t_2°C. This reading shall also meet the maximum permissible error requirements stipulated in paragraph 6(2)(ii).

Note : A free choice of test method is permitted, provided the law of the variation of the indication of the thermometer as a function of immersion time is known.

7. Marking and Packing

(1) *Marking*

Each clinical thermometer shall be legibly and indelibly marked on its stem with the following:—

(a) The letter °C near the top of the scales;

(b) The word Oral or Rectal, as the case may be;

(c) The manufacturer's name or his recognized trade-mark, if any;

(d) A code number to trace the batch of manufacture;

(e) A recognized mark of the verifying authority showing the year of initial verification;

(f) An indication identifying the glass used for the bulb, if the glass is not already identified by its maker; and

(g) The Standard Mark of the Bureau of Indian Standards.

(2) *Packing*

Clinical thermometers shall be securely packed, individually and collectively, in any manner acceptable to the purchaser so as to minimize the risk of damage in handling, transport and storage.

APPENDIX A

TEST FOR HARDNESS OF MAXIMUM INDICATING DEVICE

1. Apparatus

(1) *Centrifuge*—A centrifuge with radial arms 15 cm each. Each arm shall be provided with a pocket for keeping one or more clinical thermometers. Speed of the centrifuge shall be either fixed or adjustable to 600ppm.

2. Procedure

(1) Place the thermometers for sometime in water at a temperature anywhere between 42°C — 43°C. Then put them in the pockets of all the centrifuge, bulb facing outwards, that is away from the axis of the centrifuge while in rotation.

Let the centrifuge work steadily at its correct speed for at least 2 minutes. Then stop it.

Take the thermometers out of the pockets and observe the mercury column.

Thermometers shall be taken as having satisfied the requirement of this test, if the mercury rests below or at 35°C mark.

Important—It is necessary that the room temperature does not exceed 34.5°C during the test.

APPENDIX B

TEST FOR PERMANENCY OF MARKING

1. Procedure

(1) Place the thermometers in a 5 per cent (m/v) solution of phenol in water maintained at 37 ± 0.5°C for a period of 20 minutes.

(2) Wipe the thermometers dry with a piece of soft cloth and examine.

(3) The thermometers shall be considered to have passed the test if, after this treatment, the marking does not peel off anywhere.

APPENDIX C

TEST FOR ACCURACY

1. Apparatus

(1) *Comparator Bath*—Either screw type or bubbler type, as prescribed in IS 6274-1971 Method of calibrating liquid-in-glass thermometers, filled with water.

(2) *Reference Thermometers*—Calibrated reference thermometers (see schedule mark ISTI of IS 4825 : 1968)

2. Procedure

(1) After preliminary check of the clinical thermometers, carry out the accuracy test in accordance with 6.2 of IS 6274—1971 at 37.0 ± 0.5°C, 39.0 ± 0.5°C and 41.0°C ± 0.5°C respectively.

(2) The thermometers shall be considered to have passed this test if the accuracy so determined lies within limits prescribed in paragraph 6(2)(ii).

APPENDIX D

DETERMINATION OF THE MEAN DEPRESSION OF ZERO OF THERMOMETERS

1. It is not possible to determine the depression of zero of clinical thermometers (mercury-in-glass, with the maximum indicating device) covered by this specification. Therefore, special test thermometers (paragraph 2) shall be manufactured from the glass being examined in order to conduct the necessary measurements.

2. The test thermometers must meet the following requirements—

(1) Scale Range
At least from - 3.0°C to + 3.0°C.

(2) Scale Interval
0.02°C, 0.05°C or 0.1°C

(3) The scale spacing must be at least 1.0 mm.

(4) The expansion chamber must be large enough to allow the thermometers to be heated to 400°C without damage.

(5) The thermometers must be properly stabilized by the manufacturer and must meet the requirements of the stabilization test (see paragraph 3).

3. The proper stabilization of each test thermometer must be tested in accordance with the following provisions:—

(1) The thermometer is heated in a test bath (liquid bath or metal block type oven) from ambient temperature up to 350°C ± 10°C and keep at this temperature for at least five minutes. It is then cooled to 50°C in the test bath, which decreases in temperature by 10 to 15°C/h.

(2) When the thermometer has reached a temperature of 50°C, it is removed from the test bath and its 0°C correction value (K_1) is determined with the help of a zero point (0°C) ice bath, which consists of a Dewar flask filled with finely crushed ice covered over with water. The water used to make the ice and the water in which ice is submerged must be pure. Its electrical conductivity must not exceed 10–3 S.m1 at 20°C. The ice must be carefully tamped so that there are no air bubbles in the ice-water mixture. It must be compacted as much as possible both prior to measurement and periodically during measurement.

It is recommended that a water purifier, a refrigerator with ice trays and an ice crusher be employed for preparing the ice-water mixture.

(3) The thermometer is then heated a second time to 350°C ± 10°C in the test bath and kept at this temperature for 24 hours. It is then cooled to 50°C, as before {paragraph 3(1)}.

(4) When the thermometer has reached a temperature of 50°C, it is removed from the test bath and its 0°C correction value (K_2) is determined once more.

(5) K_2 must not differ from K_1 by more than 0.15°C. Thermometers which do not meet this requirement must not be used to determine the depression of zero.

4. The mean depression of zero is determined in accordance with the following provisions:—

(1) At least three test thermometers must be used. They must be manufactured from the glass being tested, must have met the requirements of the stabilization test (paragraph 3), and not have been heated above the ambient temperature once value K_2 has been determined [paragraph 3(4)].

(2) Each of these thermometers must be tested at least three times in accordance with the provisions of [paragraphs 4(2)(i), 4(2)(ii) and 4(2)(iii) below].

(i) The thermometer is kept in a test bath at 100°C ± 1.0°C for 30 minutes. It is then removed from the bath and allowed to cool in air. While it is cooling to ambient temperature, its bulb must not come into contact with other objects.

(ii) The 0°C correction of the thermometer is determined not later than 15 minutes after the thermometer has been removed from the test bath. The correction value obtained is designated by the symbol K_3.

(iii) The thermometer is then kept for one week at a temperature between 20°C and 25°C. At the end of the week the 0°C correction is determined. This correction value is designated K_4. The procedures described in paragraphs 4(2)(i) and 4(2)(ii) are then repeated, and a 0°C correction value, designated K_5, is obtained.

(iv) The procedures described in paragraph 4(2)(iii) are repeated to obtain a series of n differences K_2 - K_3, K_4 - K_5, K_{2n} - K_{2n+1}. These are the values of the thermometer's depression of zero from the first, second and *n* the series of measurements, respectively.

(v) When *n* series of measurements have been made with *m* test thermometers, the following expression is obtained for the mean depression of zero of these thermometers.

$$\frac{1}{mn}\sum_{i=1}^{i=m}\left[\left(k_2^{(i)}-k_3^{(i)}\right)+\left(k_4^{(i)}-k_5^{(i)}\right)+\left(k_{2n}^{(i)}-k_{2n+1}^{(i)}\right)\right]$$

which must not exceed 0.07°C {paragraph 7(2)(ii)}

In accordance with the provisions of paragraphs 4(1) and 4(2), the conditions m 3 and n 3 must be met for *m* and *n*, and the standard deviation of the mean depression of zero determined in accordance with the aforementioned provisions, must not exceed ± 0.01°C.

(vi) If a more accurate value for the mean depression of zero is required, at least five series of measurements on at least five test thermometers must be carried out.

PART B

CLINICAL THERMOMETER—ENCLOSED SCALE TYPE

Scope : This Part specifies the requirements and methods of test for enclosed scale type clinical thermometers having a maximum indicating device.

1. Terminology

(1) For the purpose of this standard the definitions given in IS 2627-1979 Glossary of terms relating to liquid-in-glass thermometers as revised from time to time, in addition to the following, shall apply.

(2) *Glass tubes*—Sheath tubes, capillary tubes and bulb tubes.

2. Type

The thermometers shall be of the enclosed-scale mercury-in-glass type.

3. Temperature Scale

The thermometers shall have a translucent paper or plastic material strip duly graduated in degrees Celsius (°C) and shall have a range from 35 to 42°C or 35 to 43°C.

4. Immersion

Thermometers shall be calibrated for total vertical/horizontal immersion.

5. Requirements

(1) *Patterns*—There shall be two patterns of bulb, namely, oral and rectal as follows:

(c) Oral-for thermometers for use in mouth, and

(d) Rectal-for thermometers for use in rectum.

Note 1 : Oral thermometers may also be used in armpit or groin.

Note 2 : Rectal thermometers may also be used in the mouth, armpit or groin after proper disinfection

(2) *Materials*

(i) *Glass tubing*—The thermometers shall be made from glass tubing conforming to IS 4529-1968 Specification for glass tubes for medical thermometers.

(ii) *Thermometric liquid*—The thermometric liquid shall be pure, dry mercury.

(iii) *Strip*—The strip bearing the scale shall be of a translucent or plastic material suitable for the temperature to be read.

(3) *Construction*

(i) The thermometer sheath shall be in alignment with the bulb and it shall be round or oval.

(a) The free end of the sheath shall be finished smooth, preferably hemispherical in shape as shown in Figure 2

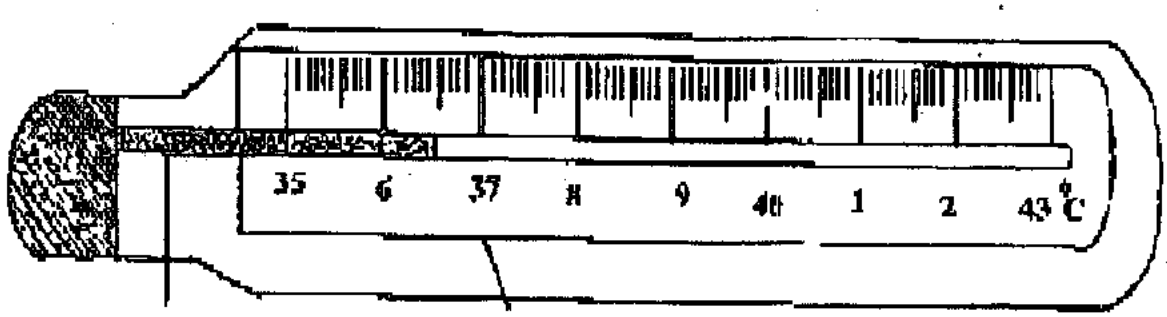

FIGURE-2 CLINICAL THERMOMETER : ENCLOSED SCALE TYPE

(ii) *Maximum Indicating device (constriction)*—The thermometers shall have a maximum indicating devices (constriction) constructed in the capillary, between the mercury bulb and the scale in order to prevent the mercury in the stem from returning to the bulb on cooling.

(a) The maximum indicting device shall pass the hardness test prescribed in Appendix A when an acceleration of 600 m/sec² is applied at the closed end of the bulb for a period of at least 2 minutes.

(iii) *Bulb*—The bulb of the oral thermometers shall be cylindrical with a smooth rounded end and shall be in alignment with the sheath. The bulb of the rectal thermometers shall be pear-shaped.

(a) The diameter of bulb and the joint of bulb with sheath shall no where

exceed that of the sheath. The joint shall be smooth and regular.

(b) The bulb shall be hemispherical at the tip.

(iv) *Strip bearing the scale*—It shall be placed tightly against the capillary tube inside the sheath and shall be firmly and securely fastened at the top of the thermometer in such a way that it can freely expand in length. The fixing shall not obscure the scale.

Note : A suitable method of fixing is by fusing a glass tube or rod to the sheath and to the upper end of the strip bearing the scale.

(v) *Capillary tube*—The capillary tube shall be smooth and uniform.

(4) *Dimensions*—The dimensional and scale requirements for clinical thermometers, enclosed scale shall be as given in Table 2.

TABLE 2

DIMENSIONAL AND SCALE REQUIREMENTS FOR CLINICAL THERMOMETERS, ENCLOSED SCALE

Sl. No.	Characteristic	Requirements
(1)	(2)	(3)
(i)	Scale range, °C	35 to 42 or 35 to 43
(ii)	Smallest scale division, °C	0.1
(iii)	Over all length, mm, Max	120
(iv)	Scale length, mm	45 to 65
(v)	External diameter of sheath, mm (round or oval), max	12
(vi)	External diameter of capillary, mm	2 ± 0.2
(vii)	External diameter of the bulb, mm	4 ± 0.5
(viii)	Bulb length, mm, max	21
(ix)	Thickness of strip, mm	0.6 ± 0.1
(x)	Distance above the constriction upto the 35°C mark, mm, Min	10
(xi)	Distance from the highest graduation line to top of sheath, mm, Min	8

(5) *Graduation and Figuring*

(i) The thermometer scale shall be sub-divided in 0.1°C as shown in Figure 55R.

(ii) The graduation lines shall be of black pigment, marked permanently on the strip. They shall be equally spaced and at right angles to the axis of the thermometer.

(iii) All graduation lines shall be of equal and uniform thickness of not more than 0.2 mm.

(d) Every tenth graduation line shall be a long line (about 2 mm) which shall be figured.

(e) There shall be a medium line (about 1.5 mm) midway between two consecutive long lines, and

(f) There shall be four short lines (about 1 mm) equally spaced between consecutive medium and long lines.

(iv) When the thermometer is held in a vertical position and viewed from the front, the left-hand ends of the graduation lines shall lie on an imaginary vertical line (see Figure 55R).

(v) The figures shall be placed to the right of the axis in such a way that extension of the line to which they refer, would bisect them. The figures shall be placed parallel to the axis of the thermometer.

(vi) A distinguishing mark (say, an arrow) shall be marked at 37.0°C mark to indicate the normal temperature.

474 GI/11-146

(vii) All graduation lines and figures shall be clearly visible.

6. Performance requirements

(1) *Appearance*—When heated to 42°C or so the mercury column shall look like a strip of uniform width with clarity and brightness throughout.

Note: This test takes care of all visual defects, for example, twist in the glass, aberrations, cloudiness, devitrification, etc.

(2) *Ageing and Accuracy*—Clinical thermometers shall be adequately aged to ensure that their accuracy as measured by the method prescribed in Appendix B shall be ± 0.1°C for at least one year after the first official verification.

(3) *Time of Response*—The time of response of clinical thermometers, as checked by the method prescribed in Appendix C shall not exceed 8.0 seconds.

When the temperature is rising very slowly at a uniform rate, the jumping of the meniscus of the thermometric liquid does not exceed one-half of the smallest scale division.

7. Marking and Packing

(1) *Marking*—Each clinical thermometer shall be legibly and indelibly marked on its stem with the following:—

(a) The letter °C near the top of the scales;

(b) The word Oral or rectal as the case may be;

(c) The manufacturer's name or his recognized trade-mark, if any;

(d) A code number to trace the batch of manufacture; and

(e) A recognized mark of the verifying authority showing the year of initial verification;

(f) The Standard Mark of the Bureau of Indian Standards.

(2) *Packing*—Clinical thermometers shall be securely packed, individually and collectively, in any manner acceptable to the purchaser so as to minimize the risk of damage in handling, transport and storage.

APPENDIX A

TEST FOR HARDNESS OF MAXIMUM INDICATING DEVICE

1. Apparatus

(1) *Centrifuge*—A centrifuge with radial arms 15 cm each. Each arm shall be provided with a pocket for keeping one or more clinical thermometers. Speed of the centrifuge shall be either fixed or adjustable to 600 rpm.

2. Procedure

(1) Place the thermometers for some time in water at a temperature anywhere between 42 and 43°C.

(2) Then put them in the pockets of all the centrifuge, bulb facing outwards, that is away from the axis of the centrifuge while in rotation.

(3) Let the centrifuge work steadily at its correct speed for at least 2 minutes. Then stop it.

(4) Take the thermometers out of the pockets and observe the mercury column.

(5) Thermometers shall be taken as having satisfied the requirement of this test, if the mercury rests below or at 35°C mark.

Important—It is necessary that the room temperature does not exceed 34.5°C during the test.

APPENDIX B

TEST FOR ACCURACY

1. Apparatus

(1) *Comparator Bath*—Either screw type or bubbler type, as prescribed in IS 6274-1971 Method of calibrating liquid-in-glass thermometers, filled with water.

(2) *Reference Thermometers*—Calibrated reference thermometers [see Schedule Mark 8 and 9 of the IS 4825-1982 specification of liquid-in-glass solid-stem reference thermometers (first revision)].

2. Procedure

(1) After preliminary check of the clinical thermometers, carry out the accuracy test in accordance with 6.2 of IS 6274-1971 at 37.6 ± 0.5°C, 39.0 ± 0.5°C and 41 ± 0.5°C respectively.

(2) The thermometers shall be considered to have passed this test if the accuracy so determined lies within limits prescribed in paragraph 6(2).

APPENDIX C

TEST OF TIME OF RESPONSE

1. Apparatus

Same as in paragraphs 1(1) and 1(2) of Appendix B provided that some automatic arrangement is made to switch off stirring at the instant the bulb of thermometers under test touch the water surface and to switch it again immediately after the thermometers are taken out of the water.

2. Procedure

(1) Set the comparator bath at a temperature of 41 ± 0.5°C. Note the temperature on the reference thermometer.

(2) Shake down the clinical thermometers under test to maximum extent.

Note : Centrifuge mentioned under para 1(1) of Annexure A may be used for this purpose, if required.

(3) Plunge the clinical thermometers into the bath upto 35°C mark. Take out suddenly after 7.5 to 8.0 seconds wipe and dry. Take their readings.

(4) Thermometers shall be considered to have passed this test, if they indicate temperature within ± 0.1°C of the comparator bath temperature noted in paragraph 2(1) of this Appendix.

Important—It is necessary that the room temperature does not exceed 34.5°C during the test.

PART C

CLINICAL ELECTRICAL THERMOMETERS WITH MAXIMUM DEVICE

1. Scope

(1) This Part specifies the metrological and technical requirements for clinical electrical thermometers with a maximum device. Such instruments are designed to measure human or animal body temperature. They indicate a maximum temperature measured after a steady state is reached or predicted after a time specific to the design of the instrument. Until the maximum temperature is indicated, the actual temperature may be indicated by the thermometer.

(2) The measuring range of clinical thermometer shall be either of 35°C to 42°C or 35°C to 43°C. Two accuracy classes, class I and class II, are covered by this specification.

(3) This specification applies to battery-powered instruments which provide a digital indication of temperature.

(4) Clinical electrical thermometers designed to measure skin temperature are not covered by this specification.

(5) This specification does not exclude the use of any contract device based on other measurement principles that meets equivalent performance standards in determining maximum body temperature at specified time intervals.

2. Terminology

(1) A clinical electrical thermometer, as covered by this specification is a contact thermometer comprising a temperature probe and an indicating unit, and that is designed to measure human or animal body temperature.

(2) A temperature probe is the component of a thermometer of which part is applied to a body cavity or tissue with which it establishes thermal equilibrium. It comprises a temperature sensor with associated parts including coverage, seals, inner leads, and connecting plug, where appropriate.

Notes : 1. A body or tissue may be the mouth (sublingual), rectum, or armpit.

2. The part of the probe in contact with a body cavity or tissue is called the 'applied part'.

3. An indicating unit is the component of a thermometer that process the output signal of the temperature sensor and displays the measured temperature.

4. A maximum device is the component of a thermometer that monitors over a specified time the temperature measured by a probe in contact with a body cavity or tissue, at which it indicates the maximum temperature and maintains the indication until reset by the user.

5. Predicting clinical electrical thermometer calculates the maximum temperature of a probe in contact with a body cavity or tissue, without waiting for thermal equilibrium to occur, by using heat transfer data and a mathematical algorithm.

3. Description of the instrument

(1) A complete thermometer consists of a temperature probe connected to any indicating unit.

The instrument may be of the following type:—

—indicating unit that is compatible with the characteristic response of a probe.

4. Metrological requirements

(1) *Unit of measurement-measuring range-scale interval*

(a) The unit of temperature shall be the degree Celsius °C.

(b) The measurement range shall be a minimum of 35°C to 43°C or 35°C to 42°C. Greater measuring ranges may be sub-divided into partial ranges; however, the range 35°C to 42°C shall be continuous.

(c) The scale interval or digital increment shall not exceed—

- 0.01°C for class I thermometers,
- 0.1°C for class II thermometers.

(2) *Maximum permissible errors*

(a) The maximum permissible error under reference conditions for the temperature range 32.0°C to 42.0°C for the two accuracy classes covered shall be as follows:—

Maximum permissible errors (range 32.0°C to 42.0°C)

Accuracy class	*Complete thermometer*	*Indicating unit*	*Temperature probe*
Class I	± 0.15°C	± 0.05°C	± 0.1°C
Class II	± 0.2°C	± 0.1°C	± 0.1°C

(b) Outside the temperature range 32°C to 42°C, the maximum errors shall be at twice the values specified in paragraph 4(2)(a).

(3) *Reference conditions*

The reference conditions for the requirements of paragraph 4(2) shall be:

- ambient temperature of 27°C ± 5°C
- relative humidity to 50% ± 20%
- the instrument operating within the specified range of battery voltage (specified power supply conditions).

(4) *Time response*

The thermometer shall be submitted by the manufacturer to a testing laboratory to determine its time response. The test shall be based on any analysis of a significant sample of human subjects.

The difference between the displayed calculated temperature and the corresponding measured temperature at thermal equilibrium of calculating (predicting) thermometer shall not exceed 0.2°C.

5. Technical requirements

(1) *Temperature probe*

(i) For an interchangeable probe of the resistance type, the manufacturer shall specify the maximum power that may be supplied to the probe by an indicating unit; this power shall not cause energy dissipation (I^2R) giving rise to any increase in temperature by more than 0.02°C when immersed in a reference water bath maintained at a temperature range of 36.9°C to 37.1°C.

Note :(1) For a description of the reference water bath, see Annexure A.

(2) A test of this requirement is only applicable to inter-changeable probes submitted for pattern approval without a specific indicating unit. When a probe is submitted with an associated indicating unit, the requirement in 5(2)(7) applies.

(ii) The thermal stability of the probe, after exposure for 100 hours at 80°C ± 2°C or 300 hours at 55°C ± 2°C, shall be such that the requirement for maximum permissible errors specified in paragraph 4(2) is met.

(iii) The electrical insulation of the probe shall be sufficient to prevent a change in indicated temperatures greater than ± 0.02°C when the probe is immersed in an electrically conducting liquid having an insulation resistance of 80 MW at 20°C. This insulation includes that between the inner lead wires, that between the wires and the surface of the probe, and that encasing and protecting connections and transitions.

(iv) The locations of the sensors in the probe shall be such that, when the probe is immersed to depths greater than 50 mm from its tip in a reference water bath at a temperature does not vary by more than 0.05°C from that indicated at a depth of 50 mm.

(v) The probe shall be strong enough to withstand mechanical stresses expected under normal conditions of the use.

(vi) If the probe is inter-changeable, it shall be fitted with either a plug-in or quick dis-connectable electrical connector. The contact resistance of the connector or the insulation resistance between the circuits of the connector or to ground shall not cause a variation in the indicated temperature greater than 0.02°C.

Note : The connectors may not be required to be water resistant.

(vii) The probe shall meet the requirements for maximum permissible errors specified in paragraph 4(2) when the applied part has been subjected to the cleaning in and disinfecting procedure specified by the manufacturer.

Notes : (1) For small compact thermometers this applies to the complete instrument.

(2) The materials of the probe that come into contact with the body should be selected for compatibility with body tissue.

(viii) The output signal of the probe shall not vary by more than ± 0.05°C when the temperature of the cable connecting it to an indicating unit varies by 20°C.

(2) *Indicating unit*

(i) When connected to a resistance-type temperature probe, the indicating unit shall provide an energizing potential sufficiently low so that energy dissipation (I^2 R) in the probe shall not cause an increase in indicated temperature of over 0.01°C when the probe is immersed in a reference water bath at a temperature within the specified measuring range.

(ii) The indicating unit shall not indicate a temperature when connected to a battery charger.

(iii) The digital display of temperature shall be at least 4 mm in height or it shall be optically magnified so as to appear at least 4 mm in height.

(iv) The indicating unit shall provide a clear indicating or warning signal when the measured temperature is outside the specified measuring range.

(v) The indicating unit shall include a self-checking device that meets the requirements of the paragraph 4(2). This device, which may be manual or automatic, shall input a predetermined electrical signal. Failure shall be clearly indicated.

Note : This device checks only the operation of the indicating unit and does not ensure that a temperature measurement is correct. It provides a means of detecting a faulty operation caused by a defective component or other disturbance.

(vi) In the case of a predicting thermometer, the indicating unit shall provide a means of displaying the measured temperature after reaching the thermal equilibrium.

(3) *Complete thermometer*

Note : The reference thermometer is that indicated (either before the test, or before and after the test, as appropriate) by the thermometer probe immersed in the reference water bath according to the paragraph 1 of Annexure A, the temperature being held constant within the working range of the thermometer.

(i) The thermometer shall provide a clear indication or warning signals when the battery voltage is outside the specified limits and it shall meet the requirement specified in paragraph 4(2) when the voltage is within these limits.

(ii) The indicated temperature shall not vary by more than ± 0.1°C from the reference temperature when the temperature of the thermometer casing varies from 10°C to 40°C.

(iii) The indicated temperature shall not vary more than ± 0.1°C from the reference temperature after a thermal shock resulting from an abrupt change in temperature from -5°C to+50°C.

(iv) The indicated temperature shall not vary by more than ± 0.1°C from the reference temperature after storage for 24 hours at -20°C ± 2°C and at 60°C ± 2°C.

(v) The indicated temperature shall not vary by more than ± 0.1°C from the reference temperature after storage at a relative humidity of 91% to 95% at a temperature constant within ± 2°C in the range 20°C to 32°C.

(vi) The indicated temperature shall not vary by more than ± 0.3°C from the reference temperature during exposure to electromagnetic field having a frequency between 150 kHz and 500 MHz and a field strength of 10V/m.

(vii) The indicated temperature shall not vary by more than ± 0.1°C from the reference temperature after fall on to a hard surface from a height of 1m from three different orientations.

(viii) Small and compact complete thermometers shall be water resistant.

6. Practical Instructions

(1) Manufacturers shall provide an operating manual, or instructions, including the following information:—

- description of appropriate uses and means of applications,
- identification of the specified temperature measuring range of the complete thermometer taking into account, if applicable, the specified measuring ranges of both the interchangeable probes and the indicating unit,
- instructions and precautions for cleaning and disinfecting the complete thermometer or the inter-changeable probes,
- identification of components and suitable inter-changeable parts such as probes and

batteries, including nominal voltage, if applicable,

- minimum time for achieving thermal equilibrium,
- description of transition from the predicted temperature-measuring mode into the actual temperature-measuring mode,
- instruction for the self-checking device,
- information on the correct environmental conditions of use, storage, and transport of the thermometer.

(2) Specific information should be provided by the manufacturer, on request, regarding possible sub-standard performance if used under the following conditions:—

- outside the prescribed environmental temperature and humidity range,
- after an accidental mechanical shock.

7. Metrological controls

(1) *Pattern evaluation*

(i) Manufacturers shall provide the following information:—

- location of sensor from tip of probe,
- description and principles of measurements of complete thermometer,
- description of electrical principles and of any necessary equipments provided,
- description of test for self-checking device,
- specified working range for battery,
- nominal and specified temperature measuring ranges,
- nominal values of calibrations data for type of temperature probe, as applicable,
- precautions for cleaning and disinfecting complete thermometer or temperature probes, as appropriate, including test results as specified in paragraph 3 of Annexure B,
- indicating on instrument if a displayed value is calculated,
- test results,
- results of clinical test of time responses [paragraph 4(4) and Annex D],
- operating manual and/or instructions (see clause 6).

(ii) Thermometers shall be subjected to the following tests:—

***Note*:** Requirements for the reference water bath and the test for maximum permissible errors are provided in Annexure A. The performance requirements for the instrument and its major components are provided in paragraphs 4 and 5. Where appropriate, an additional description of required tests is provided in Annexure B.

Probe

- maximum permissible errors [4(2) and paragraph 2(2)(i) of Annexure A]
- long-term thermal stability [5(1)(ii)]
- electrical insulation and water resistance [5(1)(iii) and paragraph 2 of Annexure B].
- location of sensor [5(1)(iv)]
- mechanical strength [5(1)(v)]
- electrical contact resistance of connector [5(1)(vi)]
- cleaning and disinfecting [5(1)(vii) and paragraph 3 of Annexure B]
- stability with changes in temperature of cables [5(1)(viii]

Indicating unit

- maximum permissible errors [4(2) and Annexure A]
- power provided to probe [5(2)(i) and paragraph 1 of Annexure B]
- indication when connected to battery charger [5(2)(ii)]
- indication if the thermometer is outside the specified measuring range [5(2)(iv)]
- self-checking device [5(2)(v)]
- display of predicting thermometer [5(2)(vi)]

Complete thermometer

- maximum permissible errors [4(2) and Annexure A]
- low battery indication [5(3)(i) and paragraph 4 of Annexure B]
- ambient temperature [5(3)(ii) and paragraph 6 of Annexure B]

- thermal shock [5(3)(iii) and paragraph 6 of Annexure B]
- storage temperatures [5(3)(iv)]
- humidity [5(3)(v) and paragraph 7 of Annexure B]
- electromagnetic radiation interference [5(3)(vi) and paragraph 8 of Annexure B]
- mechanical shock [5(3)(vii) and paragraph 9 of Annexure B]
- water resistance of small compact thermometers [5(3)(viii) and Annexure C]
- instructions and precautions for cleaning and disinfecting the complete thermometer or the inter-changeable probes,
- identification of components and suitable inter-changeable parts such as probes and batteries, including nominal voltage, if applicable,
- minimum time for achieving thermal equilibrium by an indicating energy dissipation requirements [5(1)(a) and paragraph 1 of Annexure B]

(iii) A report of the results of tests required in paragraphs 7(1)(ii) and 7(1)(iii) shall be prepared.

(2) *Marks and labels*

(i) Manufacturers shall provide a space for marks and labels.

(ii) Manufacturers shall affix on the thermometer or indicating unit, if separate, the following marks or labels:—

- name and address of manufacturer or supplier, and/or trademark,
- model or type designation, and serial or lot number,
- temperature values or indications given by the self-checking device,
- indication of the orientation or position in sue, where appropriate,
- indication if a displayed value is calculated.

(iii) Inter-changeable temperature probes shall bear the following marks or labels:—

- name and address of manufacture and/or trademark,
- type designation,
- serial or lot number, or relevant manufacturing production data.

(iv) A single-use temperature probe shall be sealed in a package on which the information specified in paragraph 7(2)(iii) and the measuring range shall be indicated. In addition, sufficient space on the package shall be provided for the application of official approval marks. It shall be clear if the package has been opened and the instructions shall stipulate that the user only opens the package immediately before use.

(v) The testing laboratory shall permit the application in a conspicuous place, of the following:—

- pattern approval mark or label, on each complete thermometer or indicating unit and associated temperature probe(s).
- indication of the specified temperature measuring range if the total range of the thermometer is greater.

(3) *Verification*

(i) The laboratory shall examine the information provided by manufacturers as specified in paragraph 6.

(ii) The laboratory shall examine the instrument's pattern approval certificate mark(s) or label(s).

(iii) The laboratory shall carry out any of the tests indicated in paragraph 7(1)(ii) that may be critical for the designated application of the instrument.

Note : The tests indicated in paragraph 2 of Annexure A may be sufficient for verification.

(iv) The laboratory shall provide a verified instrument with a mark or label.

(v) The water resistance of small and compact complete thermometers shall be examined by means of the procedure described in paragraph 2 of Annexure C.

(vi) The laboratory shall indicate the period of validity of the verification.

ANNEXURE A

ESTABLISHING REFERENCE TEMPERATURES AND DETERMINING MAXIMUM PERMISSIBLE ERRORS

(Mandatory)

1. Reference temperatures

(1) A well-regulated and stirred water bath containing at least one litre in volume shall be used

to establish reference temperatures over the measuring range for conducting various performance tests on an instrument. The bath shall be controlled to a temperature stability of better than ± 0.02°C over the specified temperature range and shall not have a temperature gradient greater than ± 0.01°C within its working space at a specified temperature. This temperature gradient shall be assured under all conditions and methods of loading temperature probes.

Note : The water bath described above is referred to as a "reference water bath" in this specification.

(2) A reference thermometer with an expanded uncertainty not greater than 0.03°C (calculated for a coverage factor k = 3) shall be used to determine the temperature of the water bath. The calibration shall be traceable to national measurement standards.

2. Determining maximum permissible errors

(1) *Complete thermometer*

(i) The temperature probe of a complete thermometer shall be immersed in a reference water bath at a constant temperature until temperature equilibrium is established. The temperature indicated by the thermometer shall be compared to that indicated by the reference thermometer. The bath temperature shall then be increased or decreased, the temperature equilibrium re-established, and the measurement process repeated. The difference between the measured and reference temperatures shall meet the requirements for maximum permissible errors as specified in paragraph 4(2).

(ii) The number of measurements at different temperatures depends on the measuring range of the instrument; however, measurements shall be carried out for at least the following number of temperatures within the measuring range:—

Measuring range	*Number of temperatures*
≤ 10°C	3
≥ 10°C	5

(2) *Inter-changeable and single-use probe*

(i) An inter-changeable or single-use probe shall be immersed in a reference water bath as specified in paragraph 2(1)(i) of Annexure A measured physical property of the probe shall be converted to a temperature value by using an appropriate instrument to measure a change in that property as a function of temperature. For a resistance-type probe, an appropriate instrument for measuring its output signal may be an ohm meter that can apply power to the probe at a level below the limit specified in paragraph 5(2)(i) and the temperature value is obtained from the manufacturer's data of resistance versus temperature. The expanded measurement uncertainty of the appropriate instrument shall not be greater than a value equivalent to 0.01°C (calculated for a coverage factor k = 3), referring to the manufacturer's data at a temperature of 37°C. The calibration shall be traceable to national measurement standards. Each temperature value obtained for the probe in this way shall be compared to that indicated by the reference thermometer in the bath. The difference between these temperature values shall meet the requirements for maximum permissible errors as specified in paragraph 4(2).

(ii) The number of measurements required shall be the same as specified in paragraph 2(1)(ii) of Annexure A.

(3) *Indicating unit*

(i) The performance of an indicating unit shall be tested using a device that simulates the relevant physical properties of the appropriate probe type. The expanded measurement uncertainty of the simulating device shall not be greater than a value equivalent to 0.01°C (calculated for a coverage factor k = 3), referring to the manufacturer's data at a temperature of 37°C. The calibration shall be traceable to national measurement standards.

Note : For example, a calibrated decade resistance box may be used to provide a variable resistance to simulate a resistance-type probe. Values of resistance for input to the indicating unit over its specified measuring range shall be selected from the manufacturer's data of resistance versus temperature. Similarly, variable voltage sources may be used to simulate a thermocouple.

(ii) The difference between the temperatures displayed by the indicating unit and the corresponding simulated values of

temperature shall meet the requirements for maximum permissible errors specified in paragraph 4(2).

(iii) The number of measurements shall be the same as specified in paragraph 2(1)(ii) of Annexure A.

ANNEXURE B

BRIEF DESCRIPTION OF INSTRUMENT PERFORMANCE TESTS

(Mandatory)

1. Energy dissipation of a resistance-type interchangeable probe

(1) The probe shall be placed in a reference water bath as specified in paragraph 1(1) of Annexure A at a temperature of 37°C ± 1°C. Measurements shall be carried out at three or more DC currents with the highest power being 2mW. For each applied current, the voltage and current shall be measured.

(2) The equivalent resistance values shall be calculated and then converted to temperature values using the manufacturer's characteristic (resistance versus temperature) table for the probe type. A linear (least-squares fit) curve of temperature as a function of applied power shall be drawn. From this curve, power corresponding to the maximum energy dissipation that will cause a change in indicated temperature by 0.01°C for reusable, interchangeable, or single-use probes shall be determined. This value is the maximum power that may be provided by an indicating unit for the type of probe tested and the manufacturer's specified value shall be equal to or less than the value determined.

2. Electrical insulation resistance of the probe

(1) The resistance of the temperature probe shall be determined at one or more temperatures using the procedure specified in paragraphs 2(1)(i) or 2(2)(ii) of Annexure A. The probe shall then be immersed to a length equal to that intended to be in contact with the body, or 50 mm, whichever is greater, in a physiological saline solution (9.5g of NaCl per litre of distilled water).

(2) After at least one minute, the resistance between the electrical connections of the probe taken together and an electrode immersed in the physiological saline solution shall be measured using an instrument that applies a voltage of 10 V ± 1 V between the probe connections and the electrode. The resistance measured shall be greater than the shunt resistance that would correspond to a change in indicated temperature of 0.02°C.

(3) The probe shall be left in the physiological saline solution for 24 hours, after which its resistance shall be re-measured as specified in paragraph 2(1) of Annexure B. The difference in indicated temperature between measurements shall not be greater than 0.02°C.

3. Cleaning and disinfecting the probe

(1) The applied part of the temperature probe or of the complete compact thermometer shall be cleaned and disinfected twenty times according to the manufacturer's instructions.

(2) After cleaning and disinfecting as specified in paragraph 3(1) of Annexure B, the requirements of paragraph 4(2) shall be met.

4. Low battery indication

Note : Paragraphs 4 to 9 of Annexure B it is to be understood that the temperature indication of a complete thermometer shall be generated within the measuring range by inserting the probe in a reference water bath or in another bath with similar qualities. The temperature indication of an indicating unit designed for use with interchangeable probes shall be generated by replacing the probe by an auxiliary device, such as an appropriate precision resistor simulating the temperature of a resistance probe. The reference temperature indication is that obtained under the reference conditions described in paragraph 4(3).

(1) The battery shall be replaced by a variable DC voltage source.

(2) The voltage of the source shall be reduced unit a low battery indication or warning signal is activated at the level specified by the manufacturer. The test shall be carried out at three different temperatures; 37°C ± 1°C, and the lower and upper limits of the measuring range.

5. Ambient temperature

(1) The complete thermometer or indicating unit shall be placed in a test chamber, and the temperature of the chamber varied from 10°C to 40°C with each temperature setting constant within ± 2°C. Sufficient time shall be allowed at each temperature setting to permit the complete thermometer or indicating unit to reach thermal equilibrium with the chamber.

(2) At each temperature tested, the requirements specified in paragraph 4(2) shall be met.

6. Thermal shock

(1) The indicating unit shall be placed in a test chamber at - 5°C ± 2°C.

(2) After thermal equilibrium has been established, the complete thermometer or indicating

unit shall be placed in a test chamber at 50°C ± 2°C until thermal equilibrium has been established and all traces of condensed moisture have evaporated.

(3) The process described in paragraphs 6(1) and 6(2) of Annexure B shall be performed five times.

(4) The indicating unit shall be allowed to achieve thermal equilibrium at room temperature after which the indicated temperature shall not change by more than ± 0.1°C as a result of exposure to the thermal shocks described in paragraphs 6(1) and 6(2) by Annexure B.

Note : Thermal equilibrium may be achieved more quickly and completely by opening the casing of the thermometer, if possible.

7. Humidity

(1) The complete thermometer or indicating unit shall be stabilized at a temperature *t* within the range 20°C to 32°C for 4 hours or more. During this time, t shall remain constant within ± 2°C.

(2) After achieving a stable temperature as specified in paragraph 7(1) of Annexure B, the complete thermometer or indicating unit shall be placed in a humidity test chamber containing air at a temperature between *t* and *t* + 4°C and a relative humidity between 91% and 95% for a period of 48 hours.

(3) After exposure as specified in paragraph 7(2) of Annexure B, the complete thermometer or indicating unit shall be removed from the test chamber and allowed to stabilize at room temperature for 48 hours. The indicated temperature shall not vary by more than ± 0.1°C as a result of this test.

8. Electro-magnetic radiation interference

(1) The complete thermometer or indicating unit shall be exposed to an electromagnetic field with a field strength of 10 V/m at frequencies between 150 kHz and 500 MHz modulated by a 1 kHz sine wave and 80% amplitude modulation.

(2) The specific field strength shall be established prior to testing and without the instrument being placed in the electro-magnetic field. The field strength may be generated as follows :—

- a strip line for low frequencies (below 3 MHz) or in some cases 150 MHz) for small instruments,
- dipole antennas, or antennas with circular polarization, placed 1m from the instrument at higher frequencies.

(3) The field shall be generated with two orthogonal polarizations and then slowly scanned through the frequency range. Antennas with circular polarization may be used to generate the electro-magnetic field without a change in their positions. The test shall be carried out in a shielded enclosure to comply with international laws prohibiting interference with radio communications, but care shall be taken to minimize reflections.

(4) During the test, the requirements specified in paragraph 5(3)(vi) shall be met.

9. Mechanical shock

(1) The complete thermometer or indicating unit shall be allowed to fall from a height of 1m on to a hard surface (for example, a block of hard wood of density greater than 700 kg/m3 and of suitable size lying flat on a rigid base). The drop shall be performed once for three different orientations of the complete thermometer or indicating unit.

(2) After the test, the requirements specified in paragraph 5(3)(vii) shall be met.

ANNEXURE C

TEST OF WATER RESISTANCE OF COMPLETE THERMOMETERS
(Mandatory)

1. Pattern approval

(1) A total of 10 samples shall be tested.

(2) The battery casing shall be opened and closed several times before the tests if the thermometer is equipped with replaceable batteries.

(3) The thermometer shall be totally immersed in an equivalent physiological solution (9.5g NaCl per litre of distilled water) to a depth of 15 cm and at temperatures of 50°C and 20°C for the following periods of time and in the sequence indicated :—

- 1 hour at 50°C ± 2°C
- 1 hour at 20°C ± 2°C
- 24 hours at 50°C ± 2°C
- 24 hours at 20°C ± 2°C

(4) The indicated values shall be measured at two or more temperatures near the lower and upper limit of the measuring range before the first immersion and after the second and last immersion. The thermometers shall have reached equilibrium with room temperature before recording the indicated values. After the last immersion, the thermometers shall be stored for 14 days in air at room temperature before taking the last measurement.

(5) The test may be discontinued if it is obvious that water has penetrated into the casing of a thermometer.

(6) The thermometer pattern shall be declared to be water resistant if, for nine out of ten thermometers, the difference in indicated

temperatures for any individual thermometer is less than—

- 0.04°C for thermometers with a minimum digital increment of 0.01°C (class I),
- 0.1°C for thermometers with a minimum digital increment of 0.1°C (class II).

2. Verification

(1) The thermometers shall be totally immersed in an equivalent physiological solution at a temperature of 50°C ± 2°C to a depth of 15 cm for one hour, after which they shall be immersed for another hour under same conditions but at a temperature of 20°C ± 2°C. Before the first immersion and after the second immersion, the indicated values shall be measured at two temperatures.

(2) A thermometer shall be accepted if the performance requirements specified in paragraph 1(6) are met.

ANNEXURE D

CLINICAL TEST OF RESPONSE TIME

(Mandatory)

1. Non-predicting clinical electrical thermometers

The minimum time for achieving thermal equilibrium at each appropriate body site shall be determined on the basis of testing at least ten persons.

2. Predicting (calculating) clinical electrical thermometers

(1) The difference between the displayed calculated temperature and the corresponding measured temperature at thermal equilibrium of a calculating (predicting) thermometer shall be determined on the basis of testing at least 100 persons. The predicted temperature of each person at an appropriate body site shall be determined by the method specified by the manufacturer. After the predicted indication, the thermometer shall remain at the site for measuring and indicating the actual temperature of its sensor. The total time allowed shall be sufficient to attain thermal equilibrium. The difference in the first and second indicated temperatures for 95% of the persons tested shall not be more than 0.2°C.

(2) If an oral (sublingual) test has been carried out, the minimum number of persons required for rectal measurement shall be twenty.

PART VII

MANOMETERS OF INSTRUMENTS FOR MEASURING ARTERIAL BLOOD PRESSURE (SPHYGMOMANOMETARS)

PART VII-A

NON-INVASIVE MECHANICAL SPHYGMOMANOMETERS

1. Scope

This Part specifies general performance, efficiency and mechanical and electrical safety requirements, including test methods for type approval, for non-invasive mechanical sphygmomanometers and their accessories which, by means of an inflatable cuff, are used for the non-invasive measurement of arterial blood pressure. The application of the cuff is not limited to a particular extremity of the human body (e.g. the upper arm).

Within the scope of this specification are sphygmomanometers with a mechanical pressure sensing element and display, used in conjunction with a stethoscope or other manual methods for detecting Korotkoff sounds and for cuff inflation.

Note : Luer locks shall not be used with these devices.

2. Terminology

(1) Bladder :

The inflatable component of the cuff is called bladder.

(2) Pressure in a blood vessel :

It refers to pressure in the arterial system of the body.

(3) Cuff :

It is that component of the sphygmomanometer, comprising a bladder and a sleeve, which is wrapped around the limb of the patient.

(4) Diastolic blood pressure (value) :

The minimum value of the arterial blood pressure as a result of relaxation of the systemic ventricle is called diastolic blood pressure.

Note : Because of hydrostatic effects, this value should be measured with the cuff at the heart level.

(5) *Mean arterial blood pressure (value)* :

It is the value of the integral of one cycle of the blood pressure curve divided by the time of one heart beat period.

Note : Because of hydrostatic effects, this value should be measured with the cuff at the heart level.

(6) *Non-invasive blood pressure measurement* :

Indirect measurement of the arterial blood pressure without arterial puncture is called non-invasive blood pressure measurement.

(7) *Pneumatic system* :

A system that includes all pressurized and pressure-controlling parts such as cuff, tubing, connectors, valves, transducer and pump is called pneumatic system.

(8) *Sleeve* :

It is essentially inelastic part of the cuff that encloses the bladder.

(9) *Sphygmomanometer* :

It is an instrument used for the non-invasive measurement of the arterial blood pressure.

(10) *Systolic blood pressure (value)* :

The maximum value of the arterial blood pressure as a result of the contraction of the systemic ventricle is called systolic blood pressure.

Note : Because of hydrostatic effects, this value should be measured with the cuff at the heart level.

(11) Mechanical sphygmomanometer :

The sphygmomanometer which uses either a mercury or an aneroid manometer or another mechanical measuring device for the non-invasive measurement of the arterial blood pressure by means of an inflatable cuff, is called mechanical sphygmomanometer.

(12) Auscultatory method :

It is that technique whereby sounds (known as Korotkoff sounds) are heard over an occluded artery as the occluding pressure is slowly released, the appearance of sounds coinciding with the systolic blood pressure and the disappearance of sounds with the diastolic blood pressure in adults. In children under age of 13, "k4" (i.e. 4th phase Korotkoff sound) may be appropriate.

(13) Deflation valve :

The valve used for controller exhaust of the pneumatic system during measurement.

(14) Rapid exhaust valve :

The valve used for rapidly exhausting the pneumatic system.

(15) Tamper proofing :

It is that means of preventing the user from gaining easy access to the measuring mechanism of the device.

3. Description of the category of instrument

The basic components of a sphygmomanometer are a cuff and bladder that can be wrapped around a patient's limb, a manual system for applying and releasing pressure to the bladder, and a means of measuring and displaying the instantaneous pressure in the bladder. Mechanical sphygmomanometers, which use either mercury or an aneroid manometer or another mechanical measuring device for the non-invasive measurement of the arterial blood pressure by means of an inflatable cuff.

Notes : Components of these devices are manometer, cuff, valve for deflation (often in combination with rapid exhaust valve), hand pump or electro-mechanical pump and connection hoses. These devices may also contain electro-mechanical components for pressure control.

4. Units of measurement

The blood pressure shall be indicated either in kilo-Pascal (kPa) or in millimetres of mercury (mmHg).

5. Metrological requirements

(1) Maximum permissible errors of the cuff pressure indication

(i) *Under ambient conditions*

For any set of conditions within the ambient temperature range of 15°C to 25°C and the relative humidity range of 20% to 85%, both for increasing and for decreasing pressure, the maximum permissible error for the measurement of the cuff pressure at any point of the scale range shall be ± 0.4 kPa (± 3 mmHg) in case of verifying the first time and ± 0.5 kPa (± 4 mmHg) for sphygmomanometers in use. Testing shall be carried out in accordance with paragraph 1 of Annexure A.

(ii) *Under storage conditions*

The sphygmomanometer shall maintain the maximum permissible error requirements specified in this paragraph 5(1)(i) after storage for 24 h at a temperature of –20°C and for 24h at a temperature of 70°C and a relative humidity of 85% (non-condensing). Testing shall be carried out in accordance with paragraph 3 of Annexure A.

(iii) *Under varying temperature conditions*

For the ambient temperature range of 10°C to 40°C and the relative humidity of 85% (non-condensing), the difference of the cuff pressure indication of the sphygmomanometer shall not exceed ± 0.4 kPa (± 3 mmHg). Testing shall be carried out in accordance with paragraph 2 of Annexure A.

6. Technical requirements

(1) Technical requirements for the cuff and bladder

The cuff shall contain a bladder. For

reusable cuffs the manufacturer shall indicate the method for cleaning in the accompanying documents.

Note : The optimum bladder size is one with dimensions such that its width is 40% of the limb circumference at the midpoint of the cuff application, and its length is at least 80%, preferably 100%, of the limb circumference at the midpoint of cuff application. Use of the wrong size can affect the accuracy of the measurement.

(2) Technical requirements for the pneumatic system

(i) *Air leakage*

Air leakage shall not exceed a pressure drop of 0.5 kPa/min (4 mmHg/min).

Testing shall be carried out in accordance with paragraph 4 of Annexure A.

(ii) *Pressure reduction rate*

Manually operated deflation valves shall be capable of adjustment to a deflation rate from 0.3 kPa/s to 0.4 kPa/s (2 mmHg/s to 3 mmHg/s). Manually operated deflation valves shall be easily adjusted to these values. Deflation valves shall be tested in accordance with paragraph 5 of Annexure A.

(iii) *Rapid exhaust*

During the rapid exhaust of the pneumatic system, with the valve fully opened, the time for the pressure reduction from 35 kPa to 2 kPa (260 mmHg to 15 mmHg) shall not exceed 10s.

Testing shall be carried out in accordance with paragraph 6 of Annexure A.

(3) Technical requirements for the pressure indicating devices

(i) *Nominal range and measuring range*

The nominal range shall be equal to the measuring range.

The nominal range for the cuff gauge pressure shall extend from 0 kPa to at least 35 kPa (0 mmHg to at least 260 mmHg).

(ii) *Analogue indication*

(a) Scale

The scale shall be designed and arranged so that the measuring values can be read clearly and are easily recognized. Testing shall be carried out by visual inspection.

(b) First scale mark

The graduation shall begin with the first scale mark at 0 kPa (0 mmHg).

Testing shall be carried out by visual inspection.

(c) Scale interval

The scale interval shall be—

- 0.2 kPa for a scale graduated in kPa; or
- 2 mmHg for a scale graduated in mmHg. Each fifth scale mark shall be indicated by greater length and each tenth scale mark shall be numbered. An example of a scale in mmHg is given in Figure 1. Testing shall be carried out by visual inspection.

(d) Scale spacing and thickness of the scale marks

The distance between adjacent scale marks shall be not less than 1.0 mm. The thickness of the scale marks shall not exceed 20% of the smallest scale spacing.

All scale marks shall be of equal thickness.

Testing shall be carried out in accordance with paragraph 7 of Annexure A.

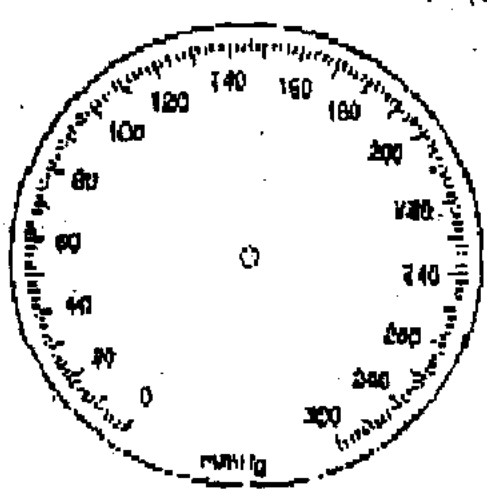

(*Figure 1 Example of an aneroid manometer scale division in mmHg without a tolerance zone at zero*)

474 GI/11-149

(4) Additional technical requirements for mercury manometers

(i) *Internal diameter of the tube containing mercury*

The nominal internal diameter of the mercury tube shall be at least 3.5 mm. The tolerance on diameter shall not exceed ± 0.2 mm.

Testing shall be carried out in accordance with paragraph 8 of Annexure A.

(ii) *Portable devices*

A portable device shall be provided with an adjusting or locking mechanism to secure it in the specified position of use.

Testing shall be carried out by visual inspection.

(iii) *Devices to prevent mercury from being spilled during use and transport*

A device shall be placed in the tube to prevent mercury from being spilled during use and transport (for example: stopping device, locking device, etc.). This device shall be such that when the pressure in the system drops rapidly from 27 kPa to 0 kPa (from 200 mmHg to 0 mmHg), the time taken for the mercury column to fall from 27 kPa to 5 kPa (from 200 mmHg to 40 mmHg) shall not exceed 1.5 s. This time is known as the "exhaust time".

Testing shall be carried out in accordance with paragraphs 9 and 10 of Annexure A.

(iv) *Quality of the mercury*

(a) The mercury shall have a purity of not less than 99.99% according to the declaration of the supplier of the mercury.

(b) The mercury shall exhibit a clean meniscus and shall not contain air bubbles.

(v) *Graduation of the mercury tube*

Graduations shall be permanently marked on the tube containing mercury.

If, numbered at each fifth scale mark, the numbering shall be alternately on the right and left-hand side of, and adjacent to, the tube.

Testing shall be carried out by visual inspection.

(5) Additional technical requirements for aneroid manometers

(I) *Scale mark at zero*

If a tolerance zone is shown at zero it shall not exceed ± 0.4 kPa (± 3 mmHg) and shall be clearly marked.

A scale mark at zero shall be indicated.

Note : Graduations within the tolerance zone are optional.

Testing shall be carried out by visual inspection.

(II) *Zero*

The movement of the elastic sensing element including the pointer shall not be obstructed within 0.8 kPa (6 mmHg) below zero.

Neither the dial nor the pointer shall be adjustable by the user. Testing shall be carried out by visual inspection.

(iii) *Pointer*

The pointer shall cover between 1/3 and 2/3 of the length of the shortest scale mark of the scale. At the place of indication it shall be not thicker than the scale mark. The distance between the pointer and the dial shall not exceed 2 mm. Testing shall be carried out by visual inspection.

(iv) *Hysterisis error*

The hysterisis error throughout the pressure range shall be within the range 0 kPa to 0.5 kPa (0 mmHg to 4 mmHg). Testing shall be carried out in accordance with paragraph 11 of Annexure A.

(v) *Construction and materials*

The construction of the aneroid manometer and the material for the elastic sensing elements shall ensure an adequate stability of the measurement. The elastic sensing elements shall be aged with respect to pressure and temperature. After 10,000 alternating pressure cycles the change in the pressure indication of the aneroid manometer shall be not more than 0.4 kPa (3 mmHg) throughout the pressure range.

Testing shall be carried out in accordance with paragraph 12 of Annexure A.

(6) Safety requirements

(I) *Resistance to vibration and shock*

The sphygmomanometer shall comply with the requirements of paragraph 5(1)(i).

(ii) *Mechanical safety*

It shall be possible to abort the blood pressure measurement at any time by activating the manual rapid exhaust valve, which shall be easily accessible.

(iii) *Tamper proofing*

Tamper proofing of the manometer shall be achieved by requiring the use of a tool or breaking a seal.

Testing shall be carried out by visual inspection.

7. Metrological controls

(1) Model approval

At least three samples of a new type of sphygmomanometer shall be tested. The tests to verify conformity to metrological and technical requirements shall be carried out according to Annexure A.

(2) Verification

(i) *Initial verification*

At initial verification the requirements of paragraphs 5(1)(i), 6(2)(i) and 6(4)(iv) shall be fulfilled.

Testing shall be carried out according to paragraphs 1, 4 and 11 of Annexure A.

(ii) *Subsequent verification*

Each instrument of an approved type of sphygmomanometer shall be verified every 2 years or after repair. Requirement of paragraphs 5(1)(i) and 6(2)(i) shall be fulfilled and tests must be carried out according to paragraph 1 of Annexure A.

(3) Sealing

(i) Control marks will be put on lead seals for which corresponding punched screws shall be attached whenever necessary. These seals shall prevent, without destruction of the control marks:

- in the case of mercury manometers: the separation of reservoir and scale;
- in the case of all other manometers: the opening of the casing.

(ii) If the construction of the instrument guarantees security against any interference, the metrological control marks or the security marks may be attached in form of labels.

(iii) All seals shall be accessible without using a tool.

(4) Marking of the device

The device shall be marked with the following information:—

- name and/or trademark of manufacturer;
- serial number and year of fabrication;
- measuring range and measuring unit;
- model approval number;
- centre of the bladder, indicating the correct position for the cuff over the artery; and
- marking on the cuff indicating the limb circumference for which it is appropriate in paragraph 6(1).
- The following additional markings are required for mercury manometers:—
- indication of the internal nominal diameter and the tolerance of the tube containing mercury in paragraph 6(4)(i).

(5) Manufacturer's information

(i) The manufacturer's instruction manual shall contain the following information:—

(a) explanation of the operating procedures which are important for correct application (such as the selection of the appropriate cuff size, positioning of the cuff and adjustment of the pressure reduction rate);

(b) a warning to users of equipment intended for use in environments employing intravascular fluid systems not to connect the output of the blood pressure measuring device to such systems as air might inadvertently be pumped into a blood vessel if, for example, Luer locks were used;

(c) methods for cleaning reusable cuffs;

(d) nature and frequency of the maintenance required to ensure that the device operates correctly and safely at all times; it is recommended that the performance should be checked at least every 2 years and after maintenance and repair, by re-verifying at least the requirements in paragraphs 5(1)(i), 6(2)(i) (testing

at least at 7 kPa (50 mmHg) and 27 kPa (200 mmHg) and paragraph 6(4)(iv);

(e) internal nominal diameter and tolerance of the tube containing mercury; and

(f) detailed instructions for the safe handeling of mercury.

ANNEXURE A

TEST PROCEDURES (Mandatory)

1. Method of test for the maximum permissible errors of the cuff pressure indication

(1) Apparatus

(i) rigid metal vessel with a capacity of 500 ml ± 5 %;

(ii) calibrated reference manometer with an uncertainty less than 0.1 kPa (0.8 mmHg);

(iii) pressure generator, e.g. ball pump (hand pump) with a deflation valve;

(iv) T-piece connectors and hoses.

(2) Procedure

Replace the cuff with the vessel. Connect the calibrated reference manometer by means of a T-piece connector and hoses to the pneumatic system (see Figure 2). After disabling the electro-mechanical pump (if fitted), connect the pressure generator into the pressure system by means of another T-piece connector. Carry out the test in pressure steps of not more than 7 kPa (50 mmHg) between 0 kPa (0 mmHg) and the maximum pressure of the scale range.

(3) Expression of results

Express the results as the differences between the indicated pressure of the manometer of the device to be tested and the corresponding readings of the reference manometer.

2. Method of test for the influence of temperature on cuff pressure Indication

(1) Apparatus

(i) apparatus as specified in paragraph 1(1) of this Annexure plus

(ii) a climatic chamber.

(2) *Procedure*

Replace the cuff with the vessel. Connect the calibrated reference manometer by means of a T-piece connector to the pneumatic system (see Figure 3). After disabling the electromechanical pump (if fitted) connect the additional pressure generator into the pneumatic system by means of another T-piece connector.

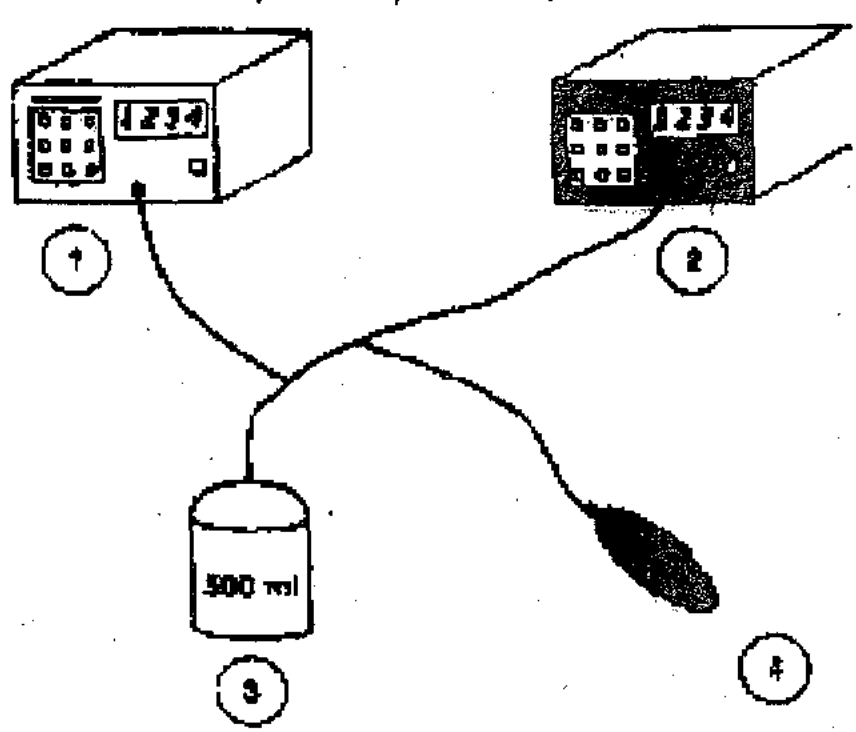

1 - Reference manometer 2 - Manometer of the device to be tested

3 - Metal vessel 4 - Pressure generator

Figure 2. Measurement system for determining the limits of error of the cuff pressure indication

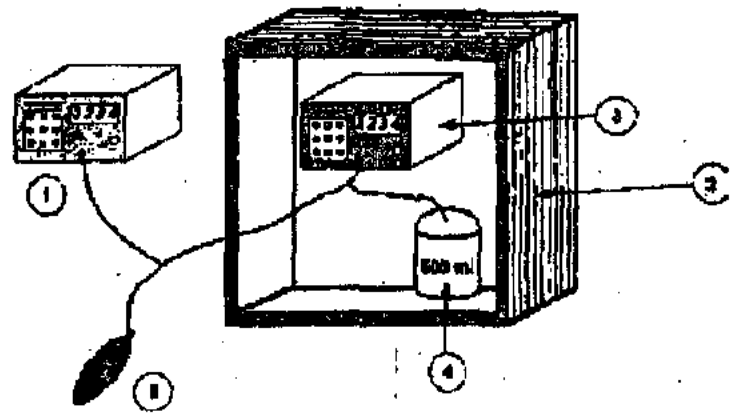

1 - Reference manometer

2 - Climatic chamber

3 - Manometer of the device to be tested

4 - Metal vessel

5 - Pressure generator

Figure 3. Measurement system for determining the influence of temperature

For each of the following combinations of temperature and humidity, condition the device for at least 3 h in the climatic chamber to allow the device to reach steady conditions:—

- 10°C ambient temperature, 85% relative humidity (non-condensing);
- 20°C ambient temperature, 85% relative humidity (non-condensing);
- 40°C ambient temperature, 85% relative humidity (non-condensing).

Carry out the test of the cuff pressure indication as described in paragraph 1(2) of this Annexure for each of the combinations of temperature and humidity mentioned above.

(3) *Expression of results*

Express the results as the differences between the indicated pressure of the manometer of the device to be tested and the corresponding readings of the reference manometer at the relevant temperature value.

3. Method of test for the maximum permissible error after storage

(1) *Apparatus*

- apparatus as specified in paragraph 1(1) of this Annexure.

(2) *Procedure*

Replace the cuff with the vessel. Connect the calibrated reference manometer by means of a T-piece connector to the pneumatic system (see Figure 3). After disabling the electro-mechanical pump (if fitted), connect the additional pressure generator into the pneumatic system by means of another T-piece connector.

Store the instrument under test for 24 h at a temperature of −20°C and subsequently for 24 hours at a temperature of 70°C and a relative humidity of 85% (non-condensing).

Note : This is one test and not two separate tests.

Carry out the test in pressure steps of not more than 7 kPa (50 mmHg) between 0 kPa (0 mmHg) and the maximum pressure of the scale range.

(3) Expression of results

Express the results as the differences between the indicated pressure of the manometer of the device to be tested and the corresponding readings of the reference manometer.

4. Method of test for air leakage of the pneumatic system

(1) Apparatus

- rigid metal cylinder of an appropriate size;
- pressure generator, e.g. ball pump (hand pump) with a deflation valve;
- time measuring device.

(2) Procedure

Wrap the cuff around the cylinder.

Note : Electro-mechanical pumps which are part of the device may be used for the test.

Carry out the test over the whole measuring range at least five equally spaced pressure steps

(e.g.) 7 kPa (50 mmHg), 13 kPa (100 mmHg), 20 kPa (150 mmHg), 27 kPa (200 mmHg) and 34 kPa (250 mmHg). Test the air leakage over a period of 5 min and determine the measured value from this.

(3) Expression of results

Express the air leakage as the rate of the pressure loss per minute.

5. Method of test for pressure reduction rate for deflation valves

(1) Apparatus

- T-piece connector;
- calibrated reference manometer with signal output and an uncertainty less than 0.1 kPa (0.8 mmHg);
- artificial limbs [see Notes under paragraph 5(2) of this Annexure].
- recording unit.

(2) Procedure

Measure the pressure reduction rate either on human limbs or artificial limbs.

***Note* 1 :** The intention is to use artificial limbs, but as these are still under consideration, measurements performed with human volunteers are acceptable.

***Note* 2 :** It is intended that the properties of the artificial limbs reflect some elastic properties of human limbs.

Because cuff deflation rate may be influenced by the way that a cuff is applied, the cuff should be applied and removed for each of at least ten repeated measurements, on at least two different limb sizes. These two limb sizes should be equal to the upper and lower limits of limb circumferences for which a particular size of cuff is recommended to be used. A resetting of the deflation valve is permitted during the test.

Connect the calibrated reference manometer to the cuff by means of a T-piece connector. Connect the output of the calibrated reference manometer to the recording unit.

Plot the pressure reduction in the form of a pressure curve as a function of time.

(3) Expression of results

Determine the rate of pressure reduction by graphical evaluation (by drawing tangents) at the pressure values of 8.0 kPa (60 mmHg), 16.0 kPa (120 mmHg) and 24.0 kPa (180 mmHg). The pressure reduction rate is the mean value calculated separately for these three pressure values and for the various limb circumferences.

6. Method of test for the rapid exhaust valve

(1) Apparatus

- rigid metal vessel, with a capacity of 500 ml ± 5 %;
- calibrated reference manometer, with an uncertainty less than 0.1 kPa (0.8 mmHg);
- T-piece connector;
- time measuring device.

(2) Procedure

Carry out the test with the vessel in place of the cuff. Connect the calibrated reference manometer by means of a T-piece to the pneumatic system. Inflate to the maximum pressure and open the rapid exhaust valve.

(3) Expression of results

Measure the time between the pressure values specified in paragraph 6(2)(iii).

7. Method of test for the thickness of the scale marks and the scale spacing

(1) Apparatus

- scaled magnifying lens or similar device.

(2) Procedure

Determine the thickness of the scale marks and the scale spacing using the scaled magnifying lens.

8. Method of test for the internal diameter of the mercury tube

(1) Apparatus

- limit plug gauges or similar devices, with a tolerance less than 0.05 mm.

(2) Procedure

Test the nominal internal diameter of the tube at each end by using the limit plug gauge.

9. Method of test for security against mercury losses

(1) Apparatus

- collecting vessel of an adequate size;
- calibrated reference manometer, with an uncertainty less than 0.1 kPa (0.8 mmHg);
- T -piece connector;
- pressure generator, e.g. ball pump (hand pump) with a deflation valve.

(2) Procedure

Place the sphygmomanometer to be tested in the collecting vessel. Connect the pressure generator and a T-piece connector attached to a calibrated reference manometer directly to the hose leading to

the mercury reservoir. Use the pressure generator to raise the pressure in the manometer to 13.3 kPa (100 mmHg) greater than the maximum indicated scale reading on the test manometer. Maintain this pressure for 5s and then release the pressure in the system.

Check that no mercury has spilled.

10. Method of test for the influence of the mercury stopping device

(1) Apparatus

- time measuring device, e.g. a stopwatch or an electronic timing device;
- pressure generator, e.g. ball pump (hand pump) with a deflation valve.

(2) Procedure

Connect the pressure generator directly to the hose leading to the mercury reservoir, i.e. without connecting a cuff. When a gauge pressure of more than 27 kPa (200 mmHg) has been reached, occlude the tube and remove the pressure generator.

After removing the occlusion from the tube, measure the time taken for the mercury column to fall from the 27 kPa (200 mmHg) mark to the 5 kPa (40 mmHg) mark.

Check that the exhaust time does not exceed 1.5 s.

11. Method of test for the hysterisis error of the aneroid manometer

(1) Apparatus

(i) rigid metal vessel, with a capacity of 500 ml ± 5%;

(ii) calibrated reference manometer, with an uncertainty less than 0.1 kPa (0.8 mmHg);

(iii) pressure generator, e.g. ball pump (hand pump) with a deflation valve;

(iv) T-piece connectors.

(2) *Procedure*

Replace the cuff with the vessel. Connect the calibrated reference manometer by means of a T-piece connector to the pneumatic system. After disabling the electro-mechanical pump (if fitted) connect the additional pressure generator into the pneumatic system by means of another T-piece connector.

Test the device with increasing pressure steps of not more than 7 kPa (50 mmHg) to the scale maximum, at which point hold the pressure for 5 minutes and then decrease it by the same steps. Disconnect the calibrated reference manometer during the 5 minutes at maximum pressure.

(3) Expression of results

Express the results as the difference between the indicated values on the manometer at the same test pressure steps when increasing the pressure and when decreasing the pressure.

12. Method of test for the construction

(1) Apparatus

- alternating pressure generator, which generates a sinusoidal pressure variation between 3 kPa and 30 kPa (20 mmHg and 220 mmHg) at a maximum rate of 60 cycles per minute.

(2) Procedure

Carry out the procedure specified in paragraph 1 of this Annexure.

Connect the aneroid manometer directly to the alternating pressure generator and perform 10,000 alternating pressure cycles.

One hour after the stress test carry out the procedure as specified in paragraph 1 of this Annexure at the same test pressure levels as before the stress test.

(3) Expression of results

Express the results as the differences between the indicated values on the manometer at the same test pressure steps before and after the stress test.

PART VII-B

NON-INVASIVE AUTOMATED SPHYGMOMANOMETERS

1. Scope

This specification gives general performance, efficiency and mechanical and electrical safety requirements, including test methods for type approval, for non-invasive electronic or automated sphygmomanometers and their accessories which, by means of an inflatable cuff; are used for the non-invasive measurement of arterial blood pressure.

This specification only applies to devices measuring at the upper arm, the wrist or the thigh.

Note : Luer locks shall not be used with these devices [see paragraphs 6(11)(iii) and 7(5)].

2. Terminology

(1) Bladder :

It is the inflatable component of the cuff.

(2) Pressure in a blood vessel :

It refers to pressure in the arterial system of the body.

(3) Cuff :

It is that component of the sphygmomanometer,

comprising a bladder and a sleeve, which is wrapped around the limb of the patient.

(4) Diastolic blood pressure (value) :

The minimum value of the arterial blood pressure as a result of relaxation of the systemic ventricle.

Note : Because of hydrostatic effects, this value should be measured with the cuff at the heart level.

(5) Mean arterial blood pressure (value) :

It is the value of the integral of one cycle of the blood pressure curve divided by the time of one heart beat period.

Note : Because of hydrostatic effects, this value should be measured with the cuff at the heart level.

(6) Non-invasive blood pressure measurement :

Indirect measurement of the arterial blood pressure without arterial puncture is called non-invasive blood pressure measurement.

(7) Pneumatic system :

A system that includes all pressurized and pressure-controlling parts such as cuff, tubing, connectors, valves, transducer and pump is called pneumatic system.

(8) Sleeve :

It is essentially inelastic part of the cuff that encloses the bladder.

(9) Sphygmomanometer :

It is an instrument used for the non-invasive measurement of the arterial blood pressure.

(10) Systolic blood pressure (value) :

The maximum value of the arterial blood pressure as a result of the contraction of the systemic ventricle is called systolic blood pressure.

Note : Because of hydrostatic effects, this value should be measured with the cuff at the heart level.

(11) Electro-mechanical blood pressure measuring system :

It is that system that consists of:

(i) at least one cuff, which is connected to the pneumatic system;

(ii) at least one electro-mechanical transducer to measure cuff pressure;

(iii) at least one measured value display; and

(iv) if needed, signal inputs and outputs.

(12) Electro-mechanical pressure transducer :

It is that component that transforms pressure signals into electrical signals.

(13) Oscillometric method :

It is that method, wherein a cuff is placed on the limb and the pressure in the cuff is increased until the blood flow in the artery is interrupted and then the pressure in the cuff is slowly reduced.

Note : During the inflation and deflation of the cuff small pressure changes (oscillations) occur in the cuff as a result of the arterial blood pressure pulses. These oscillations, which first increase and then decrease, are detected and stored together with the corresponding cuff pressure values in the measurement system. With these stored values the systolic, diastolic and mean arterial blood pressure values can be mathematically derived using an appropriate algorithm. It is possible to carry out the measurement during the inflation phase.

(14) Zero setting :

The procedure that corrects a deviation of the pressure reading to 0 kPa (0 mmHg) at atmospheric pressure [gauge pressure: 0 kPa (0 mmHg)] is called zero setting.

(15) Patient simulator :

Device for simulating the oscillometric cuff pulses and/or auscultatory sounds during inflation and deflation.

Note : This device is not used for testing accuracy but is required in assessing stability of performance.

(16) Auscultatory method :

It is that technique whereby sounds (known as Korotkoff sounds) are heard over an occluded artery as the occluding pressure is slowly released, the appearance of sounds coinciding with the systolic blood pressure and the disappearance of sounds with the diastolic blood pressure. In children under the age of 13, "k4" (i.e. 4th phase Korotkoff sound) may be appropriate.

(17) Self-linearizing deflation valve :

The valve used for controlled linearizing exhaust of the pneumatic system during measurement.

3. Description of the category of instrument

The basic components of a sphygmomanometer are a cuff and bladder that can be wrapped around a patient's limb, a system for applying and releasing pressure to the bladder, and a means of measuring and displaying the instantaneous pressure in the bladder.

4. Units of measurement

The blood pressure shall be indicated either in kilo-pascals (kPa) or in millimetres of mercury (mmHg).

5. Metrological requirements

(1) Maximum permissible errors of the cuff pressure indication

For any set of conditions within the ambient temperature range of 15°C to 25°C and the relative humidity range of 20% to 85%, both for increasing and for decreasing pressure, the maximum permissible error for the measurement of the cuff pressure at any point of the scale range shall be ± 0.4 kPa (± 3 mmHg) in case of verifying the first time and ± 0.5 kPa (± 4 mmHg) for sphygmomanometers in use.

Testing shall be carried out in accordance with para 2 of Annexure A.

*(2) Maximum permissible errors of the overall system as measured by clinical tests**

The following maximum permissible errors shall apply for the overall system:—

- maximum mean error of measurement : ± 0.7 kPa ± 5 mmHg);
- maximum experimental standard deviation : 1.1 kPa (8 mmHg).

(3) Environmental performance

(i) *Storage* :

Blood pressure measuring systems shall maintain the requirements specified after storage for 24 h at a temperature of -5°C and for 24 hours at a temperature of 50°C and a relative humidity of 85% (non-condensing).

Testing shall be carried out at environmental conditions in accordance with paragraph 2 of Annexure A after the test sample has been placed for 24 h at a temperature of -5°C and immediately afterwards for 24 hours at a temperature of 50°C in a climatic chamber.

Note : Integrated multi-parameter monitors may contain components which may be damaged during storage. The general temperature range as stated in para 3 of Annexure A has therefore been reduced.

(ii) *Temperature, relative humidity* :

For the ambient temperature range of 10°C to 40°C and a relative humidity of 85% (non-condensing), the difference of the cuff pressure indication of the sphygmomanometer shall not exceed ± 0.4 kPa (± 3 mmHg).

Testing shall be carried out in accordance with paragraphs 2 and 11 of Annexure A.

The signal processing for the determination of the blood pressure values shall not be influenced within the range of temperature and relative humidity. For any set of conditions all the deviations between the reference pressure and the indicating cuff pressure of the instrument must be less than or equal to the maximum permissible error.

6. Technical requirements

(1) *General* :

Equipment, or parts thereof, using materials or having forms of construction different from those detailed in this Recommendation shall be accepted if it can be demonstrated that an equivalent degree of safety and performance is obtained.

(2) *Technical requirements for the cuff and bladder* :

The cuff shall contain a bladder. For reusable cuffs the manufacturer shall indicate the method for cleaning in the accompanying documents.

Note : The optimum bladder size is one with dimensions such that its width is 40% of the limb circumference at the midpoint of the cuff application and its length is at least 80%, preferably 100% of the limb circumference at the midpoint of cuff application. Use of the wrong size can affect the accuracy of the measurement.

(3) *Technical requirements for the display* :

The display shall be designed and arranged so that the information including measuring values can be read and easily recognized.

Testing shall be carried out by visual inspection.

If abbreviations are used on the display they shall be as follows:—

- "S" or "SYS" : systolic blood pressure (value);
- "D" or "DIA" : diastolic blood pressure (value);
- "M" or "MAP" : mean arterial blood pressure (value).

Single letter abbreviations shall be positioned in such a way to avoid confusion with SI units.

(4) Effect of voltage variations of the power source

(i) Internal electrical power source

(a) Changes of the voltage within the working range determined according to para 4(1) of Annexure A shall not influence the cuff pressure reading and the result of the blood pressure measurement.

(b) Outside this working range no cuff pressure reading and no result of the blood pressure measurement shall be displayed.

Testing shall be carried out in accordance with paragraphs 4(1) and 5(1) of Annexure A.

(ii) External electrical power source

(a) Changes of the voltage within the working range specified by the manufacturer shall not influence the cuff pressure reading and the result of the blood pressure measurement.

(b) Incorrect values resulting from voltage variations outside the limits given in paragraph 6(4)(ii)(a) shall not be displayed.

Testing shall be carried out according to para 4(4) (alternating current) and para 4(5) (direct current) of Annexure A.

Note: In the case of any malfunction of the equipment, deflation to below 2 kPa (15 mmHg) must be guaranteed within 180s in the case of adult patients and to below 0.7 kPa (5 mmHg) within 90s in the case of neonatal/infant patients.

(5) Pneumatic system

(i) *Air leakage:*

Air leakage shall not exceed a pressure drop of 0.8 kPa/min (6 mmHg/min).

Testing shall be carried out in accordance with paragraph 6 of Annexure A.

(ii) *Pressure reducing system for devices using the auscultatory method:*

The pressure reducing system for manually operated and automated deflation valves shall be capable of maintaining a deflation rate of 0.3 kPa/s to 0.4 kPa/s (2 mmHg/s to 3 mmHg/s) within the target range of systolic and diastolic blood pressure. For devices which control the pressure reduction as a function of the pulse rate, a deflation rate of 0.3 kPa/pulse to 0.4 kPa/pulse (2 mmHg/pulse to 3 mmHg/pulse) shall be maintained.

Note: Manually operated deflation valves should be easily adjustable to these values. Testing shall be carried out in accordance with paragraph 7 of Annexure 7.

(iii) *Rapid exhaust:*

During the rapid exhaust of the pneumatic system, with the valve fully opened, the time for the pressure reduction from 35 kPa to 2 kPa (260 mmHg to 15 mmHg) shall not exceed 10 seconds.

For blood pressure measuring systems having the capability to measure in a neonatal/in-fant mode, the time for the pressure reduction from 20 kPa to 0.7 kPa (150 mmHg to 5 mmHg) during the rapid exhaust of the pneumatic system with the valve fully opened shall not exceed 5s.

Testing shall be carried out in accordance with paragraph 8 of Annexure A.

(iv) *Zero setting:*

Blood pressure measuring systems shall be capable of automatic zero setting. The zero setting shall be carried out at appropriate intervals, at least starting after switching on the device. At the moment of the zero setting a gauge pressure of 0 kPa (0 mmHg) shall exist and be displayed thereafter. Devices performing zero setting only immediately after switching on, shall switch off automatically when the drift of the pressure transducer and the analog signal processing exceeds 0.1 kPa (1 mmHg).

Testing shall be carried out in accordance with para 9 and paragraph 10 of Annexure A.

(6) Electromagnetic compatibility

Either:

- electrical and/or electro-magnetic interferences shall not lead to degradations in the cuff pressure indication or in the result of the blood pressure measurement; or
- If electrical and/or electro-magnetic interferences lead to an abnormality, the abnormality shall be clearly indicated and it shall be possible to restore normal operation within 30 s after cessation of the electro-magnetic disturbance.

(7) Stability of the cuff pressure indication

The change in the cuff pressure indication shall not be more than 0.4 kPa (3 mmHg) throughout the pressure range after 10,000 simulated measurement cycles.

Testing shall be carried out in accordance with paragraph 12 of Annexure A.

(8) Pressure indicating device

(i) *Nominal range and measuring range:*

The nominal range for the cuff pressure measurement shall be specified by the manufacturer. The measuring and indication ranges of the cuff pressure shall be equal to the nominal range. Values of blood

pressure measurement results outside the nominal range of cuff pressure shall be clearly indicated as out of range.

Testing shall be carried out by visual inspection.

(ii) *Digital indication* :

The digital scale interval shall be 0.1 kPa (1 mmHg). If the measured value of a parameter is to be indicated on more than one display, all the displays shall indicate the same numerical value. Measured numerical values on the display(s), and the symbols defining the units of measurement shall be arranged in such a way so as to avoid misinterpretation. Numbers and characters should be clearly legible.

Testing shall be carried out by visual inspection.

(9) Signal input and output ports

The construction of the signal input and output ports (excluding internal interfaces, e.g. microphone signal input) relevant to the non-invasive blood pressure measurement shall ensure that incorrectly fitted or defective accessories shall not result in erroneous indication of cuff pressure or erroneous indication of blood pressure.

Testing shall be carried out in accordance with paragraph 13 of Annexure A.

(10) Alarms

If alarms are used they shall be of at least medium priority.

(11) Safety

(i) *Cuff pressure:*

It shall be possible to abort any blood pressure measurement at any time by single key operation and this shall lead to a rapid exhaust.

Testing shall be carried out in accordance with paragraph 14 of Annexure A.

(ii) *Unauthorized access* :

All controls which affect accuracy shall be sealed against unauthorized access.

Testing shall be carried out by visual inspection.

(iii) *Tubing connectors:*

Users of equipment intended for use in environments employing intravascular fluid systems shall take all necessary precautions to avoid connecting the output of the blood pressure measuring device to such systems as air might inadvertently be pumped into a blood vessel if, for example, Luer locks were used.

(iv) *Electrical safety:*

Electronic or automated sphygmomanometers shall comply with the relevant national safety regulations.

(v) *Resistance to vibration and shock:*

After testing, the device shall comply with the requirements of paragraph 5(1).

7. Metrological controls

(1) Model approval

At least three samples of a new type of sphygmomanometer shall be tested.

The tests to verify conformity to metrological and technical requirements shall be carried out according to Annexure A.

(2) Verification

(i) *Initial verification*

At initial verification the requirements of paragraphs 5(1) and 6(5)(i) shall be fulfilled.

Testing shall be carried out according to paragraphs 2 and 6 of Annexure A.

(ii) *Subsequent verification*

Each instrument of an approved type of sphygmomanometer shall be verified every 2 years or after repair. Requirement of paragraphs 5(1) and 6(5)(i) shall be fulfilled and tests must be carried out according to paragraphs 2 and 6 of Annexure A.

(3) Sealing

(i) Control marks will be put on lead seals for which corresponding punched screws shall be attached whenever necessary. These seals shall prevent, without destruction of the control marks:

(a) in the case of patient-monitors in which the sphygmomanometer is one part of a system: the manipulation of the metrologically relevant parts for measuring blood pressure;

(b) in the case of all other manometers: the opening of the casing.

(ii) If the construction of the instrument guarantees security against any interference, the metrological control marks or the security marks may be attached in the form of labels.

(iii) All seals shall be accessible without using a tool.

(4) Marking of the device

The device shall be marked with the following information:—

(i) name and/or trademark of manufacturer;

(ii) serial number and year of fabrication;

(iii) measuring range and measuring unit;

(iv) model approval number;

(v) centre of the bladder, indicating the correct position for the cuff over the artery; and

(vi) marking on the cuff indicating the limb circumference for which it is appropriate.

(5) Manufacturer's information

(i) The manufacturer's instruction manual shall contain the following information:

(a) explanation of the operating procedures which are important for correct application (such as the selection of the appropriate cuff size, positioning of the cuff and adjustment of the pressure reduction rate);

(b) a warning to users of equipment intended for use in environments employing intravascular fluid systems not to connect the output of the blood pressure measuring device to such systems as air might inadvertently be pumped into a blood vessel if, for example, Luer locks were used;

(c) methods for cleaning reusable cuffs;

(d) nature and frequency of the maintenance to ensure that the device operates properly and safely at all times; it is recommended that the performance should be checked at least every 2 years and after maintenance and repair, by re-verifying at least the requirements in paragraphs 5(1) and 6(5)(i) (testing at least at 7 kPa (50 mmHg) and 27 kPa (200 mmHg));

(e) a reference method for clinical tests carried out according to Annexure C or an equivalent method;

(f) a list of all components belonging to the pressure measuring systems, including

(g) a description of the operating principles of the blood pressure measuring device;

(h) remarks on the environment or operational factors which affect the performance (e.g. electro- magnetic fields, arrhythmia);

(i) specification of the single input/ output ports(s);

(j) specification of the rated voltage, if applicable;

(k) specification of the intended power source, if applicable;

(l) nominal range for the result of the blood pressure measurement;

(m) warm up time , if applicable;

(n) description of the meaning of the "out of range signal" and

(o) description of the alarms, if applicable.

ANNEXURE A

TEST PROCEDURES

(Mandatory)

1. *General*

For digital indications an uncertainty of 0.1 kPa (1 mmHg) shall allowed in any displayed value, because the display system cannot indicate a change of less than one unit.

2. Method of test for the maximum permissible errors of the cuff pressure indication

Requirements in paragraph 5(1) shall apply.

(1) Apparatus

(a) rigid metal vessel with a capacity of 500 ml ± 5%;

(b) calibrated reference manometer with an uncertainty less than 0.1 kPa (0.8 mmHg);

(c) pressure generator, e.g. ball pump (hand pump) with a deflation valve;

(d) T-piece connectors and hoses.

(2) *Procedure:*

Replace the cuff with the vessel. Connect the calibrated reference manometer by means of a T-piece connector and hoses to the pneumatic circuit (see Figure 1). After disabling the electro-mechanical

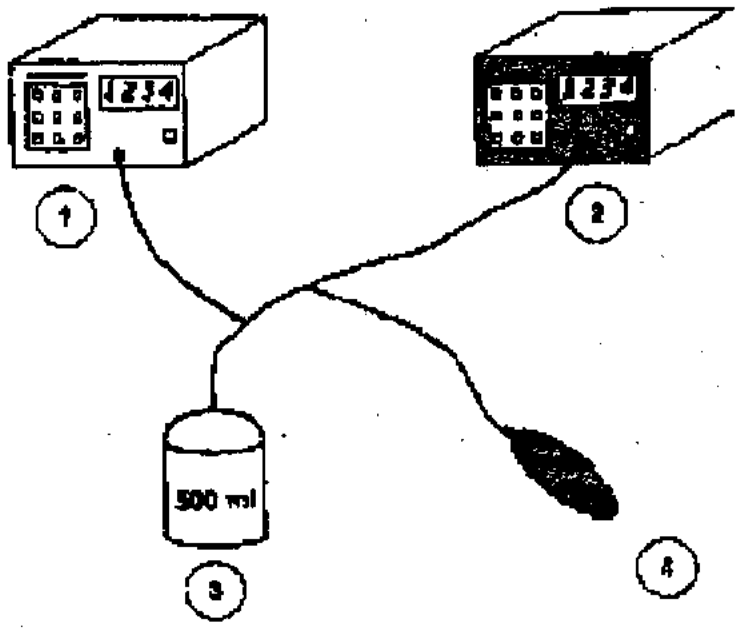

1 - Reference manometer 2 - Device to be tested

3 - Metal vessel 4 - Pressure generator

Figure 1: Measurement system for determining the limits of error of the cuff pressure indication

pump (if fitted), connect the additional pressure generator into the pressure system by means of another T-piece connector. Carry out the test in pressure steps of not more than 7 kPa (50 mmHg) between 0 kPa (0 mmHg) and the maximum pressure of the scale range.

(3) *Expression of results:*

Express the results as the differences between the indicated pressure of the manometer of the device to be tested and the corresponding readings of the reference manometer.

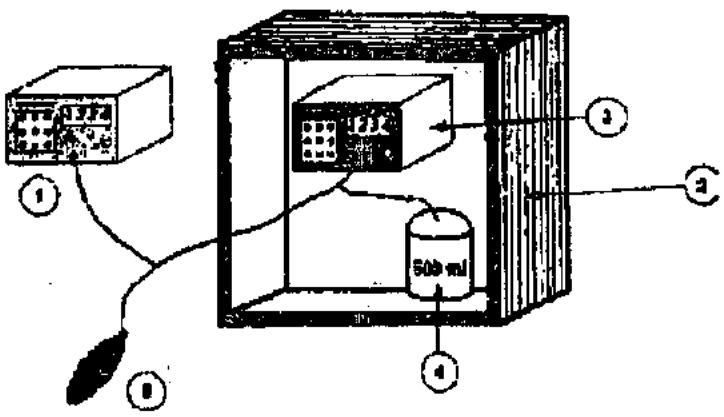

1 - Reference manometer 2 - Climatic chamber

3 - Device to be tested 4 - Metal vessel 5 - Pressure generator

Figure 2: Measurement system for determining the influence of temperature

474 GI/11-152

3. Method of test for the influence of temperature on cuff pressure indication

(1) *Apparatus*

- apparatus as specified in paragraph 2(1) of Annexure A;
- climatic chamber.

(2) Procedure:

Replace the cuff with the vessel. Connect the calibrated reference manometer by means of a T-piece connector to the pneumatic system (see Figure 2). After disabling the electro-mechanical pump (if fitted), connect the additional pressure generator into the pneumatic system by means of another T-piece connector.

For each of the following combinations of temperature and humidity, condition the device for at least 3 h in the climatic chamber to allow the device to reach steady conditions:

(i) 10°C ambient temperature, 85% relative humidity (non-condensing);

(ii) 20°C ambient temperature, 85% relative humidity (non-condensing);

(iii) 40°C ambient temperature, 85% relative humidity (non-condensing).

Carry out the test of the cuff pressure indication as described in paragraph 2(2) of Annexure A for each of the combinations of temperature and humidity mentioned above.

(3) *Expression of results:*

Express the results as the differences between the indicated pressure of the manometer of the device to be tested and the corresponding indications of the reference manometer at the relevant temperature value.

4. Test methods for the effect of voltage variations of the power source on the cuff pressure indication

(1) Internal electrical power source

(i) *Apparatus*

- adjustable direct current voltage supply;
- voltmeter with an uncertainty of less than 0.5% of the measured value;
- calibrated reference manometer with an uncertainty of less than 0.1 kPa (0.8 mmHg).

(ii) *Procedure* :

Replace the internal electrical power source of the blood pressure measuring system with a DC voltage supply having an impedance which is equivalent to the impedance of the internal electrical power source specified by the manufacturer. Measure the variation in applied DC voltage supply with a voltmeter. Test the blood pressure measuring system by altering the DC voltage supply in steps of 0.1 V and determine the lowest voltage limit at which the cuff pressure reading is still displayed.

Carry out the test with the maximum permissible impedance of the internal electrical power source.

Carry out the test according to the procedure specified in paragraph 2 of Annexure A at the lowest voltage limit increased by 0.1 V and also at the nominal voltage.

(iii) *Expression of results:*

Express the results as the difference between the cuff pressure indication of the blood pressure measuring system to be tested and that of the reference manometer at the lowest voltage limit increased by 0.1 V and at nominal voltage.

(2) External electrical power source-alternating current

(i) *Apparatus*

(a) adjustable alternating current voltage supply;

(b) voltmeter with an uncertainty of less than 0.5 % of the measured value;

(c) calibrated reference manometer with an uncertainty of less than 0.1 kPa (0.8 mmHg).

(ii) *Procedure* :

Connect the blood pressure measuring system to the adjustable alternating current voltage supply. Measure the variation in AC voltage supply with the voltmeter.

Carry out the test according to the procedure specified in paragraph 2 of this Annexure.

- the maximum rated voltage, declared by the manufacturer, increased by 10%;
- the mean value of the maximum and minimum rated voltage, declared by the manufacturer;
- the minimum rated voltage, declared by the manufacturer, decreased by 10%.

(iii) *Expression of results:*

Express the results as the difference between the cuff pressure indication of the blood pressure measuring system to be tested and that of the reference manometer.

(3) External electrical power source-direct current

(i) *Apparatus:*

Use the apparatus listed in paragraph 4(1)(i) of this Annexure.

(ii) *Procedure:*

Connect the blood pressure measuring system to the DC voltage supply. Control the DC voltage supply by reference to a voltmeter.

Carry out the test according to the procedure specified in paragraph 2 of Annexure A at—

(a) the maximum rated voltage, declared by the manufacturer, increased by 10%;

(b) the mean value of the maximum and minimum rated voltage, declared by the manufacturer;

(c) the minimum rated voltage, declared by the manufacturer, decreased by 10%.

(iii) *Expression of results* :

Express the results as the difference between the cuff pressure indication of the blood pressure measuring system to be tested and that of the reference manometer.

(4) Voltage variations of the external electrical power source - alternating current

(i) *Apparatus:*

Use the apparatus listed in paragraph 4(2)(i) of this Annexure.

(ii) *Procedure:*

Connect the blood pressure measuring system to the AC voltage supply. Measure the variation in the AC voltage supply with the voltmeter. Test the blood pressure measuring system by altering the DC voltage supply in steps of 5V and determine the lowest voltage limit at which the cuff pressure reading is displayed.

Carry out the test according to the procedure specified in paragraph 2 of this Annexure at the lowest voltage limit increased by 5V and also at the rated voltage.

(iii) *Expression of results:*

Express the results as the difference between the cuff pressure indication of the blood pressure measuring system to be tested and that of the reference manometer at rated voltage and the lowest voltage limit increased by 5V.

(5) Voltage variations of the external electrical power source - direct current

(i) *Apparatus:*

Use the apparatus listed in paragraph 4(1)(i) of this Annexure.

(ii) *Procedure:*

Connect the blood pressure measuring system to the DC voltage supply. Measure the variation in the DC voltage supply with the voltmeter.

Test the blood pressure measuring system by altering the DC voltage supply in steps of 0.1 V and determine the lowest voltage limit at which the cuff pressure reading is displayed.

Carry out the test according to the procedure specified in paragraph 2 of Annexure A at the lowest voltage limit increased by 0.1 V and also at the rated voltage.

(iii) *Expression of results:*

Express the results as the difference between the cuff pressure indication of the blood pressure measuring system to be

tested and that of the reference manometer at rated voltage and at the lowest voltage limit increased by 0.1 V.

5. Test methods for the effect of voltage variations of the power source on the result of the blood pressure measurement

(1) Internal electrical power source

(i) *Apparatus*

- adjustable direct current voltage supply;
- voltmeter with an uncertainty less than 0.5% of the measured value;
- patient simulator [see paragraph 2(15)] for the auscultatory and/or oscillometric method, having additional deviations originating from the simulator of not more than 0.27 kPa (2 mmHg) for the mean value of the measurements and generating signals for blood pressure values of approximately

  — systolic: 16 kPa (120 mmHg);

  — diastolic: 11 kPa (80 mmHg);

  — pulse rate: 70 min-1-80min-1.

(ii) *Procedure:*

Replace the internal electrical power source of the blood pressure measuring system by a DC voltage supply having an impedance which is equivalent to the impedance of the internal electrical power source specified by the manufacturer. Devices intended to be used with consumer batteries shall be tested with an impedance of less than 1½.

Control the DC voltage supply by reference to the voltmeter.

Connect the blood pressure measuring system to the patient simulator. Carry out the test at the maximum permissible impedance of the internal electrical power source.

Carry out 20 simulated blood pressure measurements at the lowest voltage limit as determined in paragraph 4(1)(ii) of Annexure A increased by 0.1 V and at nominal voltage.

(iii) *Expression of results:*

Determine the mean value (systolic and diastolic values separately) of the 20 consecutive readings taken at each voltage level.

(2) External electrical power source - alternating current

(i) *Apparatus:*

- adjustable alternating current voltage supply;
- voltmeter with an uncertainty less than 0.5% of the measured value;
- patient simulator as described in paragraph 5(1)(i) of Annexure A.

(ii) *Procedure:*

Connect the blood pressure measuring system to the AC voltage supply.

Control the AC voltage supply by reference to the voltmeter. Connect the blood pressure measuring to the simulator.

Carry out 20 simulated blood pressure measurements each at:

- the maximum rated voltage, declared by the manufacturer, increased by 10%;
- the mean value of the maximum and minimum rated voltage, declared by the, manufacturer;
- the minimum rated voltage, declared by the manufacturer, decreased by 10%.

(iii) *Expression of results* :

Determine the mean value (systolic and diastolic values separately) of the 20 consecutive readings taken at each voltage level.

(3) External electrical power source - direct current

(i) *Apparatus*

(a) adjustable direct current voltage supply;

(b) voltmeter with an uncertainty less than 0.5 % of the measured value;

(c) patient simulator as described in paragraph 5(1)(i) of Annexure A.

(ii) *Procedure:*

Connect the blood pressure measuring system to the DC voltage supply.

Control the DC voltage supply by reference to the voltmeter. Connect the blood pressure measuring system to the simulator.

Carry out 20 simulated blood pressure measurements each at:

(a) the maximum rated voltage, declared by the manufacturer, increased by 10%;

(b) the mean value of the maximum and minimum rated voltage, declared by the manufacturer;

(c) the minimum rated voltage declared by the manufacturer, decreased by 10%.

(iii) *Expression of results:*

Determine the mean value (systolic and diastolic values separately) of the 20 consecutive readings taken at each voltage level.

6. Method of test for air leakage of the pneumatic system

(1) *Apparatus:*

6(1)(i) rigid metal cylinder of an appropriate size;

6(1)(ii) pressure generator, e.g. ball pump (hand pump) with deflation valve;

6(1)(iii) stopwatch.

(2) *Procedure*

If because of technical reasons, the test as described in this sub-clause cannot be performed, use an alternative test procedure specified by the manufacturer.

Carry out the test at constant temperature in the range 15°C to 25°C.

Before beginning the test, allow the blood pressure measuring system to reach working temperature.

Wrap the cuff around the cylinder (see 6.2) such that, for devices measuring at the upper arm and the thigh, the circumference of the applied cuff does not exceed that of the cylinder by more than 7%.

Note 1 : Electro-mechanical pumps which are a part of the system may be used for the test. Valves which are permanently opened may be disconnected for the test.

Note 2 : For this test no calibrated reference manometer is required because the cuff pressure display of the unit under test can be used when the error of the cuff pressure indication is taken into account. The advantage of this test is that the unit under test is in its original configuration. Additional connections can increase the leakage.

Carry out the test over the whole measuring range at least five equally spaced pressure steps [e.g. 7 kPa(50 mmHg), 13 kPa (100 mmHg), 20 kPa (150 mmHg), 27 kPa (200 mmHg) and 34 kPa (250 mmHg)]. Because the thermodynamic equilibrium is influenced by decreasing or increasing the pressure when changing to the next pressure step, wait at least 60 s before reading the values. Test the air leakage over a period of 5 minutes and determine the measured value from this.

(3) Expression of results:

Express the air leakage as the rate of pressure loss per minute.

7. Method of test for the pressure reduction rate

(1) Apparatus

(i) T-piece connectors;

(ii) calibrated reference manometer with signal output port and an uncertainty less than 0.1 kPa (0.8 mmHg);

(iii) artificial or human limbs;

(iv) recording unit.

(2) Procedure

Measure the pressure reduction rate either on human subjects or artificial limbs.

Note 1 : The intention is to use artificial limbs, but as these are still under consideration, measurements performed with human volunteers are acceptable.

Note 2 : Two limb sizes should be used, being equal to the upper and lower limits of limb

circumferences with which a particular size of cuff is recommended for use.

Note 3 : It is intended that the characteristics of the artificial limbs reflect some elastic characteristics of human limbs.

Because the cuff deflation rate may be influenced by the way that a cuff is applied, apply and remove the cuff for each of at least ten repeated measurements on at least two different limb sizes. The deflation may be reset.

Connect the calibrated reference manometer to the cuff by means of a T-piece. Connect the output part of the calibrated reference manometer to the recording unit.

(3) Expression of results

Determine the rate of pressure reduction (e.g. by graphical evaluation and drawing tangents) at the pressure values 8 kPa (60 mmHg), 16 kPa (120 mmHg) and 24 kPa (180 mmHg). Calculate the pressure reduction rate as the mean value calculated separately for the pressure values 8 kPa (60 mmHg), 16 kPa (120 mmHg) and 24 kPa (180 mmHg) and for the various limb circumferences.

If the pressure reduction rates are dependent on the pulse, record the pulse rate. In this case, express the result as pressure reduction rate per pulse.

8. Method of test for the rapid exhaust valve

(1) *Apparatus*

- two rigid vessels with capacities of 100 ml ± 5% and 500 ml ± 5%, respectively;
- calibrated reference manometer with an uncertainty less than 0.1 kPa (0.8 mmHg);
- T-piece connector;
- stopwatch.

(2) *Procedure*

Carry out the test with the 500 ml vessel in place of the cuff. For blood pressure measuring systems having the capability of measuring in a neonatal/infant mode and for devices measuring at the wrist, carry out the test with the 100 ml vessel in place of the cuff.

Connect the calibrated reference manometer by means of a T-piece to the pneumatic system.

Inflate at least to the maximum pressure given in paragraph 6(5)(iii), wait 60 seconds and activate the rapid exhaust valve.

Measure the time between the pressure values specified in paragraph 6(5)(iii) using the stopwatch.

(3) Expression of results

Express the results as the measured exhaust times.

9. Test method for the zero setting

(1) Apparatus

(i) rigid vessel with a capacity of 500 ml ± 5%;

(ii) calibrated reference manometer with an uncertainty less than 0.1 kPa (0.8 mmHg);

(iii) electro-mechanical pressure/suction pump;

(iv) pressure generator, e.g. ball pump (hand pump) with deflation valve;

(v) T-piece connectors;

(vi) hoses.

(2) Procedure and evaluation

If, because of technical reasons, the test as described in this sub-clause cannot be performed, use an alternative test procedure specified by the manufacturer.

To test the function of the zero setting, apply a pressure of + 0.8 kPa (+ 6 mmHg) and subsequently - 0.8 kPa (- 6 mmHg) to the pneumatic system and initiate a zero setting of the device. Ensure that all displayed pressure values have a systematic error of - 0.8 kPa (- 6 mmHg) and + 0.8 kPa (+ 6 mmHg), respectively.

Before beginning the test, allow the blood pressure measuring system to reach working temperature .

Set up the blood pressure measuring system to be tested as follows:—

- replace the cuff with the 500 ml vessel;
- insert the calibrated reference manometer into the pneumatic system by means of a T-piece connector;
- insert the pressure/suction pump into the pneumatic system by means of a T-piece connector;
- insert the pressure generator into the pneumatic system by means of a T-piece connector.

Note: If convenient, one adjustable pump may be used in place of the pressure/suction pump and pressure generator to generate the pressures.

Proceed in the following way:—

(a) Initiate a zero setting as described by the manufacturer. Set the blood pressure measuring system to the service mode, if available. Raise the pressure to 13 kPa (100 mmHg) immediately afterwards and record the displayed value.

(b) Generate a constant gauge pressure of + 0.8 kPa (+ 6 mmHg) in the pneumatic system by using the pressure/suction pump at the moment of zero setting. During this period close the deflation valve of the device under test or close the hose to it, e.g. by pinching the hose tightly. Set the blood pressure measuring system to the service mode, if available. Raise the pressure to 13 kPa (100 mmHg) immediately afterwards. The zero setting is operating correctly if the displayed value decreases by 0.8 kPa (6 mmHg) compared to the value taken in (a).

(c) Repeat (b) with a constant gauge pressure of - 0.8 kPa (- 6 mmHg) in the pneumatic system. Set the blood pressure measuring system to the service mode, if available. Raise the pressure to 13 kPa (100 mmHg) immediately afterwards. The zero setting is operating correctly if the displayed value increases by 0.8 kPa (6 mmHg) compared to the value taken in (a).

10. Test method for the drift of the cuff pressure indication

(1) *General*

This test applies for devices performing zero setting only immediately after switching on.

(2) Apparatus

- rigid vessel with a capacity of 500 ml ± 5%;
- calibrated reference manometer with an uncertainty less than 0.1 kPa (0.8 mmHg);
- stopwatch;
- T-piece connectors;
- patient simulator as described in paragraph 5(1)(i) of this Annexure.

(3) *Procedure and evaluation*

Replace the cuff with the 500 ml vessel. Insert the calibrated reference manometer and the patient simulator into the pneumatic circuit by means of T-piece connectors.

Before beginning the test, allow the blood pressure measuring system to reach operating temperature as described in the instructions for use.

Test the stability of the cuff pressure indication after the zero setting at a pressure value of 7 kPa (50 mmHg) according to the procedure specified in paragraph 2 of this Annexure.

Under the same environmental conditions determine the time (t_1) until the change of the cuff pressure indication exceeds 0.1 kPa (1 mmHg). Switch off the device and switch on afterwards. Perform one blood pressure measurement and wait until the device has switched off automatically. Determine the time (t_2) between switching on and automatically switching off. The time (t_2) shall be less than or equal to the time (t_1).

11. Test method for the stability of the blood pressure determination (influence of temperature and humidity)

(1) *Apparatus*

(i) patient simulator as described in paragraph 5(1)(i) of this Annexure.

(ii) climatic chamber, capable of adjustment to an accuracy of 1°C for the temperature and 5% for the relative humidity.

(2) *Procedure*

Carry out the testing of the signal processing by means of the patient simulator. For each of the

following combinations of temperature and humidity, place the blood pressure measuring system for at least 3 h in the climatic chamber to allow the system to reach steady conditions:

(i) 10°C ambient temperature, 85% relative humidity (non-condensing);

(ii) 20°C ambient temperature, 85% relative humidity (non-condensing);

(iii) 40°C ambient temperature, 85% relative humidity (non-condensing).

For each combination of temperature and humidity, take 20 consecutive readings of the blood pressure measuring system under test.

Place the blood pressure measuring system in the climatic chamber for at least 3 hours. At each combination of temperature and humidity switch on the blood pressure measuring system before starting the test. Wait until the warm up time (described in the instructions for use) has elapsed, carry out the measurement (20 consecutive readings) and switch off the blood pressure measuring system afterwards.

(3) *Expression of results*

Determine the mean value (systolic and diastolic values separately) of the 20 consecutive readings taken at each combination of temperature and humidity.

Note: Because the testing of the influence of temperature and humidity for the signal processing cannot be separated from the temperature/humidity effect on the pressure transducer and the deviations originating from the simulator, both contributions should be taken into account for the evaluation of the test.

12. Test methods for the stability of cuff pressure indication following prolonged usage

(1) *Procedure*

Carry out the test according to the procedure specified in paragraph 2 of this Annexure prior to prolonged usage.

Perform 10,000 simulated measurement cycles with the complete blood pressure measure-ment system at which at least the following cuff pressure values shall be reached:

- adult mode: 20 kPa (150 mmHg);
- neonatal/infant mode: 10 kPa (75 mmHg).

Note 1: For devices which measure with the auscultatory and oscillometric method this test should be carried out for both modes.

Note 2 : For devices which measure in both modes (adult and neonatal/infant) the test should be carried out in both modes.

(2) *Expression of results*

Express the result as the difference between the cuff pressure indication before and after 10,000 simulated blood pressure measurement cycles at the same test pressure and under the same environmental conditions.

13. Test methods for the effect of external voltages and abnormal connections to the signal input/output ports

(1) *Apparatus*

- rigid vessel with a capacity of 500 ml ± 5%;
- calibrated reference manometer with an uncertainty less than 0.1 kPa (0.8 mmHg);
- T-piece connectors;
- pressure generator, e.g. ball pump (hand pump) with deflation valve.

(2) *Procedure*

Replace the cuff with the 500 ml vessel, insert the calibrated reference manometer into the pneumatic system by means of a T-piece and proceed as follows:—

(i) Raise the pressure to 13 kPa (100 mmHg) and record the displayed value.

(ii) Repeat (i) whilst short circuiting all contacts of the signal input/output ports belonging to the non-invasive blood pressure measuring system.

(iii) Repeat (i) whilst applying the maximum voltage specified by the manufacturer to each contact belonging to the non-invasive blood pressure measuring system.

(3) Evaluation

Compare the indicated value under (i) with the indicated values under (ii) and (iii).

14. Test method for the cuff pressure deflation following an aborted measurement

(1) *Apparatus*

(i) calibrated reference manometer with an uncertainty less than 0.1 kPa (0.8 mmHg);

(ii) T-piece connectors.

(2) *Procedure and evaluation*

Insert the calibrated reference manometer into the pneumatic system by means of a T-piece.

Start a blood pressure measurement. Abort the measurement during inflation. Start an-other measurement and abort it during the pressure reduction. If interval measurements are possible repeat the test in this mode.

Check by visual inspection whether the rapid exhaust is activated.

PART VIII
TAXIMETERS

1. Terminology

(a) *'Taximeter'—A* measuring instrument which totalizes continuously and indicates at any moment of the journey the charges payable by the passenger of a public vehicle as function of the distance travelled and, below a certain speed, of the length of time occupied, independent of supplementary charges, according to the authorised tariffs.

(b) *Basic distance tariff*—The tariff for distance corresponding to all the intervals except the initial interval.

(c) *Basic time tariff*—The tariff for time corresponding to all the intervals except the initial interval.

(d) *Cleared*—A taximeter is cleared when no indication of fare is shown and when all parts are in the positions in which they are designed to be, when the vehicle on which the taximeter is installed is not engaged by a passenger.

(e) *Reading face*—The side of a taximeter upon which the indications of interest to the passenger are indicated.

(f) *Fare*—That portion of the charge for the hire of a vehicle that is automatically calculated by a taximeter through the operation of the distance or time mechanism.

(g) *Flag*—A device by which the operating conditions of a taximeter is controlled.

(h) *Initial distance or time interval*—The interval corresponding to the initial money drop.

(i) *Money drop*—An increment of fare indication.

(j) *Initial money drop*—The initial charges appearing on the reading face of the taximeter at the time when it is hired by passenger.

(k) *Distance of time intervals*—The intervals corresponding to money drops following the initial money drop.

(l) *Constant 'k' of the taximeter*—The constant 'k' of a taximeter is a characteristic quantity showing the type and number of signals which the instrument must receive in order to indicate correctly a covered distance of 1 km.

This constant 'k' is expressed—

(i) in 'revolutions per indicated kilometre' (rev/km) if the information relating to the distance covered by the vehicle is introduced into the taximeter in the form of a number of revolutions of its main shaft (drive shaft at entry point to the instrument).

(ii) in 'impulse per indicated kilometre' (imp/km) if this information is introduced in the form of electrical signals.

According to the construction of the instrument the constant 'k' may be fixed or may be adjustable by fixed amounts.

(m) *Characteristic coefficient 'w' of the vehicle*—The characteristic coefficient 'w' of a vehicle is a quantity indicating the type and number of signals intended to drive the taximeter which appear at the component provided for this purpose, for a distance travelled of 1 km.

This coefficient 'w' is expressed—

(i) in 'revolutions per kilometre travelled' (rev/km.); or

(ii) in 'impulse per kilometre travelled' (imp/km),

depending on whether the information relating to the distance travelled by the vehicle appears in the form of a number of revolutions of the component driving the taximeter or in the form of electrical signals.

This coefficient varies as a function of several factors, principally the wear and pressure of the tyres, the load carried by the vehicle, the conditions under which the vehicle makes a journey. It shall be measured under the standard test conditions for the vehicle.

(n) *Adapting device*—A special device which allows the values of 'k' and 'w' to be adjusted in such a way that maximum permissible error laid down in paragraph 5(c) shall not be exceeded.

2. General

(a) The following units of measurements shall be used for taximeters:—

(i) the metre or kilometre, for distance

(ii) the second, minute or hour for time.

(b) The fare for the journey shall be expressed in the legal monetary units.

3. Technical characteristics

(A) *General constructional features*

(a) The taximeter shall be robust and well-constructed. The functional parts of the taximeter shall be made of materials which guarantee adequate strength and stability.

(b) The casing of the taximeter and that of the adapting device as well as the covers of the transmission devices shall be so made that the essential parts of the mechanism are out of reach from outside and are protected against dust and humidity.

Access to devices for adjustment shall be made impossible without damage to the sealing arrangements.

(c) In the case of electronic taximeters, the electronic devices which calculate the charge payable shall operate without failure, and at any time it shall be possible to check their correct operation.

This may be achieved by means of a special control programme which is automatic or manually activated.

Any fault identified by this control programme shall be clearly indicated.

(B) *Measuring device—Calculating device*

(a) Except when the taximeter is being cleared, indications of fare shall be clearly visible at all times.

(b) The taximeter shall be so designed that it calculates and indicates the fare for the journey solely on the basis of:

(i) the distance travelled when the vehicle moves at a speed higher than the changeover speed; or

(ii) the period of time when the vehicle moves at a speed less than the changeover speed.

The changeover speed is attained by dividing the time tariff by the distance tariff and may vary according to the variation in these tariffs.

(c) The distance drive shall be made through the medium of the wheels, and the reverse motion shall not cause a reduction in the fare or distance shown.

(d) The time drive shall be obtained by a mechanical or electronic movement of the clock work, which can be activated only by operating the mechanism of the taximeter.

(e) If the working of the clockwork mechanism is operated by manual winding, it shall work for at least 8 hours without rewinding or for at least two hours if rewinding is necessary at each manual operation before it is set in operation.

The electronic clockwork, shall be capable of functioning at any time.

(f) During the distance drive, the first increment of fare indication (money drop) shall occur after travelling the initial distance. The subsequent money drops shall correspond to equal distance between each of them.

(g) During the time drive, the first increment of fare indication (money drop) shall occur after the initial time interval. The subsequent money drops shall correspond to equal time intervals between each of them.

(h) Without change of drive, the ratio between the initial distance and the subsequent distances shall be the same as the ratio between the initial time and subsequent time intervals.

(i) An adapting device, situated inside or outside the instrument case, shall allow the adaptation of the taximeter constant to the characteristic coefficient of the vehicle on which it is mounted, with an accuracy such that the maximum permissible errors laid down in paragraph 5(c) shall not be exceeded.

(j) The taximeter shall be so designed as to facilitate necessary adjustment of the calculating device for making it conform to the changes in the tariff.

(k) If the number of tariffs provided on the instrument is greater than the number of tariffs in force, the taximeter shall, in the superfluous positions, calculate and indicate a fare based on one of the authorised tariffs.

(C) *Control mechanism*

(a) The mechanism of the taximeter shall be capable of being set in motion after having been engaged by a single control mechanism.

For the electronic taximeter this mechanism may consist of various push buttons and switches for special operations.

The mechanism of the taximeter shall be capable of being set in motion in one of the positions indicated in clauses (b), (c) and (d).

(b) FREE position (for hire)

In this position—

(i) there shall be no indication of the fare to be paid or, this indication shall be equal to zero or to a value of the initial money drop but in the latter case, the indication shall be covered by a shutter;

(ii) the distance drive and the time drive shall not operate the device which indicates the fare to be paid;

(iii) the totalizer indicating the total distance travelled shall remain turned off;

(iv) the window through which possible extras are seen shall be blank or indicate "Zero".

(c) "WORKING" position (hired)—In this position, the time and distance drives and the extras indicator, if any, shall be engaged.

(d) "TO PAY" position—In this position, which shows the final total fare due from the passenger for the journey excluding any extras, the time drive shall be disconnected and the distance drive shall remain connected to the authorised tariff.

In case of electronic taximeters it is permitted, by operating a special button in the TO PAY position, to add any possible extras to the fare, and to indicate on the indicator, the total fare payable by the passenger. When this button is released the two amounts shall be indicated separately.

(e) The control mechanism, shall be so designed that starting from FREE position, the taximeter can be set successively in WORKING position and TO PAY position.

(f) The operation of the control mechanism is subject to the following restrictions:—

(i) Starting from the WORKING position, it shall not be possible to put the taximeter back in the "FREE" position without going through the "TO PAY" position.

(ii) Starting from the TO PAY position, it shall not be possible to put the taximeter in the WORKING position without going through the FREE position.

(D) *Indicating device*

(a) The "reading face" of the taximeter shall be so designed that the indications of interest to the passenger can be easily read by him.

(b) The fare to be paid, excluding possible extras, shall be ascertained from the fare indicator by simple reading of an indication in aligned figures having a minimum height of 10 mm.

When electronic indicating elements are used it shall be possible to check the operation of the indication.

(c) As soon as the instrument is put into operation from the FREE position by operating the control mechanism, the shutter, if any, covering the indication of fare to be paid, shall retract and a fixed amount corresponding to the initial money drop shall appear.

The fare indicator shall thereafter advance by successive steps of a constant monetary value, as soon as the amount of the initial money drop has been used up.

(d) The taximeter shall be provided with a device indicating at any moment on the reading face the engaged working position.

(e) The taximeter shall have a means for illuminating the readings appearing on the reading face and it shall be possible to replace the light bulbs without opening the sealed parts of the meter.

In the case of self-luminous indications no additional illumination is required if readability of the indications of interest to the passenger is ensured.

(E) *Optional additional devices*

The taximeter may in addition be provided with supplementary devices, such as—

(a) an indicator of extras independent of the fare indicator mentioned in clause 3(D)(b) and automatically returning to zero in the FREE position. In the TO PAY position it is permitted to add the extras to the fare by operating a push button;

(b) totalizers which give, in aligned figures having a minimum height of 4 mm, indications of—

(i) the total distance travelled by the vehicle;

(ii) the total distance travelled on hire;

(iii) the total number of "engagement";

(iv) the total number of money drop.

The totalizers may be also non-erasable electronic memories which can be recalled and indicated in the FREE position of the taximeter. The data in the memory shall be protected for at least 72 hours after a power supply failure;

(c) a device detecting the presence of a passenger (pressure sensor).

4. Inscription

(a) Every taximeter shall bear the following indications:—

(i) name and address of the manufacturer or his trade mark.

(ii) the constant 'k' in rev/km. or imp/km.

(b) Every taximeter shall have places to permit :

Affixation of marks of initial and periodical verifications.

(c) In the vicinity of the windows of all indicating devices the meanings of the values shown shall be given clearly, legibly and unambiguously.

(d) The name or the symbol of the monetary unit shall be alongside the fare indication for the journey and the indication of extras to be paid.

5. Maximum permissible errors

(a) During drive by distance the maximum dispersion of the indications shall not exceed :

(i) for the initial distance, 2 per cent of the true value. However, for initial distances less than 1000 metres, the dispersion may be up to 20 metres;

(ii) for distances succeeding the initial distance 2 per cent of the true value.

(b) During drive by time the maximum dispersion of the indications shall not exceed—

(i) for the initial time : 3 per cent of the true value however, for initial times less than 10 minutes, this error may be up to 20 seconds,

(ii) for times succeeding the initial time: 3 per cent of the true value.

(c) The adaption shall be carried out under the standard test conditions such that the constant 'K' of the taximeter differs by less than 1 per cent from the characteristic number 'W' of the vehicle on which it is mounted.

6. Protection and guarantee seals

(a) The under mentioned part of the taximeter shall be so constructed that they can be sealed with lead or by marks of protection and guarantee:

(i) the case enclosing the internal mechanism of the taximeter;

(ii) the case of adjusting device (if this device is outside the case of the taximeter);

(iii) the covers of electrical or mechanical devices forming the connection between the entrance of the taximeter and the corresponding part provided on the vehicle for alignment with the instrument, including the detachable parts of the adjusting device.

(b) A plate of approved size and pattern shall be attached to the taximeter gear box or to the taximeter itself in such a manner that it cannot be removed without either removing the seals affixed by the testing authority or opening the taximeter or taximeter gear box. The plate shall show in raised or sunken words and figures, the type of cab on which the taximeter is to be used.

These seals shall be such that all access to protected components particularly the components of adjustment is impossible without damaging the seal.

7. Standard test conditions for the vehicle

(a) The load carried by the vehicle corresponds to the weight of four adult persons including the driver.

(b) The tyres are inflated to the pressure prescribed by the vehicle manufacturer and are in good condition (e.g., conforming to the road safety rules).

(c) The vehicle is moving, under its own power, on level ground in a straight line, at a speed less than 40 km/h.

8. Test methods

To determine compliance with distance tolerances a distance test of the taximeter shall be conducted utilizing anyone of the following test methods:—

(a) *Road test method*—A road test consists of driving the vehicles over a precisely measured road course.

(b) *Fifth wheel test method*—This test consists of driving the vehicle over any reasonable road course and determining the distance actually travelled through the use of a mechanism known as "fifth wheel" that is attached to the vehicle and that independently measures and indicates the distance.

(c) *Simulated road test method*—This test consists of determining the distance travelled by computation from rolling circumference and wheel turn data.

9. Test procedure

(a) The distance test of a taximeter, whether (a), (b) or (c) shall include at least duplicate runs of sufficient length to cover at least the third money drop or one km., whichever is greater, and shall be at a speed approximating the average speed travelled by the vehicle in normal service.

(b) If the taximeter is equipped with a mechanism through which charges are made for time intervals, a test shall be conducted to determine whether there is interference between the time and distance mechanism. During this test, the vehicle is operated at a speed of 3 or 4 km./h faster than changeover speed.

PART IX

COMPRESSED GASEOUS FUEL (CNG) MEASURING SYSTEMS FOR VEHICLES

HEADING—A

1. Scope

(1) These specifications lay down the metrological and technical requirements applicable to compressed gaseous fuel measuring systems for vehicles. It also specifies the requirements for the approval of constituents elements of the measuring systems (meter, etc.). Measuring systems for liquid petroleum gas are not in the scope of this specification as the fluid is at liquid state.

(2) In general, the measuring systems that are covered by this specification are intended for the refuelling of roadside motor vehicles, small boats, aircraft and for trains.

In principle, these specifications apply to all measuring systems fitted with a meter as defined in paragraph 1, sub-paragraph (1) (continuous measurement), whatever be the measuring principle of the meters or their application.

TERMINOLOGY

1. Measuring system and its constituents

(1) Meter

An instrument intended to measure continuously, memorizes and display the quantity of gas passing through the measurement transducer at metering conditions.

Note: A meter includes at least a transducer, a calculator (including adjustment or correction devices, if present) and an indicating device.

(2) Measurement transducer

A part of the meter which transforms the flow of the gas to be measured into signals which are passed to the calculator. It may be autonomous or use an external power source.

Note: For the purposes of these specifications, the measurement transducer includes the flow or quantity sensor.

(3) Calculator

A part of the meter that receives the output signals from the transducer(s) and, possibly, from associated measuring instruments, transforms them and, if appropriate, stores in memory the results until they are used. In addition, the calculator may be capable of communicating both ways with peripheral equipment.

(4) Indicating device

A part of the meter, which displays continuously the measurement results.

Note: A printing device which provides an indication at the end of the measurement is not an indicating device.

(5) Ancillary device

A device intended to perform a particular function, directly involved in elaborating, transmitting or displaying measurement results.

Main ancillary devices are:—

(a) zero setting devices,

(b) repeating indicating device,

(c) printing device,

(d) memory device,

(e) price indicating device,

(f) totalizing indicating device, pre-setting device, and

(g) self-service device.

(6) Additional device

A part or a device, other than an ancillary device, required to ensure correct measurement or intended to facilitate the measuring operations, or which could in any way affect the measurement.

Main additional devices are:—

(a) filter,

(b) device used for the transfer point,

(c) anti-swirl device,

(d) branches or bypasses,

(e) valves, and

(f) hoses.

(7) Measuring system

A system which comprises the meter itself and all the ancillary devices and additional devices.

(8) Compressed gaseous fuel measuring systems for vehicles

A measuring system intended for the refuelling of motor vehicles with compressed gaseous fuel.

(9) Pre-setting device

A device which permits the selection of the quantity to be measured and which automatically stops the flow of the gas at the end of the measurement of the selected quantity.

Note: The pre-set quantity may be the mass or the related price to pay.

(10) Adjustment device

A device incorporated in the meter, that only allows shifting of the error curve generally parallel to itself, with a view to bringing errors within the maximum permissible errors.

(11) Associated measuring instruments

Instruments connected to the calculator or the correction device, for measuring certain quantities which are characteristics of the gas, with a view to making corrections.

(12) Correction device

A device connected to or incorporated in the meter for automatically correcting the mass, by taking into account the flow rate or the characteristics of the gas to be measured (viscosity, temperature, pressure) and the pre-established calibration curves or both.

(13) Transfer point

A point at which the gas is defined as being delivered.

2. Self service measuring systems

(1) Self-service arrangement

An arrangement that allows the customer to use a measuring system for the purpose of obtaining gas for his own purchase.

(2) Self-service device

A specific device that is part of a self-service arrangement and which allows one or more measuring systems to perform in this self-service arrangement.

Note: The self-service device includes all the elements and constituents that are mandatory so that a measuring system performs in a self-service arrangement.

The arrangement is made of a self-service device and connected measuring systems.

(3) Attended service mode

An operating mode of a self-service arrangement in which the supplier is present and controls the authorization for the delivery.

(4) Unattended service mode

An operating mode of a self-service arrangement in which the self-service arrangement controls the authorization for a delivery, based on an action of the customer.

Note: In unattended service mode, the end of the measurement operation is the end of the registration (printing and/or memorizing) of information concerning the measurement operation.

(5) Pre-payment

A type of payment in attended or unattended service mode requiring payment for a quantity of gas before the delivery commences.

(6) Attended post-payment (or post-payment)

A type of payment in attended service mode requiring payment for the delivery but before the customer leaves the site of the delivery.

(7) Unattended post-payment (or delayed payment)

A type of payment in unattended service mode in which payment for the delivered quantity is required after the delivery, but in which the transaction is not settled when the customer leaves the site, following an implicit agreement with the supplier.

(8) Authorization of a measuring system

An operation that brings the measuring system into a condition suitable for the commencement of the delivery.

3. Metrological characteristics

(1) Primary indication

An indication (displayed, printed or memorized) which is subject to legal metrology control.

Note: Indications other than primary indications are commonly referred to as secondary indications.

(2) Absolute error of measurement

The result of a measurement minus the (conventional) true value of the measurand.

(3) Relative error

The absolute error of measurement divided by the (conventional) true value of the measurand.

(4) Maximum permissible errors

The extreme values permitted by the specification for an error.

(5) Minimum measured quantity of a measuring system

The smallest mass of gas for which the measurement is metrologically acceptable for that system.

Note: In measuring systems intended to deliver, this smallest mass is also referred to as the *minimum delivery.*

(6) Minimum specified mass deviation

The absolute value of the maximum permissible error for the minimum measured quantity of a measuring system.

(7) Minimum specified price deviation

The price to pay corresponding to the minimum specified mass deviation.

(8) Repeatability error

For the purposes of this specification, the difference between the largest and the smallest results of successive measurements of the same quantity carried out under the same conditions.

(9) Intrinsic error

The error of a measuring system determined under reference conditions.

(10) Initial intrinsic error

The intrinsic error of a measuring system as determined prior to all performance tests.

(11) Fault

The difference between the error of indication and the (initial) intrinsic error of a measuring system.

(12) Significant fault

For the mass, a fault means magnitude of which is greater than the larger of these two values :—

(ii) one-tenth of the magnitude of the maximum permissible error for the measuring system and for the measured mass,

(iii) the minimum specified mass deviation.

For the *price to pay,* the price corresponding to the significant fault for the mass.

Note: No fault is allowed for the unit price.

The following are not considered to be significant faults :—

(v) faults arising from simultaneous and mutually independent causes in the measuring instrument itself or in its checking facilities;

(vi) transitory faults being momentary variations in the indication, which cannot be interpreted, memorized or transmitted as a measurement result.

(13) Durability

The capability of the measuring system to keep its performance characteristics over a period of use, for electronic purposes.

4. Tests and test conditions

(1) Influence quantity

A quantity which is not the subject of the measurement but which influences the value of the measurand or the indication of the measuring system.

(2) Influence factor

An influence quantity having a value within the rated operating conditions of the measuring system, as specified in these specifications.

(3) Disturbance

An influence quantity having a value outside the specified rated operating conditions of the measuring system.

Note : An influence quantity is a disturbance if for that influence quantity the rated operating conditions are not specified.

(4) Rated operating conditions

Conditions of use, giving the range of values of influence quantities for which the metrological characteristics are intended to be within the maximum permissible errors.

(5) Reference conditions

A set of specified values of influence factors fixed to ensure valid inter comparison of results of measurements.

(6) Performance test

A test intended to verify whether the measuring system under test (EUT) is capable of accomplishing its intended functions.

(7) Endurance test

A test intended to verify whether the meter or the measuring system is able to maintain its performance characteristics over a period of use.

(8) Bank

A test reservoir or a set of test reservoirs manifolded together which forms part of a multi-segment gas storage system. The segments operate at different pressure levels from one another in refuelling systems fitted with or using a sequential control device.

Note: Testing by using banks generate transient flow rates.

(9) Sequential control device

A device which allows switching from a bank to another one. This device may be included in a measuring system or may be part of the refuelling station.

5. Electronic or electrical equipment

(1) Electronic device

A device employing electronic sub-assemblies and performing a specific function.

Note: Electronic devices, as defined above, may be complete measuring systems or part of measuring systems.

(2) Electronic sub-assembly

A part of an electronic device, employing electronic components and having a recognizable function of its own.

(3) Electronic component

The smallest physical entity which uses electron or hole conduction in semi-conductors, gases, or in a vacuum.

(4) Checking facility

A facility which is incorporated in a measuring system and which enables significant faults to be detected and acted upon.

Note: The checking of a transmission device aims at verifying that all the information which is transmitted is fully received by the receiving equipment.

(5) Automatic checking facility

A checking facility operating without the intervention of an operator.

(6) Permanent automatic checking facility (type P)

An automatic checking facility operating during the entire measurement operation.

(7) Intermittent automatic checking facility (tupe I)

An automatic checking facility operating at least once, either at the beginning or at the end of each measurement operation.

(8) Power supply device

A device which provides the electronic devices with the required electrical energy, using one or several sources of a.c. or d.c.

HEADING—B

1. General requirements

(1) Constituents of a measuring system

A meter itself is not a measuring system. A measuring system includes at least—

(a) a meter,

(b) a transfer point,

(c) a gas circuit with particular characteristics which must be taken into account.

The measuring system may be provided with other ancillary and additional devices [paragraph 2 sub-paragraph (2)].

If several meters intended for separate measuring operations have common elements calculator filter, etc.) each meter is considered to form, with the common elements, a measuring system.

A measuring system shall include only one meter.

(2) Ancillary and additional devices

(I) Ancillary devices may be a part of the calculator or of the meter, or may be peripheral equipment, connected through an interface to the calculator. These devices shall bear a legend which is clearly visible to the user to indicate that they are not controlled when they display a measurement result visible to the user. Such a legend shall be present on each print-out likely to be made available to the customer.

(II) By definition, additional devices likely to be installed in a measuring system shall not corrupt the metrological behaviour of the measuring apparatus.

(3) Field of operation

(I) The field of operation of a measuring system is determined by the following characteristics:—

— minimum measured quantity,

— measuring range limited by the minimum flow rate, Q_{min} and the maximum flow rate, Q_{max},

— maximum pressure of the gas, P_{max},

— minimum pressure of the gas, P_{min},

— if appropriate, nature and characteristics of the gases to be measured,

— maximum temperature of the gas, T_{max},

— minimum temperature of the gas, T_{min},

— environment class

The environmental class may be different according to devices of the measuring system, provided each device is used according to its own environmental class. In particular this is applicable to some parts of a self-service device which can be used at different temperatures than the rest of the measuring system.

(ii) The minimum measured quantity of a measuring system shall have the form 1×10^n, 2×10^n or 5×10^n authorised units of mass, where n is a positive or negative whole number, or zero.

The minimum measured quantity shall satisfy the conditions of use of the measuring system. Except in exceptional cases, the measuring system shall not be used for measuring quantities, less than this minimum measured quantity.

Measuring systems having a maximum flow rate not greater than 30 kg/min shall have a minimum measured quantity not exceeding 2 kg.

Measuring systems having a maximum flow rate larger than or equal to 30 kg/min but not greater than 100 kg/min shall have a minimum measured quantity not exceeding 5 kg.

(iii) The measuring range shall satisfy the conditions of use of the measuring system; the latter shall be designed so that the flow rate is between the minimum flow rate and the maximum flow rate, except at the beginning and at the end of the measurement or during interruptions.

In normal conditions of use, the measuring system shall not be capable of delivering quantities at flow rates smaller than the minimum flow rate. The measuring range of a measuring system shall be within the measuring range of each of its elements.

The ratio between the maximum flow rate and the minimum flow rate shall be at least fifteen.

(iv) A measuring system shall exclusively be used for measuring gas having characteristics within its field of operation, as specified in the model approval certificate. The field of operation of a measuring system shall be within the fields of measurement of each of its constituent elements, in particular the meter.

(4) Indications

(i) Measuring systems shall be provided with an indicating device giving the mass of gas measured. If the system is fitted with a price indicating device, then—

1(4)(i)(a) indications of unit price and price to be paid are related only to mass.

1(4)(i)(b) these indications are displayed only when displaying the mass.

(ii) Mass shall only be indicated in kilogram. The symbol or the name of the unit shall appear in the immediate vicinity of the indication.

(iii) A measuring system may have several devices indicating the same quantity. Each shall meet the requirements of this specification if subject to control. The scale intervals of the various indications shall be the same.

(iv) For any measured quantity relating to the same measurement, the indications provided by various devices shall not deviate one from another.

(v) The use of the same indicating device for the indications of several measuring systems (which then have a common indicating device) is authorized provided that it is impossible to use any two of these measuring systems simultaneously, and that the measuring system providing the indication is clearly identified.

(vi) The scale interval shall be in the form 1×10^n, 2×10^n or 5×10^n authorized units of mass, where n is a positive or negative whole number, or zero.

The scale interval shall be equal to or smaller than half the minimum specified mass deviation.

However non-significant scale intervals should be avoided. Thus does not apply to price indications.

(vii) When relevant, the provisions relating to mass indications apply also to price indications by analogy, and to secondary indications of other quantities as well.

(5) Suitability of additional devices

(i) Measuring systems shall incorporate a transfer point. This transfer point is located down stream of the meter.

(ii) No means shall be provided by which any measured gas can be diverted down stream of the meter during the filling operation.

(iii) Two or more delivery transfer points may

be permanently installed and operated simultaneously or alternately provided so that any diversion of gas to other than the intended receiving receptacle(s) cannot be readily accomplished or is readily apparent. Such means include, for example, physical barriers, visible valves or indications that make it clear which transfer points are in operation, and explanatory signs, if necessary.

(iv) When only one transfer point can be used during a delivery, and after the transfer point has been replaced, the next delivery shall be inhibited until the indicating device has been reset to zero.

When two or more transfer points can be used simultaneously or alternately, and after the utilized transfer points have been replaced, the next delivery shall be, inhibited until the indicating device has been reset to zero. Moreover, by design, the provisions of paragraph 2 sub-paragraph (5) clause (iii) shall be fulfilled.

(v) The system shall be designed in order to ensure that the measured quantity is delivered. In particular if the hose down stream of the meter is likely to be de-pressurized between two deliveries, this shall lead for instance to systematic correction or re-pressurizing before counting.

Whatever is the operating principle, in particular what constitutes the hose or the transfer point, in the worst measuring conditions, the mass which is measured but not delivered shall be smaller than or equal to half the minimum specified mass deviation.

Note: The purpose of this provision is not to allow a systematic deviation. This shall be verified by design examination, tests or calculation.

(vi) If there is a risk that the supply conditions can overload Q_{max} of the meter, a flow limiting device shall be provided. It shall be possible to seal it.

(vii) A pressure gauge shall be permanently installed on the measuring system in order to check P_{max} and P_{min}.

2. Metrological requirements for measuring systems and meters

(1) Maximum permissible errors and other metrological characteristics

(i) Without prejudice to paragraph 2 sub-paragraph (1) clause (iii) the maximum permissible relative errors on mass indications, positive or negative, at model approval are,

— ± 1% of the measured quantity for the meter alone, and

— ± 1.5% of the measured quantity for the complete measuring system.

(ii) The maximum permissible relative errors on mass indications, positive or negative, at initial verification or subsequent verifications and when these verifications are performed under rated operating conditions on-site of use, are ± 2% of the measured quantity for the complete measuring system.

(iii) The maximum permissible errors applicable to the minimum measured quantity are twice the corresponding values stated in paragraph 2, sub-paragraph (1), clause (i).

So the minimum specified mass deviation (E_{min}) for the measuring system is given by the formula:

$E_{min} = 3 \times M_{min} / 100$

Where M_{min} is the minimum measured quantity having the form specified in paragraph 1, sub-paragraph (3), clause (ii).

Note: The minimum specified mass deviation is an absolute maximum permissible error.

(iv) Whatever the measured quantity may be, the magnitude of the maximum permissible error (expressed as an absolute error) for the complete system is never less than the minimum specified mass deviation.

(v) For any quantity equal to or greater than 1000 scale intervals, the repeatability error of the meter shall not be greater than ± 0.6%.

(vi) Within their field of operation, meters shall present a magnitude of the difference between the initial intrinsic error and the error after the endurance test equal to or less than ± 1%.

The requirement on repeatability applies after the endurance test.

(2) Conditions for applying maximum permissible errors

(i) Maximum permissible errors apply for all gas, all temperatures and all pressures of

the gas, and all flow rates for which the system or the meter is intended to be approved.

A measuring system or a meter shall be capable of fulfilling all requirements without adjustment or modification during the relevant evaluation procedure.

(ii) When stated in the model approval certificate, a verification of a measuring system or of a meter intended to measure gas may be carried out with air (or with another fluid). In this case and if necessary, the pattern approval certificate provides a smaller range or a shift for maximum permissible errors, so that maximum permissible errors are fulfilled for gas.

3. Requirements for meters and ancillary devices of a measuring system

The meter and ancillary devices of a measuring system shall meet the following requirements, whether or not they are subject to a separate model approval:—

(1) Meter

(i) *Field of operation*

The field of operation of a meter is determined at least by the following characteristics:—

— minimum measured quantity,

— measuring range limited by the minimum flow rate, Q_{min}, and the maximum flow rate, Q_{max},

— maximum pressure of the gas, P_{max},

— if appropriate, nature and characteristics of the gases to be measured,

— maximum temperature of the gas, T_{max},

— minimum temperature of the gas T_{min}.

The temperature range shall be +10°C to + 40°C.

(ii) *Metrological requirements*

See paragraph 2 under Heading—B.

(iii) *Connections between the flow sensor and the indicating device*

The connections between the flow sensor and the indicating device shall be reliable and, for electronic devices, durable.

(iv) *Adjustment device*

Meters may be provided with an adjustment device which permits modification of the ratio between the indicated mass and the actual mass of gas passing through the meter, by a simple command.

When this adjustment device modifies this ratio in a discontinuous manner, the consecutive values of the ratio shall not differ by more than 0.001.

Adjustment by means of a by pass of the meter is prohibited.

(v) *Correction device*

Meters may be fitted with correction devices; such devices are always considered as an integral part of the meter. The whole of the requirements which apply to the meter, in particular the maximum permissible errors specified in paragraph 3 sub-paragraph (1) clause (iii) of Heading—B, are therefore applicable to the corrected mass.

In normal operation, non-corrected mass shall not be displayed.

The aim of a correction device is to reduce the errors as close to zero as possible.

Note: The use of this device for adjusting the errors of a meter to values other than as close as practical to zero is forbidden, even when these values are within the maximum permissible errors.

The correction device shall not allow the correction of a pre-estimated drift in relation to times or mass, for example.

The accuracy of associated measuring instruments shall be good enough to permit that the requirements on the meter be met as specified in paragraph 2, sub-paragraph (3) of Heading—B.

Associated measuring instruments shall be fitted with checking devices, as specified in paragraph 4, sub-paragraph (3) clause (vi) of Heading—B.

(2) Indicating device

(I) Measuring systems shall be equipped with digital indicating devices. The decimal sign shall appear distinctly.

(II) The continuous display of mass during the period of measurement is mandatory.

(III) The height for the figures of the indicating device shall be equal to or greater than 10 millimetre.

(3) Zero setting device

(i) Measuring systems shall be equipped with a device for resetting the mass indicating device to zero.

(a) The zero setting device shall not permit any alteration of the measurement result shown by the mass indicating device (other than by making the result disappear and displaying zeros).

(b) Once the zeroing operation has begun it shall be impossible for the mass indicating device to show a result different from that of the measurement which has just been made, until the zeroing operation has been completed.

The measuring system shall not be capable of being reset to zero during measurement.

(ii) If the system also includes a price indicating device, this indicating device shall be fitted with a zero resetting device.

The zero setting devices of the price indicating device and of the mass indicating device shall be designed in such a way that zeroing either indicating device automatically involves zeroing the other.

(iii) If the measuring system is fitted with a printing device, any printing operation shall not be possible in the course of a measurement and further delivery shall only be possible after a reset: to zero has been performed. However, the printing operation shall not change the quantity indicated on the indicating device.

(iv) If the measuring system is designed so that registration of mass could occur without any effective flow rate, a device shall register this apparent flow rate and compensate the measurement result for it.

(4) Price indicating device

(i) A mass indicating device may be complemented with a price indicating device which displays both the unit price and the price to be paid.

The monetary unit used or its symbol shall appear in the immediate vicinity of the indication.

(ii) The selected unit price shall be displayed by an indicating device before the start of the measurement to unit price shall be adjustable; changing the unit price may be carried out either directly on the measuring system or through peripheral equipment.

The indicated unit price at the start of a measurement operation shall be valid for the whole transaction. A new unit price shall only be effective at the moment a new measurement operation may start.

A time of at least five seconds shall elapse between indicating a new unit price and before the next measurement operation can start, if the unit price is set from peripheral equipment.

(iii) Only rounded errors pertaining to the least significant digit of the price to be paid are authorized.

(5) Printing device

(i) The mass printed shall be expressed in multiples or sub-multiples of kilogram for the indication of mass.

The figures, the unit used or its symbol and the decimal sign, if any, shall be printed on the ticket by the device.

(ii) The printing device may also print information identifying the measurement such as: sequence number, date, identification of the measuring system, type of gas, etc. If the printing device is connected to more than one measuring system, it must print the identification of the relevant system.

(iii) If a printing device allows repetition of the printing before a new delivery has started, copies shall be clearly marked as such, for example by printing "duplicate".

(iv) The printing device shall print, in addition to the measured quantity, either the corresponding price and the unit price.

(v) The printing devices are also subject to the requirements in paragraph 4, sub-paragraph (3), clause (v) of Heading—B.

(6) Memory device

(i) Measuring systems may be fitted with a memory device to store measurement results until their use or to keep a trace of commercial transactions, providing proof in case of a dispute. Devices used to read stored information are considered as included in the memory devices.

(ii) The medium on which data are stored must have sufficient permanency to ensure that the data are not corrupted under normal storage conditions. There shall be sufficient data memory storage for any particular application and for roadside measuring systems data storage for at least one month corresponding to normal use shall be available.

(iii) When the storage is full, it is permitted to delete memorized data when both the following conditions are met:—

(a) data are deleted in the same order as the recording order and the rules established for the particular application are respected,

(b) deletion is carried out after a special manual operation.

(iv) Memorization shall be such that it is impossible in normal use to modify stored values.

(v) Memory devices shall be fitted with checking facilities according to paragraph 4, sub-paragraph (3), clause (v) of Heading—B. The aim of the checking facility is to ensure that stored data correspond to the data provided by the calculator and that restored data correspond to stored data.

(7) Pre-setting device

(i) The selected quantity is pre-set by operating a digital device which indicates that quantity. The pre-set quantity shall be indicated before the start of the measurement.

(ii) Where it is possible to view simultaneously the figures of the display device of the pre-setting device and those of the mass indicating device, the former shall be clearly distinguishable from the latter.

(iii) Indication of the selected quantity may, during measurement, either remain unaltered or return progressively to zero.

(iv) The difference found under normal operating conditions, between the pre-set quantity and the quantity shown by the mass indicating device at the end of the measurement operation, shall not exceed the minimum specified mass deviation.

(v) The pre-set quantities and the quantities shown by the mass indicating device shall be expressed in the same unit. This unit or its symbol shall be marked on the pre-setting device.

(vi) The scale interval of the pre-setting device shall be equal to the scale interval of the indicating device.

(vii) Pre-setting devices may incorporate a device to permit the flow of gas to be stopped quickly when necessary.

(viii) Measuring systems with a price indicating device may also be fitted with a price pre-setting device which stops the flow of the gas when the quantity delivered corresponds to the pre-set price. The requirements in clauses (i) to (vii) of sub-paragraph (7) of paragraph 3 of Heading—B apply by analogy.

(8) Calculator

(i) The maximum permissible errors, positive or negative, on the gas quantity indications applicable for the calculators when they are checked separately shall be 0.05 per cent of the true value.

(ii) All factors necessary for the elaboration of indications such as unit price, calculation table, correction polynomial, etc. shall be present in the calculator at the beginning of the measurement operation.

(iii) The calculator may be provided with interfaces permitting the coupling of peripheral equipment. When these interfaces are used, the instrument shall continue to function correctly and its metrological functions shall not be capable of being affected.

4. Technical requirements for electronic devices

(1) General requirements

(i) Electronic measuring systems shall be designed and manufactured such that their errors do not exceed the maximum permissible errors as defined in paragraph 2 sub-paragraph (1) under rated operating conditions.

(ii) Electronic measuring systems shall be designed and manufactured such that, when they are exposed to the disturbances:

— either (a) significant faults do not occur,

—or (b) significant faults are detected and acted upon by means of checking facilities.

This provision may apply separately to:

— each individual cause of significant fault and/or,

— each part of the measuring system.

(iii) The requirements in paragraph 4, sub-paragraph (1), clause (i) and paragraph 4, sub-paragraph (1), clause (ii) of Heading—B shall be met durably. For this purpose, electronic measuring systems shall be provided with the checking facilities specified in paragraph 4, sub-paragraph (3) of Heading—B.

(iv) Electronic measuring systems shall be such that the delay time between the measurement value and the corresponding indicated value shall not exceed 500 milli second.

(v) A model of a measuring system is presumed to comply with the requirements in sub-paragraph (1) of paragraph 4 of this Heading if it passes the examination and tests specified in paragraph 7, sub-paragraph (1) clause (ix) sub-clauses (a) and (b) of Heading—B.

(2) Power supply device

(i) A measuring system shall be provided with an emergency power supply device allowing

— either (a) to safeguard all measuring functions during a failure of the principal power supply,

— or (b) that data contained at the moment of a failure leading to stopping the flow are saved and displayable on an indicating device for sufficient time to permit the conclusion of the current transaction.

The absolute value of the maximum permissible error for the indicated mass, in the second case, is increased by 5 per cent of the minimum measured quantity.

(ii) In case of a failure leading to stopping the slow, measuring systems shall be such that the minimum duration of operation of the display shall be either

— continuously and automatically at least 15 minutes following immediately the failure of the principal electrical supply, or

— a total of at least 5 minutes in one or several periods controlled manually during one hour following immediately the failure.

Note : During model approval the instrument has to be supplied with electric power normally for 12 hours which preceded the test. Before this supply the battery (if provided) may be uncharged.

In addition, measuring systems shall be designed so that an interrupted delivery cannot be continued after the power supply device has been re-established if the power failure has lasted more than 15 seconds.

(3) Checking facilities

(i) *Action of checking facilities*

The detection by the checking facilities of significant faults shall result in the following actions:—

(a) automatic correction of the fault, or

(b) stopping only the faulty device, when the measuring system without that device continues to comply with the regulations, or

(c) stopping the flow.

(ii) *Checking facilities for the measurement transducer*

The objective of these checking facilities is to verify the presence of the transducer, its correct operation and the correctness of data transmission.

These checking facilities shall be of type P and the checking shall occur at time intervals not exceeding the duration of the measurement of an amount of gas equal to the minimum specified mass deviation.

It shall be possible during model approval and initial verification to check that these checking facilities function correctly—

(a) by disconnecting the transducer, or

(b) by interrupting one of the sensor's pulse generators, or

(c) by interrupting the electrical supply of the transducer.

(iii) *Checking facilities for the calculator*

The objective of these checking facilities is to verify that the calculator system functions correctly and to ensure the validity of the calculations made.

There are no special means required for indicating that these checking facilities function correctly.

(a) The checking of the functioning of the calculation system shall be of type P or I. In the latter case, the checking shall occur at least every five minutes in the course of a delivery but at least once during a delivery.

The objective of the checking is to verify that—

(a-1) the values of all permanently memorized instructions and data are correct, by such means as

— summing up all instruction and data codes and comparing the sums with a fixed value,

— line and column parity bits,

— cyclic redundancy check,

— double independent storage of data,

— storage of data in "safe coding", for example protected by check sum, line and column parity bits.

(a-2) all procedures of internal transfer and storage of data relevant to the measurement result are performed correctly, by such means as

— write-read routine,

— conversion and re-conversion of codes,

— use of "safe coding" (check sum, parity bit),

— double storage.

(b) The checking of the validity of calculations shall be of type P. This consists of checking the correct value of all data related to the measurement whenever these data are internally stored or transmitted to peripheral equipment through an interface; this check may be carried out by such means as parity bit, check sum or double storage. In addition, the calculation system shall be provided with a means of controlling the continuity of the calculation program.

(iv) *Checking facility for the indicating device*

The objective of this checking facility is to verify that the primary indications are displayed and that they correspond to the data provided by the calculator. In addition, it aims at verifying the presence of the indicating devices, when they are removable. The control may be performed according to either the first possibility in paragraph 4, sub-paragraph (3), clause (iv) sub-clause (b) or the second possibility in paragraph 4, sub-paragraph (3), clause (iv) sub-clause (c) of Heading—B.

(a) It shall be possible during verification to determine that the checking facility of the indicating device is working, either

— by disconnecting all or part of the indicating device,

— or by an action which simulates a failure in the display, such as using a test button.

(b) The first possibility is to control automatically the complete indicating device. The checking facility of the indicating device is of type P; however, it may be of type I if a primary indication is provided by another device of the measuring system, or if the indication may be easily determined from other primary indications (for example, in the case of the presence of a price indicating device it is possible to determine the price to pay from the mass and the unit price).

Means may include, for example

— for indicating devices using incandescent filaments or light emitting diode, measuring the current in the filaments,

— for indicating devices using fluorescent tubes, measuring the grid voltage,

— for indicating devices using electro-magnetic shutters, checking the impact of each shutter,

— for indicating devices using multiplexed liquid crystals, output checking of the control voltage of

segment lines and of common electrodes, so as to detect any disconnection or short-circuit between control circuits.

(c) The second possibility is on the one hand to check automatically the electronic circuits used for the indicating device except the driving circuits of the display itself and on the other hand to check the display.

The automatic checking facility of the electronic circuits used for the indicating device is of type P; however, it may be of type I if a primary indication is provided by another device of the measuring system, or if the indication may be easily determined from other primary indications (for example, in the case of the presence of a price indicating device it is possible to determine the price to pay from the mass and the unit price).

The checking facility of the display shall provide visual checking of the entire display which shall meet the following description:—

— displaying all the elements ("eights" test if appropriate)

— blanking all the elements ("blank" test)

— displaying "zeros"

Each step of the sequence shall last at least 0.75 second.

This visual checking facility shall be of type I but it is not mandatory for a malfunction to result in the actions described in paragraph 4, sub-paragraph (3), clause (i) of Heading-B.

(v) *Checking facilities for ancillary devices*

An ancillary device (repeating device, printing device, self-service device, memory device, etc.) with primary indications shall include a checking facility of type I or P. The object of this checking facility is to verify the presence of the ancillary device, when it is a necessary device, and to verify the correct transmission of data from the calculator to the ancillary device.

In particular, the checking of a printing device aims at ensuring that the printing controls correspond to the data transmitted by the calculator. At least the following shall be checked:—

(a) presence of paper, and

(b) the electronic control circuits (except the driving circuits of the printing mechanism itself).

It shall be possible during model approval and other verifications to check that the checking facility of the printing device is functioning by an action simulating a printing fault, such as using a test button.

Where the action of the checking facility is a warning, this shall be given on or by the ancillary device concerned.

(vi) *Checking facilities for the associated measuring instruments*

Associated measuring instruments shall include a checking facility of type P. The aim of this checking facility is to ensure that the signal given by these associated instruments is inside a pre-determined measuring range.

Examples:

— four wire transmission for resistive sensors,

— frequency filters for density meters,

— control of the driving current for 4—20 mA pressure sensors.

5. Technical requirements, for measuring systems with self-service arrangement

(1) General requirements

(i) Where the self-service device serves two or more measuring systems, each measuring system shall be provided with a measuring system identification number that shall be accompanied by a primary indication provided by the self-service device.

(ii) Indication of information that is not subject to metrological control is allowed, provided that it cannot be confused with metrological information.

(iii) The control device of the self-service device should be capable of indicating the status of the measuring system (e.g. running, authorized or unauthorized) that are connected to the self-service device and in the case of multiple modes of service and/or type of payment also that particular status of the measuring system.

(iv) A change of the type of payment and/or mode of operation shall not be effective before the end of the current measurement operation.

(v) The self-service arrangement, including provisions related to clearly defined methods of operation, shall be such that at least one primary indication for the benefit of the customer must be available at least up to the settlement of the transaction to enable the delivered quantity and the price to pay to be checked.

(vi) In the case of a self-service arrangement that totalizes the delivered mass for different registered customers over the course of time, the minimum measured quantity is not affected by the scale interval used for such tantalizations.

(2) Attended service mode

If the measuring system indicating device provides the only primary indication, provisions shall be made to inform die customer that die next authorization of a particular measuring system can only be given by the supplier after settlement of the current transaction.

(i) *Attended post-payment*

(a) Where the self-service arrangement includes a device that provides an additional primary indication (additional to those of the indicating device of the measuring system), it shall consist of at least one installation for the reproduction of the mass and/or the price indicated by the measuring system indicating device, consisting of

— a printing device for the issue of a receipt to the customer, or

— an indicating device for the benefit of the supplier together with a display for the benefit of the customer.

(b) For self-service devices with temporary storage (temporary storage mode) of measurement data of measuring system the following requirements apply:—

(b-1) temporary storage of measurement data shall be restricted to one delivery for each measuring system,

(b-2) the primary indication shall be accompanied by a clear mark representing the sequence. For example, the number 1 or 2 or the letter A or B,

(b-3) when a primary indication of the self-service device is out of service, die self-service arrangement may continue its operation provided that it no longer uses any temporary storage, and that the measuring system indicating device remains the primary indication.

(c) Where the mandatory primary indication for the benefit of the customer is provided by a device in the form of a separate constructional unit and this unit becomes uncoupled, or if the checking facilities detect a malfunction, the temporary storage mode shall be prohibited and the measuring system indicating device remains the primary indication.

(ii) Pre-payment in attended service mode

(a) The requirements of paragraph 3, sub-paragraph (7) of Heading-B are applicable.

(b) A printed or hand-written receipt of the pre-paid amount shall be provided.

(3) Unattended service mode

(i) *General*

(a) The self-service arrangement shall provide additional primary indications by means of

— a printing device for the issue of a receipt to the customer, and

— a device (printing or memory device) on which measurement data are registered for the benefit of the supplier.

(b) When the printing devices or memory device, as required in paragraph 5, sub-paragraph (3), clause (i), sub-clause (a) are not able to provide any indication or become unserviceable, the customer shall be clearly warned by automatic means before the operation commences.

Passing from attended to unattended service mode shall not be possible before correct operation of the arrangement is concluded as feasible by the checking facilities, including compliance with the above provision.

474 GI/11-158

(c) Where the self-service arrangement is used by registered customers, the provisions of sub-clauses (a) and (b) of clause (i) of sub-paragraph (3) of paragraph 5 do not apply to measurements related to such customers. An additional individual mass totalizer is considered to provide a primary indication.

(d) Micro-processors, which upon disturbance or interference influence the measurement operation, shall be equipped with means for controlling the continuity of the processor program and for ensuring the discontinuation of the current delivery when the continuity of the processor program is no longer ensured.

The next effective acceptance of notes, cards or other equivalent mode of payment shall only take place if the continuity of the processor program is re-established.

(e) When a power supply failure occurs, the delivery data shall be memorized. The requirements of paragraph 4, sub-paragraph (2), clause (ii) of Heading-B shall apply.

(ii) *Delayed payment*

The printed and/or memorized indications as mentioned in paragraph 6 sub-paragraph (3) clause (i) of Heading-B shall contain sufficient information for further checking and at least, the measured quantity, the price to pay and information to identify the particular transaction (e.g., the measuring system number, location, date, time).

(iii) *Pre-payment in unattended service mode*

(a) Following the termination of each delivery, the printed and/or memorized indications as intended in paragraph 5, sub-paragraph (3), clause (i) of Heading-B shall be made available, clearly indicating the amount which has been pre-paid and the price corresponding to the gas obtained.

These printed and/or memorized indications may be divided into two parts as follows:—

(a) one part provided prior to the delivery on which the pre-paid amount is shown and recognizable as such,

(b) one part provided following the termination of delivery, provided that it is clear from the information provided on both parts that they are related to the same delivery.

(b) The requirements of paragraph 3 sub-paragraph (7) are applicable.

6. Markings and sealing

(1) Marking

(i) Each measuring system, component or sub-system for which model approval has been granted shall bear, placed together legibly and indelibly either on the dial of the indicating device or on a special data plate, the following information:—

(a) model approval sign,

(b) manufacturer's identification mark or trademark,

(c) designation selected by the manufacturer, if appropriate,

(d) serial number and year of manufacture,

(e) characteristics as defined in paragraph 1, sub-paragraph (3), clause (i) and paragraph 3, sub-paragraph (1), clause (i) of Heading-B,

(f) where relevant, the maximum allowed speed for the sequential control device (the tested one).

Note: The indicated characteristics should be the actual characteristics of use, if they are known when the plate is affixed. When they are not known, the indicated characteristics are those allowed by the model approval certificate.

However, the minimum and the maximum temperatures of the gas shall appear on the data plate only when they differ from −10 degree Centigrade and +40 degree Centigrade respectively.

The minimum measured quantity of the measuring system shall in all cases be clearly visible on the dial of any indicating device visible to the user during the measurement.

When a measuring system can be transported without being dismantled, the markings required for each component may also be combined on a single plate.

(ii) Any information, markings or diagrams specified shall be clearly visible on the dial of the indicating device or within proximity to it.

The markings on the dial of the indicating device of a meter forming a part of a measuring system shall not contravene those on the data plate of the measuring system.

(2) Sealing devices and stamping plate:

(i) *General*

Sealing is preferably carried out by means of lead seals. However, other types of sealing are permitted on fragile instruments or when these seals provide sufficient integrity, electronic seals for instance.

The seals shall, in all cases, be easily accessible.

Sealing should be provided on all parts of the measuring system which cannot be materially protected in any other way against operations liable to affect the measurement accuracy.

Sealing devices shall prohibit changing of any parameter that participate in the determination of measurement results (parameters for correction and conversion in particular).

A plate, referred to as the stamping plate, aimed at receiving the control marks, shall be sealed or permanently attached on a support of the measuring system. It may be combined with the data plate of the measuring system referred to in paragraph 6, sub-paragraph (1) of Heading-B.

(ii) *Electronic sealing devices*

(a) When access to parameters that participate in the determination of results of measurement is not protected by mechanical sealing devices, the protection shall fulfil the following provisions:—

(a-1) access shall only be allowed to authorized people, by means of a special device (hard key, etc.). Only a code is not considered as fulfilling this provision;

(a-2) it shall be possible for at least the last hundred interventions to be memorized; the record shall include the date with time and characteristic elements identifying the authorized person making the intervention [see (a) above] and the value of the parameters changed the traceability of these interventions shall be assured for at least two years, if it is not over-written on the occasion of a further intervention; if deletion of a previous intervention must occur to permit a new record, the oldest record shall be deleted.

(b) For measuring systems with parts which may be disconnected one from another by the user and which are interchangeable, the following provisions shall be fulfilled:—

(b-1) it shall not be possible to access parameters that participate in the determination of results of measurements through disconnected points unless the provisions in paragraph 6, sub paragraph (2), clause (ii), sub clause (a) of Heading-B are fulfilled;

(b-2) interposing any device which may influence the accuracy shall be prevented by means of electronic and data processing securities or, if not possible, by mechanical means.

(c) For measuring systems with parts which may be disconnected one from another by the user and which are not interchangeable, the provisions in paragraph 6, sub-paragraph (2), clause (ii) sub-clause (b) of Heading-B apply. Moreover, these measuring systems shall be provided with devices which do not allow them to operate if the various parts are not associated according to the manufacturer's configuration.

Note: Disconnections which are not allowed to the user may be prevented, for example by means of a device that prevents any measurement after disconnecting and reconnecting.

7. Metrological control

When a test is conducted, the expanded uncertainty on the determination of errors on indications of mass shall be less than one-fifth of the maximum permissible or tolerance applicable for that test on model approval and one-third of the maximum permissible error applicable for that test on other verifications.

However, this provision may not be fulfilled for tests at the minimum measured quantity or twice this value.

Note: The expanded uncertainty includes components of uncertainties that are in relation to the instrument to be verified, in particular its scale interval and, if applicable, the periodic variation. However the repeatability error of the meter or device to be verified shall not be included in the uncertainty.

(1) Model approval

(i) *General*

Measuring systems subject to legal metrology control shall be subjected to model approval.

The test aims at verifying that the measuring system complies with the provisions of paragraph 2 sub-paragraph (1), clauses (ii) and (iii) within the field of operation. The test will be conducted as per the procedure outlined in Annexure.

ANNEXURE

Tests for determination of error of compressed gaseous fuel measuring system fitted with mass flow meter at the time of verification/re-verification.

1. Determine the tare weight of empty Compressed Natural Gas cylinder using weighing instrument of appropriate capacity, with verification scale interval of 10 g or less.
2. Thereafter the cylinder be connected to the Compressed Gaseous fuel measuring system be filled to the extent of approximately 10 kilogram.
3. From the initial and final weight of the cylinder, the weight of the CNG actually filled in the cylinder (T) is determined.
4. From the initial and the final readings of the measuring system, the CNG filled as indicated by the system (I) be determined.
5. The percentage of error of the measuring system is given by the formula :

$$\text{Error in percentage} = \frac{I - T}{T} \times 100$$

NINTH SCHEDULE

PROCEDURE FOR CARRYING OUT CALIBRATION OF VEHICLE TANKS, ETC.

[See Rule 14]

PART I

CALIBRATION OF VEHICLE TANKS FOR PETROLEUM PRODUCTS AND OTHER LIQUIDS

1. Definitions

(a) *Vehicle tank*—An assembly used for measurement and delivery of liquids comprising a tank which may or may not be sub-divided into compartments, mounted upon a vehicle together with its necessary piping, valves, meters, etc.

(b) *Compartment*—The entire tank, when this is not sub-divided; otherwise any one of these sub-divisions of a tank designed to hold liquid.

(c) *Calibration*—Verification and stamping of the capacity of the vehicle tank or its compartments.

(d) *Dip stick*—A square or rectangular metal bar of brass or any other suitable hard material used to determine the depth of the liquid in the tank.

(e) *Ullage stick*—A T-shaped metal bar of brass or other suitable material used to determine the depth of the level of liquid from the proof level.

(f) *Ullage indicator*—A device bolted to the inside of a manhole neck ring with the indicator set to any desired level to which liquid in the tank is required to be filled.

(g) *Proof level*—Reference level to which all depth measurements shall be related.

(h) *Dip pipe*—A pipe rigidly attached at the top of the tank extending vertically downward up to approximately 15 cm from the bottom of the tank. The pipe shall have perforations at the top above the maximum liquid level.

2. Testing medium

(a) *Compartment testing*—Water or other appropriate liquid shall be used as a testing medium in determining the capacity of vehicle tank compartment.

(b) *Meter testing*—A vehicle tank meter shall be tested with a liquid of the same character or of approximately the same viscosity as the liquid to be measured through the meter.

3. Equipment and tools

The following equipment and tools are required for calibration of vehicle tank.

(a) *Proving measures*—When available, shall be checked for accuracy against an appropriate working standard measure.

(b) *Calibrated bulk meter*—An accurate meter fitted with a pre-set valve, air eliminator and strainer, which has been checked for accuracy against an appropriate working standard measure.

(c) A set of standard commercial measures.

(d) Other equipment and tools, viz. hose pipe, scriber, punch, try square, tyre pressure gauge, hammer, etc.

4. Calibration procedure

(a) Vehicle tanks used as measures shall be calibrated as capacity measures. In the case of meter equipped tanks the meter shall be treated as a separate measuring instrument for purpose of calibration.

(b) The compartment capacity or capacities shall be taken as including the capacities of the delivery lines leading from the emergency, safety or master valve to the outlet valve (discharge valve)

provided that in the case of vehicle compartment terminating in a single delivery pipeline fitted with an outlet valve, the compartment capacity or capacities shall be taken as excluding the capacity of the delivery pipeline. A notice shall be prominently exhibited on the vehicle tank indicating clearly and indelibly the following :—

Marked capacity includes capacity of delivery line; or

Marked capacity excludes capacity of delivery line (as the case may be).

The safety or master valve shall be positioned at the lowest point of outlet from the compartment.

(c) The proving measure or bulk meter should be mounted on an overhead gantry or a separate framework in a convenient position above a firm and level platform, preferably of concrete on which the vehicle stands during calibration.

(d) The vehicle shall be placed in a level position before commencing calibration as the accuracy of calibration depends on the level of the tank; the sequence in which compartments are calibrated should be such as to minimise unequal spring deflection on the axles of the vehicle.

(e) The front and rear tyres of the vehicle should be at the correct pressures. The tyres should be inspected for wear which should be reasonably even and there should not be excessive difference in the tread between the front set of tyres and the rear set at the time of calibration.

(f) The interior of the compartment should be inspected and cleaned where necessary.

(g) Before starting calibration, the pipelines, outlet valves and other connections shall be tested against leakage by partially filling and draining each compartment in turn through the outlet valve. During the process sufficient quantity of the testing medium should be introduced inside the compartment to wet the internal surface of the tank and pipelines.

(h) After taking the precautions mentioned above, the compartment to be calibrated shall be filled with appropriate proving measures or bulk meters to the marked capacity of the compartment with the delivery lines leading to the outlet valve full or empty as provided in (b) above. The dip/ullage mark shall be taken carefully and the line shall be cut on the dip/ullage stick at right angles to the axis with the help of try-square and scriber. If an ullage indicator is used, it shall be correctly set and sealed.

(i) A mark shall also be made on the dipstick to indicate the 'proof level'. In the case of ullage stick, the distance from the ullage point to the T-joint shall be marked on the stick.

Note: The sequence for calibrating compartments should be sequence of filling them. The sequence of discharge shall be in the reverse order to that of filling.

(j) Each compartment should be left full before proceeding to the next in sequence.

5. Maximum permissible error

(a) Proving measures shall have the following capacities and shall be adjusted within the following permissible errors:—

Capacity, Litres	*Permissible error, millilitres* (±)
50	50
100	100
200	200
500	500
1000	1000
1500	1500
2000	2000
5000	5000

(b) The maximum error for vehicle tank compartments shall be 0.05 per cent in excess of the marked capacity of the compartments.

6. Markings

(a) The vehicle shall have a brass plate riveted in a prominent position on it to receive the Legal Metrology Officer's stamps. The brass plate shall bear the following particulars: title of Legal Metrology Act, name of owner of vehicle, vehicle registration number, and the serial number and capacity of each compartment. Space should be provided on the plate for the Legal Metrology Officer's stamps. A simple design for a plate is shown below.

(b) The capacity of the compartment shall be indelibly marked on the manhole cover of the compartment and also painted on each side of the compartment so that it is clearly visible. If there are more than one compartment, then each compartment shall have its capacity marked separately as above and the compartment numbered serially. The number of the compartment shall also be marked on the discharge valve pertaining to the compartment.

(c) The vehicle registration number as well as the capacity of the compartment shall be indelibly marked on the dip/ullage stick at the top end. If there is more than one compartment, the different faces of one dip stick may be used for markings and each face shall bear the vehicle number, the serial number of the compartment, the proof and dip lines of that compartment and the capacity of the compartment.

THE LEGAL METROLOGY ACT, 2009

Name of the company : .....

Vehicle tank No. .....

Compartment Number	*Compartment Capacity (In litres)*	*Space for* Legal Metrology Officer's *stamp*

—NAME PLATE

PART II

METHOD FOR CALIBRATION OF VERTICAL OIL STORAGE TANKS

1. Scope

This Part prescribes methods for calibration of vertical tanks by strapping and internal measurements. These tanks are meant for bulk storage of petroleum and liquid petroleum products.

2. Conditions for measurements

(a) All data and methods, whereby measurements are obtained, necessary for the preparation of calibration tables, shall be in accordance with sound engineering principles.

(b) When drawings for the tank are available, all measurements shall be compared with those obtainable from the drawings and measurements showing discrepancies greater than the tolerance specified in 9(C), shall be verified. A similar process of check shall be employed in all cases where reliable information beyond the measurements taken, is available.

(c) Measurements shall be taken only after the tank has been filled at least once at its present location with the product to be stored to its working capacity or with water to its equivalent height, and such product or water has been held in the tank for at least 24 hours to allow for settling.

3. Interrupted measurements

If the calibration of a tank is required to be interrupted, it may be resumed with minimum delay, without repetition of work previously completed provided that:

(i) there is no major change in equipment and as far as possible, no change in personnel;

(ii) all records of work done are complete and legible; and

(iii) same hydrostatic head as before is maintained in the tank.

4. Descriptive data

(a) Complete description data shall be entered on the Tank Measurements Record Form being used. A recommended Record Form is shown in Table 1.

(b) Supplemental pencil sketches or notations each completed, identified, dated and signed, shall form an important part of field data. These shall be made to indicate typical horizontal and vertical joints, number of plates per course (ring), locations of courses (rings) at which thickness of plates changes, arrangement and size of angles of top and bottom of shell, location and sizes of pipes and manholes, dents and bulges in shell plates, direction of lean from vertical, method used in by-passing a large obstruction, such as clean-outbox or insulation box located in the path of a circumferential measurement, location of tape path, location and elevation of possible datum plate and all other items of interest and value which will be encountered.

TABLE 1

RECOMMENDED RECORD FORM FOR MEASUREMENTS OF VERTICAL TANKS *[Clause 4(a)]*

Report No. .....
Date.....

Tank No. .....
(Old Tank No.). .....
Owner's name .....
Plant or property name .....
Location .....
Manufactured by .....
Erected by .....
Description .....
Prepare ..... Copies ..... Increments in .....
Fraction to ..... Table form or size desired .....
Height: Shell ..... Gauging .....
Type of roof ..... Weight of floating roof .....
Tank contents ..... Name ..... Avg. liquid temp., °C .....
Gauge ..... cm or mm innage to shelf floor or outage:
Hydrometer reading ..... at ..... °C ..... Sample temperature
Gauging reference point to top of top angle ..... cm or mm ..... Normal
Service .....
Shell circumferences or diameters:
A ..... D ..... G .....
B ..... E ..... H .....
C ..... F ..... I .....

DESCRIPTIONS OF SHELL PLATES AND JOINTS :

Course (Rings) No.	*Thickness*	*Type of vertical joint*	*Set in or out*	*Width of lap strap*	*Thickness of strap*	*No. of joints*	*Exposed course (ring) height*	*Inside course (ring) height*
5.	.....	.....	.....	.....	.....	.....	.....	.....
4.	.....	.....	.....	.....	.....	.....	.....	.....
3.	.....	.....	.....	.....	.....	.....	.....	.....
2.	.....	.....	.....	.....	.....	.....	.....	.....
1.	.....	.....	.....	.....	.....	.....	.....	.....

BOTTOM COURSE (RING) SHELL CONNECTIONS:

No.	*Description*	*Elevation, top of floor to bottom of connection*
1.	.....	.....
2.	.....	.....
3.	.....	.....
4.	.....	.....

Type of bottom ..... Height of crown .....

Deadwood and remarks (Use reverse side if necessary) :

Description	No.	Size	*Elevation* From	To

Thickness .....

Measurements by.....Amount of tank lean from vertical

Circumference tape used .....

Date checked ..... at.....

Tank measured by ..... for .....

Deadwood and tank bottom—Use separate sheets. For each piece or item of deadwood record description, size, number of occurrences, and location related to other height measured data recorded.

Explanatory notes (such as type of bottom, height or depth of crown, etc.)

(c) All measurements made by the tank calibrator shall be recorded on site and shall not be subjected to subsequent correction.

5. Degree of accuracy

In order to obtain maximum obtainable accuracy in calibration tables, adjustments for effects of the following variables shall be incorporated in the tables:—

(i) Expansion and contraction of steel tank shell due to liquid heads,

(ii) Tilt from upright position, and

(iii) Tank bottoms that are irregular in shape.

Note: The degree of accuracy desired or required in the completed calibration table for a specific tank shall be the governing factory in determining the procedure to be followed.

6. Expansion and contraction of steel tank shells due to liquid head and temperature

These effects shall be eliminated by strapping the tank when it is at least two-thirds full with water or approximately full with the product [See also 2(c)]. The strapping record shall include water or product level from a known reference point, temperature of the tank contents and that of adjacent air.

SECTION I—CALIBRATION BY STRAPPING

7. General

(a) This method is based on the measurement of external circumferences which are subsequently corrected to yield the true internal circumstances.

(b) Circumferences shall be measured under conditions of liquid head as given under 2(c) and 6.

(c) The stipulated number of external circumference measurements, together with the subsidiary measurements, where necessary, to correct for deviation of the tape from the true circular path shall be obtained as described under 9.

(d) An internal diameter may be measured at approximately the same height as that at which a circumference has been measured, if verification of that circumferential measurement is desired.

(e) It may be necessary in practice to refer all tank dips to a datum point other than the datum point used for the purpose of tank calibration. If so, the difference in level between these datum points shall be determined either by normal surveying methods or by other suitable means.

(f) The overall height shall be measured, using dip-tape and dip-weight, from the dipping datum point to the reference point (the dipping reference point) on the dip hatch. This overall height shall be recorded and marked on the tank at the dip hatch.

8. Equipment

(a) *Steel tapes*—Shall comply with the specifications under Part VII of Sixth Schedule. The tape shall be greased well before use.

(b) *Spring balance*—Reading up to 10 kg with 0.1 kg graduations, for measuring the tension applied to the tape. It is preferable to have two balances. Spring balance shall comply with specifications given under Heading 'A' of Seventh Schedule.

(c) *Step-overs*—The step-over is a frame holding two scribing points rigidly and at such a distance apart as meets the conditions of use laid down under 9(d). The frame may be constructed of wood; it should be painted if required. This is used to correct deviation of the tape from its normal circular path, namely passing over fittings or joints between plates.

(d) *Dip-tape and dip-weight*—Complying with the specifications given under Part IX of Sixth Schedule.

(e) *Loops and cords*—One or more metal loops which can slide freely on the tape and to which are attached two cords each of sufficient length to reach from the top of the tanks to the ground. The tape is positioned and its tension evenly distributed by passing these loops around the tank.

(f) *Accessory equipment*

(i) Rope
(ii) Hooks
(iii) Safety belts
(iv) Ladders

(g) *Miscellaneous equipment*

(i) Steel rule
(ii) Spirit level
(iii) Awl and scriber
(iv) Marking crayon
(v) Record paper
(vi) Plumb line
(vii) Dumpy level
(viii) Positive displacement bulk meter

9. Circumference measurements

A. *Strapping levels*

Circumference shall be measured by a minimum of two strappings per course (ring) at the following levels :—

(a) For riveted tanks:

(i) At 7 per cent to 10 per cent of the height of exposed portion of each course (ring) above the level of the top of the bottom angle iron of the tank and above the upper edge of each horizontal overlap between courses (rings) (see A of Figure 56), and

(ii) at 7 per cent to 10 per cent of exposed portion of each course (ring) below the lower edge of each horizontal overlap between courses (ring) and below the level of the lowest part of the top angle iron of the tank (see B of Figure 56).

(b) For welded tanks :

(i) Two levels (see A and B of Figure 57), the upper and the lower levels, at the top and bottom of courses (rings) shall be 20 per cent of the height of the exposed portion of the respective course (ring) away from the angle irons or seams.

(ii) Circumferential tape parts, having been located at elevations as under (a) above shall be examined for obstructions and type of vertical joints. Projections of dirt and scale shall be removed along each path.

(iii) Occasionally, some feature of construction such as manhole or insulation box, may make it impracticable to use a circumference evaluation at the prescribed location. If the obstruction can be spanned by a stepover then the circumference shall be measured at the prescribed elevation, using a suitable method given under 9(d). If the obstruction cannot be conveniently spanned by a step-over, then a substitute path located nearer to the centre of the course (ring) may be chosen. The strapping record shall include the

location of the substitute path and reason for the departure.

(iv) The type and characteristics of vertical joints shall be determined by close examination in order to establish the method of measurement and equipment required. If the tape is not in close contact with the surface of the tank throughout its whole path owing to the vertical joints a stepover shall be applied so that a correction may be calculated to adjust the gross difference for this effect.

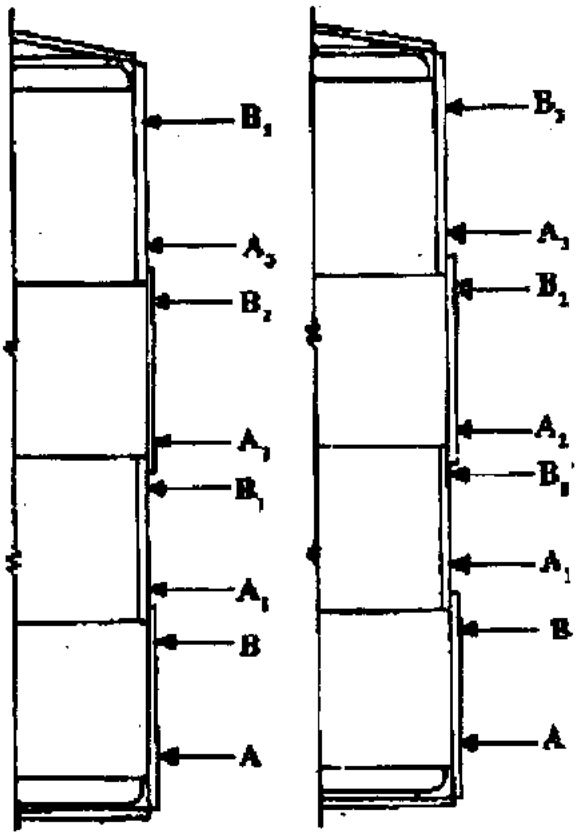

Fig: 2
LOCATION OF MEASUREMENTS OF WELDED TANKS

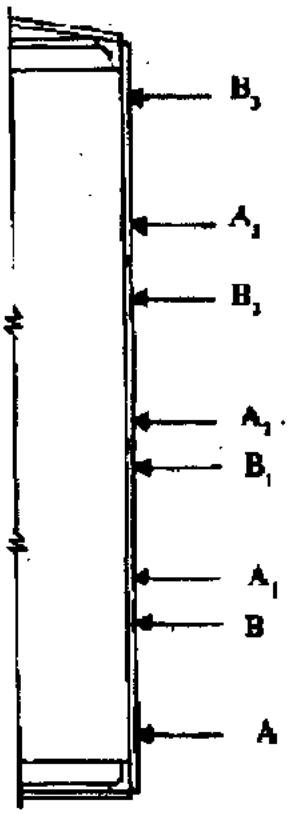

Fig:1
RIVETED

B. *Strapping procedure*

(i) The tank shall be strapped by either of the methods described under (ii) and (iii) below. In either case a tension of 4.5 ± 0.5 kg shall be applied to the tape and, if necessary transmitted throughout its length by suitable means, namely by means of metal loops sliding freely on the tape, the loops being passed around the tank by operators with the aid of light chain or cords. The tape path shall be parallel with the circumferential seams of the tank.

(ii) If the tape to be used is not long enough to encircle the tank completely, then after the level of the tape path has been chosen, fine lines shall be scribed perpendicular to this path to allow the circumference to be measured in sections. The scribed lines shall be drawn in the middle circumferential third of any plate at such distances as will ensure that the whole of the length of the tape used is under the observation of one or other of the calibrators. Subject to the conditions under 9(a)(iii) and 9(a)(iv) the external circumference of the tank is then the sum of the lengths between the scribed lines.

(iii) If the tape to be used can encircle the tank completely, then after the level of the tape path has been chosen, the tape is passed around the circumference and held so that the first graduated centimetre lies within

474 GI/11-160

the middle circumferential third of any plate. The other end of the tape shall be brought alongside. The tension is then applied through the spring balance and transmitted throughout the length of the tape.

(iv) After a circumference has been measured [see (iii) above], the tape shall be shifted a little around the tank, brought to level and tension as above, and the reading repeated. The final reading shall be the arithmetic average of the readings.

C. *Tolerances*

Measurements shall be read to the nearest 1 mm and within the following tolerances when readings are taken at the same point:—

Circumference	*Tolerance*
Up to 30 metres	± 2 mm
Over 30 and up to 50 metres	± 4 mm
Over 50 and up to 70 metres	± 6 mm
Over 70 and up to 90 metres	± 8 mm
Over 90 metres	± 10 mm

D. *Step-overs:*

(i) If the tape crosses obstructions, such as projections deformities, fittings or lapped joints, it will deviate from a true circular path and an erroneous circumferential measurement will result. In order to avoid such errors a 'step-over' is used to measure the correction to be applied for such obstructions.

(ii) *Construction*—A step-over is a frame rigidly holding two scribing points, and of such dimensions that the points may be applied to the tape well clear of the obstruction and of its effects on the tape path, while the frame itself does not touch either the obstruction or the tank shell. Rigidity of construction is essential; suitable designs are illustrated in Figure 3

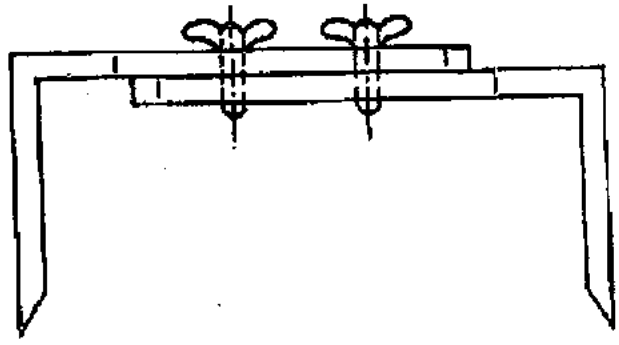

FIGURE-3

STEP-OVER

(iii) *Use of step-overs*

(a) For obstructions, the strapping tape shall be stretched as if in measurement of a circumference on the tank which is being calibrated, but not within 30 cm of any horizontal seam. The scribing points shall then be applied to the tape near the middle of a plate where the tape is fully in contact with the tank surface. The length between the points, as measured on the curved tape, is then read off as closely as possible, fractions of tape divisions being estimated. The readings shall be repeated on a minimum of two and maximum of four plates equally spaced around the circumference, and the average of the results taken, as the step-over will vary with the tank diameter and the course concerned since they are made on surface differently curved.

(b) With the tape still in position and under the tension used in strapping, the step-over shall be applied to the tape on either side of each obstruction lying on the tape path, and readings shall be taken of the lengths of tapes included between the scribing points. All step-over readings shall be recorded for subsequent use in calculation.

(c) Care shall be taken in placing the instrument in a truly level position at each obstruction to avoid distortions in circumferential path. In the case of a step--over of relatively long space, the use of a spirit level is recommended as an aid in determining its correct position before scribed marks are struck off on the places.

(d) When the butt-strap or lap joints, or tank shell, include rivets or other features which exert uneven effects on the resultant avoid between tape and tank from joint to joint, then a step-over will be required. The span of the instrument should be measured prior to use in accordance with (a) above. The two legs shall be separated by a distance sufficient to span each void between tape and shell encountered. The legs shall be of sufficient length to prevent contact between the

interconnecting member and the tank plate or obstruction. Stretch the tape over the joints and place the step-over in position at each location of void between tape and shell, completely spanning the void so that the scribing points contact the shell at an edge of the tape. The length of tape encompassed by the scribing points, with the tape maintained in proper position and tension, should be estimated to the nearest 0.5 mm. At each step-over location, therefore, the difference between the length of tape encompassed by the scribing points and the known span of the instruments is the effect of the void, at that point, on the circumference as measured. The sum of such difference in any given path, subtracted from the measured circumference, will give the corrected circumference.

10. Shell plate thickness

(a) Where the type of construction leaves the plate edges exposed, a minimum of four thickness measurements shall be made on each course (ring) at points approximately equally spaced about the circumference. The arithmetical average of the measurements for each course (ring) shall be recorded; all thickness measurements, properly identified, shall be noted on supplemental data sheet which shall form a part of the measurements record. Care shall be taken to avoid plate thickness measurements at locations where edges have been distorted by caulking.

(b) Where plate edges are concealed by the type of construction, the strapping record shall be marked 'not obtainable at tank'. Alternately, plate thickness measurement may be obtained as described under (c) below.

(c) Plate thickness measurements obtained before or during construction, and recorded on a properly identified strapping record may be acceptable. In the absence of any direct measurements of plate thickness obtained and recorded before or during construction either those shown on the fabricator's drawings may be accepted and so identified in the calculation records or any other practicable method may be used for measurements of plate thickness.

11. Vertical measurements

(a) A tape shall be suspended internally along the wall of the shell from the top curb angle to the bottom course (ring) and the height of the course (ring) measured to the nearest millimetre. The difference in height between the datum plate at which dip is taken and the bottom course (ring) shall be measured and the headings of the course (ring) height shall be transferred to the datum plate by applying the correction (see Figure 4).

Example: In Figure 4, the difference between bottom course (ring) and datum plate is 152-150.5 cm = 1.5 cm. Applying this correction the corrected height of the course (ring) at

B—307.5 cm C—468.5 cm D—623.5 cm E—798.5 cm

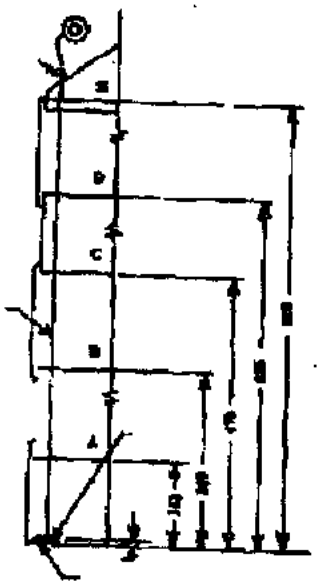

Bottom course (ring)

Figure 4

(b) When it is inconvenient to measure the course (ring) heights internally, then they shall be computed from external measurements, due allowance being made for the effect of horizontal seam overlaps. The heights obtained shall be the vertical distances, measured to the nearest 5 mm, between successive edges of the courses (rings) as exposed internally in the tank. For this purpose, in the cases of lap joints, it will be necessary to determine the width of lap in each course (ring).

(c) If necessary, heights at more than one vertical around the tank may be taken, and for each course (ring), an average of the results obtained.

12. Deadwood

(a) Any fitting which adds to or subtracts from the capacity of the tank is called deadwood. Deadwood shall be accurately accounted for, as to size and location to the nearest millimetre in order to permit,—

(i) adequate allowance for volumes of liquid displaced or admitted by the various parts; and

(ii) adequate allocation of the effects at various elevations within the tank.

(b) Deadwood should be measured, if possible, within the tank. Dimensions shown on the builder's drawings may be accepted if actual measurement is impracticable.

(c) Measurements of deadwood should show the lowest and highest levels, measured from the tank bottom adjacent to the shell, at which deadwood affects the capacity of the tank. Measurements should be in increments which permit allowance for its varying effect on tank capacity at various elevations.

(d) Large deadwood of irregular shape may have to be measured in separate sections suitably chosen.

(e) Work sheets on which details of deadwood are sketched, dimensioned and located, should be clearly identified and should become part of the strapping record.

(f) For variable deadwood, such as nozzles and manholes, encountered in the bottom one or two courses (rings) of the tanks, an average deadwood correction shall be made.

13. Tank bottoms

(a) *Flat type:*

(i) Tank bottoms which are flat and stable under varying liquid loads will have no effect on tank capacity depressed on the basis of geometric principles.

(ii) Where tank bottom conditions of irregularity, slope and instability exist, and where correct capacities cannot be determined conveniently from linear measurements alone, it shall be necessary to resort either to liquid calibration to floor survey.

(iii) Liquid calibration—The procedure in carrying out the liquid calibration is to fill into the tank quantities of known volume of water or other non-volatile liquid until the datum point is just covered and the total quantity recorded. Additional quantities shall then be added until the highest point of the bottom is just covered. This may be done in one or more stages as desired and the dip reading and quantity at each stage recorded. It is convenient for dip readings to be taken at intervals of approximately 3 cm, the successive intervals not necessarily being identical.

(a) This liquid may conveniently be measured into the tank by a positive displacement meter which should be previously calibrated for the liquid and rate of flow to be used. Alternatively, an accurately calibrated measure or tank may be used.

(iv) Volumes for the tank calibration table above this elevation shall be computed from linear measurements.

(v) Floor survey—The floor survey consists in recording levels of the floor by means of a dumpy level with the help of the spirit levels, the cross sections and the longitudinal sections of the entire floor may be computed. The levels when plotted will define the profile and the geometric pattern of the bottom of the tank. Thus the capacity of the tank may be calculated.

(vi) During the tank bottom calibration the difference in height between the datum plate and the bottom of the bottom course (ring) should be recorded, wherever possible.

(b) *Conical, hemispherical, semi-ellipsoidal and spherical segment:*

Tank bottoms conforming to geometrical shapes have volumes which may either be computed from linear measurements or measurements by liquid calibration by incremental filling or by floor survey, as desired. Any appreciable differences in shape affecting the volume, such as knuckle, radii, etc., shall be measured and recorded in sufficient detail to permit computation of the true volume.

14. Measurement of tilt

(a) Measurements shall be taken to determine the amount, if any, by which the tank is tilted. This can conveniently be done by suspending a plumb line from the top angle and measuring the offset at the bottom angle (see Figure 5). Alternatively, if the tank bottom is being calibrated by floor survey with a dumpy level as in 13(a)(v), the tilt can be estimated by taking reading along the periphery of the tank bottom. Also, if a liquid calibration of the bottoms is being made as outlined in 13(a)(iii), the tilt can be determined by taking measurements from the surface of the liquid to the bottom of the tank. In any of these methods, a sufficient number of measurements

shall be taken at different points on the circumference to determine the maximum offset.

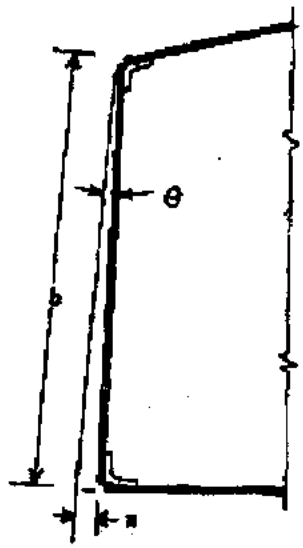

Figure 5

15. Floating-roof tanks

(a) All calibration measurements shall be made exactly as for tanks with fixed roofs.

(b) Liquid calibration for floating-roof displacement—

(i) Corrections for floating-roof displacement arising from the weight of the roof and the deadwood associated with it shall be allowed for in the calibration measurement.

(ii) If the weight of the floating-roof is accurately known, correction for the displaced liquid may be applied knowing density and temperature of the tank contents, at the time of determining the actual inventory.

(c) Alternatively, displacement due to the floating-roof and deadwood may be determined by admitting oil to the tank until the dip reading is just below the lowest point of the roof. Known quantities accurately determined (for example by flow meter or delivery from a portable tank or measure which has been accurately calibrated) are then admitted to the tank and the corresponding dip readings recorded at a number of suitable intervals until the point is reached when the roof just becomes oil borne. Record the density and temperature of oil used:

(i) It is advisable to use a liquid of nearly the same density as that for which the tank is intended. If this is not practical, water may be used and suitable corrections applied.

(ii) During liquid calibration any space under the roof that will trap gas should be vented to the atmosphere.

(iii) Before liquid calibration the height of the lowest joint of the roof with reference to datum point should be recorded, wherever possible.

(iv) To assess the point at which roof becomes oil borne the following procedure may be followed :—

"With the roof resulting fully on its supports, paint four short horizontal white lines about 3 cm wide on the tank sides in such a position that, viewed from some definite point, their lower edges are just above four similar lines marked on the roof edges or shoes. Then slowly pump oil into the tank; when all roof markings are seen to have moved upwards, regard the roof as oil borne, and take the dip reading of the oil at this level."

Alternatively, from some chosen viewpoint on the dipping platform, note the position of the roof against rivet heads on vertical seam or other markings on the tank walls instead of paint marks. In both cases extend the points of reference round the greater part of the tank interior, and see movement relative to all points.

(d) *Weight floating*—The floating weight of the entire roof shall include weight of roof plus half the weight of the rolling ladder and other hinged and flexibility supported accessories that are carried up and down in the tank with the roof. These are calculated by the tank fabricator and given on the drawing and on the roof name-plate.

(e) *Deadwood:*

(i) Fixed deadwood shall be measured as described in 12. The drain lines and other accessories attached to the underside of the roof shall be treated as fixed deadwood in the position they occupy when the roof is at rest on its supports.

(ii) When all or part of the weight of the roof is resting on its supports, the roof itself is deadwood and as the liquid level rises around the roof its geometric shape will determine how it should be

deducted. The geometric shape should be taken from the fabricator's drawings or measured in the field with the aid of an engineer's level while the roof is resting on its supports.

16. Variable volume roofs

(a) Roofs such as lifter, flexible membrane, breather or balloon, may require special deadwood measurements for roof parts that are sometimes sub-merged. When these parts, such as columns, are fixed relative to the tank shell, they should be measured as deadwood in the usual way. When these parts move with the roof and hang down into the liquid, they should be deducted as fixed deadwood with the roof in the lowest position. Details may be secured from the fabricator or measured in the field.

(b) Some variable volume roofs have flexible members which may float on the surface when the membrane is deflated and the liquid level is high. The floating weight of the membrane displaces a small volume of liquid. Data on the floating weight should be secured from the fabricator and supplemented, if necessary, by field observation and measurement.

(c) Some variable volume roofs have liquid seal troughs or other appurtenances which makes the upper outside part of the shell inaccessible for outside circumference measurements. Liquid calibration of this portion of the shell may be made, or (i) theoretical dimensions may be taken from the fabricator's drawings, or (ii) the highest measurable circumferential measurement may be used as a basis for the portion of the tank that cannot be measured. When the method (i) or (ii) is used, it shall be so indicated on the calibration table.

SECTION II: CALIBRATION BY INTERNAL MEASUREMENT

17. General

(a) This method is based on the measurement of internal diameters.

(b) Diameters shall be measured only after the tank has been filled at least once at its present locations with the product to its working capacity or with water to its equivalent height, and such product or water has been held in the tank for at least 24 hours to allow for setting.

(c) The stipulated number of internal diameters shall be obtained as described under 19(a)(iv).

(d) Where practicable, an external circumference shall be measured at approximately the same height as that at which a set of diameters of which a verification is desired, has been taken. The resulting internal diameters shall be compared, and if a discrepancy is found, the measurements shall be verified.

(e) It may be necessary in practice to refer all tank dips to a datum point other than the datum point used for the purpose of tank calibration. If so, the difference in levels between these datum points shall be determined either by normal surveying methods or by other suitable means.

(f) The overall height shall be measured using dip-tape and dip-weight from the dipping datum point mentioned in (e) above to the reference point (the dipping reference point) on the dip hatch. This overall height shall be recorded and marked on the tank at the dip hatch.

18. Equipment

(a) *Steel tape*—Complying with the specification given under Part VII of Sixth Schedule. The tape shall be greased well before use.

(b) *Dynamometer*—This is used for applying tension to the steel tape.

(c) Other equipment as referred to under 8.

19. Diameter measurements

(a) *Procedure:*

(i) All diameter measurement shall be made with a tension of 4.5 ± 0.5 kg applied to the tape as indicated by the dynamometer.

(ii) All tape measurements shall be recorded as read, that is without including the length of the dynamometer.

(iii) The dynamometer length at 4.5 kg shall be taken accurately before it is put into commission, and subsequent checked before and after calibration of each tank, the final check being made before leaving the site.

(iv) The measurements shall be taken between diametrically opposite points

at the following levels on each course (ring), the minimum number allowable at each level being two on each course (ring), at right angles to each other:—

(a) For riveted tanks (see Figure 1)

(1) at 10 per cent of the height of exposed portion of each course (ring) about the level of the top of the bottom angle iron of the tank and above the upper edge of each horizontal overlap between courses (rings); and

(2) at 10 per cent of the height of exposed portion of each course (ring) below the level of the lower edge of each horizontal over-lap between courses (rings) and below the level of the lowest part of the top angle iron of the tank;

(b) For welded tanks (see Figure 2)

Two levels, the upper and the lower levels, at the top and the bottom of courses (rings), shall be 20 per cent of the height of the exposed portion of the respective course (ring) away from the angle irons or seams;

(c) All tanks

No measurement shall be taken nearer than 30 cm to any vertical seam.

(v) If for any reason it is impracticable to take measurements at the positions described above, then the diameters shall be taken as close to the proper position as practicable, but not nearer the horizontal seams than is specified under (b) above.

(vi) The levels at which measurements have been taken shall be recorded together with reasons for abandoning the prescribed level.

(vii) Measurements shall be taken with the zero end of the steel tape attached to the dynamometer, one operator placing the dynamometer on the predetermined point and the second operator placing the rule end-on to a point diametrically opposite. The tape with the graduated side wholly upwards is then pulled along the rule until the requisite tension is registered by the sounding of the buzzer in the dynamometer. The relative position of tape and rule is maintained by a firm grip until the rule is removed from the side of the tank and the measurement read on the tape at the end of the rule which was previously in contact with the tank side. The operation shall be repeated at the various positions at which measurements are required throughout the tank. The measurements shall be recorded clearly in white chalk on the steel plates in such a manner as to indicate the positions at which they were taken.

(viii) Each measurement of diameter shall be recorded to the nearest mm.

(b) All other measurement shall be followed in accordance with section I.

PART III

METHOD FOR COMPUTATION OF CAPACITY TABLES FOR VERTICAL OIL STORAGE TANKS

1. Scope

This method prescribes the methods of computation on capacity tables for vertical storage tanks intended for bulk storage of petroleum and liquid petroleum products.

2. General

(a) The calculations shall be made in accordance with the accepted mathematical principles.

(b) At the head of each capacity table it shall be clearly stated that the dip/capacity relationship applies only to dips taken at one specified point. This point shall be clearly marked on the tank, and the height of the dipping reference point shall be recorded at the head of the capacity table.

3. Form of tank tables

Provided that tank tables have been prepared in accordance with the principles laid down in this standard, the form in which the table is set out will not alter the accuracy of the figures obtained from it, but the following principles shall be applied in preparing the tank tables:—

(i) The intervals of dip at which the tables are set out shall not be so great that interpolation for intermediate dips is difficult. It is convenient to set out tables at intervals of dip not greater than 5 cm, for then a small proportional parts table, calculated on the average content of tank per unit depth, may be used for calculating the litres corresponding to inter-decimal dips. In the case of lap joints, however, the proportional parts table should be set out for every course (ring). Levels affected by bottom irregularities and deadwood shall

not be included in calculating the average capacity per unit depth used for the proportional parts table; and this table shall not be applied in interpolations at these levels.

(ii) The tables may be set out more fully; this may be justifiable in some cases where the greatest speed in calculation is desired, but it shall be remembered that a table set out on a single sheet of paper is often quicker in use than one which occupies several pages.

(iii) It should be remembered that, at best, no oil measurement can be relied upon to nearer that one part in 10,000. Commercial tables should never be set out to show any fractions of a litre, and minor discrepancies within this limit shall be disregarded.

(iv) In general, therefore, it is recommended that tables should be set out to show litres at intervals of 5 cm in dip with a proportional parts table for intermediate dips, the latter being set out against millimetres.

(v) A recommended format of a calibration chart for butt welded tanks is given in Table 2.

SECTION I : STRAPPING METHOD

4. Corrections to be applied to measured circumferences

(a) Step overs :

(i) For each obstruction the excess or deficiency of the tape measurement spanning the obstruction as compared with the step-over interval for the course (ring) concerned shall be subtracted from or added to the circumference figure obtained by strapping, and the result shall be taken as the corrected circumference, free from error due to the displacement of the tape from its proper path by the obstruction concerned.

(ii) Step-over correction shall be included for all vertical seams where it is detectable in the case of vertical seams provided that the tape path used and entirely clear of rivet heads, an average step-over correction may be determined for each course (ring) and multiplied by the number of seams per course (ring) to obtain the total correction to be applied to the measured circumference of that course (ring) to compensate for such overlaps.

(iii) For single obstructions, only step-over corrections 2 mm or over shall be included.

(iv) The use of the step-over corrects circumferences for the effect on them of vertical seam overlaps but does not correct the tank tables for the effect as deadwood of internal projections of the seam edges. These shall be computed and accounted for as deadwood.

(v) By choosing tape courses in order to avoid appurtenances, use of step-overs could be eliminated to a great extent.

(b) Plate thickness

Plate thickness measured shall be recorded to the nearest 0.1 mm.

(c) Temperature correction

Where the strapping and dipping tapes are calibrated at 20° C, and the tank table is to be corrected for use with the shell at 15°C, from each measured circumference shall be subtracted 0.000 09 times the measured circumference, before the figure is taken into further calculation.

5. Calculations

(a) The mean external circumference of any course (ring) shall be the average of the circumferences measured on it and corrected to the nearest 0.1 mm.

(b) The mean internal circumference of the course (ring) shall then be calculated from the mean external circumference of the course (ring) by subtracting from the latter 2 π times the plate thickness in metres.

(c) The open capacity of each course (ring), that is, its capacity without allowing for deadwood shall be calculated as if the course (ring) were a true cylinder of the mean internal circumference determined as under (b) above. This rule shall apply to vertical cylinders of in-and-out, telescopic or shingled construction.

(d) The open capacity of each course (ring) in litres per centimetre of height shall be obtained by using either the following formula or any other mathematically equivalent process:—

Open capacity in litres per centimetre

$$= \frac{C^2 X 10000}{4\pi X 1000.028}$$

or $0.795\,752 \times C^2$

where—

C = the mean internal circumference in metres and p = 3.14158

(e) For tanks which are inclined to the vertical, these formulae shall be modified as given in clause 11.

(f) Specimen calculations are given in clause 12.

SECTION II : INTERNAL MEASUREMENT METHOD

6. Corrections to be applied to diameter measurements

(a) Deductions shall be made from the average tape readings obtained in measuring diameters to allow for the effect of sag. The correction Z for sag expressed in metre is given by the formula :

$$Z = \frac{W^2S^3}{24P^2} = KS^3$$

where

P = pull on tape in kg,

S = span of tape i.e., outside circumference of the tank in m,

W = weight of tape in kg/m, and

$K = W^2/24P^2$ = constant

Example : For a tape 10 mm wide and 0.25 mm thick, made of steel of density 7.850 kg/m^3, values of K to give the correction in centimetres when the tape is stretched with flat side horizontal, will be :

P	K
4.4 kg	8.29×10^{-5}
4.5 kg	7.92×10^{-5}
4.6 kg	7.58×10^{-5}

The above formula gives practically the same results as the equation of the catenary and is less cumbersome.

(b) To the average diameter of each course (ring), corrected for sag, add the length of the dynamometer when registering a pull of 4.5 kg.

(c) Corrections for the effect of stretch are unnecessary because the tension applied is that at which the tape is standardized.

(d) Corrections for temperature shall be made as specified in 7(c).

7. Calculations

(a) The mean diameter measurement will consist of the average, of the separate tape readings corrected for sag, plus the length of the dynamometer.

(b) The procedure shall, therefore, be :

(i) Average the tape readings obtained for each course (ring), by dividing the sum of all these readings on the course (ring) by their number. Round off this average to the nearest 0.1 mm

(ii) Correct the mean result of (i) for sag as specified in 6(a).

(iii) Add to the result of (ii) the dynamometer length as specified in 6 clause (b).

(c) Where the measuring and dipping tapes are calibrated at 20°C, and the tank table is to be correct for use with the shell at 15°C, multiply the result obtained in (b)(iii) above by (1—0.000 09), before the figure is taken into further calculation. Round off this figure to the nearest 0.1 mm.

(d) Calculate the open capacity of each course (ring) that is its capacity without allowing for deadwood, as if the course (ring) were a true cylinder of the mean internal diameter determined under (b) above. This rule shall apply to vertical cylinders of in-and-out telescopic or shingled construction.

(e) The open capacity of each course (ring) in litre per centimetre of height shall be obtained by using the following formula or by any other mathematically equivalent process:

$$\frac{D^2 X \pi}{1000.028X4} \text{ or } 0.000785\,376 \times D^2$$

where

D = the mean internal diameter in centimetres.

(f) For tanks which are inclined to the vertical, modify these formulae as given in 11.

(g) When the level or levels from which oil depths will be measured differ from the datum level from which the tank table is first prepared, correction for difference shall be made in the final table.

(h) Specimen calculations are given in clause 13.

8. Deadwood

(a) The open capacity of each course (ring) shall be adjusted for any deadwood it contains.

(b) The total volume of each piece of deadwood shall be calculated to the nearest litre. In this context, the term 'piece of deadwood' shall include such items as the rivet heads in one line around the tank, taken collectively, as a single 'piece' of deadwood.

(c) The effect of small pieces of deadwood may be neglected provided that (i) the total effect of any such neglect shall not lead to error in the tank tables exceeding 0.005 per cent of the total capacity of the course (ring) in which the deadwood occurs, and (ii) any deadwood so neglected is distributed evenly, or substantially so, over the whole height of the course

(ring), in calculating the table, however, it shall be permissible to include the effect of any deadwood, however small.

9. Tank bottoms

(a) When the tank bottom is substantially horizontal, for example, when the tank is carried on a level concrete raft or steel structure, then bottom irregularities can be neglected.

(b) When the tank bottom has been calibrated by measuring in suitable known volumes of liquid, the tank table for these levels shall be prepared from these measurements on sound mathematical principles. The highest level and capacity shown in the tank bottom calibration table so prepared shall then be the datum level and capacity from which is to be constructed. The rest of the table should be prepared by calculation as described in this section.

10. Floating roof tank

(a) Except for the following modifications, tables shall be prepared in accordance with Section I and Section II :

(i) Allowance for deadwood shall be made as described in clause 8.

(ii) The drain line and other accessories attached to the underside of the roof shall be included as fixed deadwood in the position they occupy when the roof is at rest on its supports. The position of these accessories should be specified in the calibration table.

(iii) Two levels shall be defined, both an exact number of centimetre above the datum point from which dip readings will be taken. The first level, designated A, shall be not less than 4 cm and not more than 6 cm below the lowest point of the roof plates when the roof is at rest. The second level, designated B, shall be not less than 4 cm and not more than 6 cm above the free oil surface when the roof is at its lowest oil borne position.

(iv) The floating weight of the entire roof shall include weight of roof plus half the weight of the rolling ladder and other hinged and flexibly supported accessories that are carried up and down in the tank with the roof.

The displaced volume due to roof weight can be easily calculated from :

Roof weight in kg/ Density of stock in kg per litre at tank temperature

The displacement, minus the volume of deadwood already accounted for in (ii) above, shall be considered as an item of deadwood applicable to all levels above B. It shall either be entered as such on a supplementary table or taken into account in the preparation of the final table as a deduction for deadwood at all levels above B. For levels between A and B, the proportion of roof displacement to be taken into account as deadwood may be calculated from the dimensions of the floating roof. These partial displacements shall either be entered as such in the supplementary table as applicable for levels between A and B, or taken into account in preparation of final table. Alternatively where measured quantities of oil have been admitted to the tank and corresponding levels of the free oil surface determined by dipping, the necessary adjustments to the tank capacity within the range of the levels A and B may be computed from this data. The part of the table between levels A and level B shall be marked 'not accurate'.

(v) It is considered impracticable to allow in the tank table, for the effects of extraneous matter retained by the roof, varying friction of the roof shoes and varying immersion of roof supports.

11. Computation of contents of tanks inclined to the vertical

[*See clauses 5(e) and 7(f)*]

(a) Tanks inclined to the vertical :

(i) Capacity as determined in 5(e) and 7(e) applies to tanks which are vertical. For tanks inclined to the vertical at an angle θ, the open capacity in litres per centimetre of vertical height, is given by :—

$$0.795\,752 \times C^2 \times \text{Sec}\,\theta$$

Where C = the mean internal circumference in metres.

OR

$$0.000785\,376 \times D^2 \times \text{Sec}\,\theta$$

where

D = the mean internal diameter in centimetres.

Secθ may be ignored for angles of tilt up to 1 in 50, this representing a maximum error of 0.02 per cent.

(ii) The correction specified above shall be applied before the corrections for deadwood are made.

[*See clause 5(f)*]

12. Example for strapping method

(a) Data obtained by strapping

Course (ring) No.	*Measured external circumferences metres*	*Stepover corrections metres*	*Plate thickness mm*	*Internal heights of courses (rings) Individual cm*	*Cumulative cm*
8 Top	113.040	0.002	7		
8 Middle	113.086	0.002	7	187.0	1475.0
8 Bottom	113.085	0.002	7		
7 Top	113.127	0.002	7		
7 Middle	113.133	0.002	7	179.0	1288.0
7 Bottom	113.130	0.002	7		
6 Top	113.090	0.003	10		
6 Middle	113.096	0.003	10	190.0	1109.0
6 Bottom	113.092	0.003	10		
5 Top	113.152	0.004	13		
5 Middle	113.160	0.004	13	179.0	919.0
5 Bottom	113.155	0.004	13		
4 Top	113.085	0.010	13		
4 Middle	113.092	0.010	13	191.0	740.0
4 Bottom	113.090	0.010	13		
3 Top	113.175	3.010	16		
3 Middle	113.176	0.010	16	178.0	549.0
3 Bottom	113.170	0.010	16		
2 Top	113.077	0.013	18		
2 Middle	113.081	0.013	18	191.0	371.0
2 Bottom	113.075	0.013	18		
1 Top	113.187	0.015	20		
1 Middle	113.189	0.015	20	180.0	180.0
1 Bottom	113.175	0.015	20		

(b) Additional data

(i) Deadwood

Course (ring) No.	Applicable height cm	Deadwood litres	Deadwood 1/cm	Total deadwood in courses litres
8	1466 to 1475	-350	-38.889	
8	1415 to 1466	-508	-9.961	
8	1350 to 1415	2336	-35.938	
8	1288 to 1350	nil	nil	-3 194
7	1109 to 1288	nil	nil	
6	919 to 109	nil	nil	
5	740 to 919	nil	nil	
4	549 to 740	-195	-1.021	-195
3	371 to 549	-259	-1.455	-259
2	180 to 371	-309	-1.618	-309
1	107 to 180	-145	-1.986	
1	51 to 107	-59	-1.054	
1	46 to 51	-36	-7.200	
1	0 to 46	nil	nil	-122

(ii) Tape calibration temperature 20°C

(iii) Condition of tank at time of strapping :

Water in tank to depth of 1400 cm

Water temperature 20°C

Density of water at 20°C 1 000 kg/l

(c) Calculation of corrected internal circumferences course (ring) No. 8 top

Measured external circumference at 20°C 113.040 0 m

Correction for calibration temperature of tape -.0.0010 2 m

Calculated external circumference at 15°C 113.029 8 m

Step-over correction -0.002 0 m

Correction for plate thickness

$7 \times 2\pi = 7 \times 6.2832$ mm -0.044 0 m

Corrected internal circumference 112.983 8 m

(Calculation for other courses may be done in a similar way)

The corrected internal circumferences for the remaining measurements given above are shown below.

(d) Calculation of open capacity of courses (rings)

Course (ring) No.	*Corrected internal circumference m*	*Mean internal circumference m*	*Open capacity of course (ring)*	
			l/cm	*litres*
8 Top	112.983 8			
8 Middle	113.029 8	113.014	10 163.48	1 900.571
8 Bottom	113.029 8			
7 Top	113.070 8			
7 Middle	113.076 8	113.073 8	10 174.22	1 821.185
7 Bottom	113.073 8			
6 Top	113.014 0			
6 Middle	113.020 0	113.016 4	10 163.95	1 931.150
6 Bottom	113.016 0			
5 Top	113.056 1			
5 Middle	113.064 1	113.059 8	10 171.70	1 820.734
5 Bottom	113.059 1			
4 Top	112.983 1			
4 Middle	112.990 1	112.987 1	10 158.62	1 940.296
4 Bottom	112.988 1			
3 Top	113.054 3			
3 Middle	113.005 3	113.053 0	10 170.48	1 810.345
3 Bottom	113.049 3			
2 Top	112.940 7			
2 Middle	112.944 7	112.941 4	10 150.41	1 938.428
2 Bottom	112.938 7			
1 Top	113.036 1			
1 Middle	113.038 1	113.032 8	10 166.84	1 830.031
1 Bottom	113.024 1			
Total				14 993.040

(e) Calculation of net capacity or courses (rings)

Oil dip cm	*Open capacity l/cm*	*Deadwood l/cm*	*Net capacity l/cm*
0 to 46	10 166.84	Nil	10 166.84
46 to 51	10 166.84	- 7.20	10 159.64
51 to 107	10 166.84	+ 1.05	10 167.89
107 to 180	10 166.84	-1.99	10 164.85
180 to 371	10 150.41	-1.62	10 148.79
371 to 549	10 170.48	-1.46	10 169.02
549 to 740	10 158.62	-1.02	10 159.60
740 to 919	10 171.70	nil	10 171.70
919 to 1109	10 163.95	nil	10 163.95
1109 to 1288	10 174.22	nil	10 174.22
1288 to 1350	10 163.48	nil	10 163.48
1350 to 1415	10 163.48	-35.94	10 127.54
1415 to 1466	10 163.48	-9.96	10 153.52
1466 to 1475	10 163.48	-38.89	10 124.54

13. Example for internal measurement method **[See clause 7(h)]**

(a) Data obtained by internal measurement—

(i) In this example it is assumed that the same tank as in 12 has been calibrated by internal measurement. The means of each course (ring) of the tape measurements of the internal diameters are as in col. 2 of the table in (d) below :

Dynamometer length at a tension of 4.5 kg = 21.30 cm

(b) Additional data

(i) All course (ring) height deadwood, etc., are the same as in 12.

(c) Sag correction

(i) For a tension of 4.5 kg, the sag correction for course (ring) No. 1 is :

$$7.89 \times 10^{-5} (35.7878)^3 = 3.61 \text{ cm.}$$

(d) Calculation of corrected internal diameter course (ring) No. 1

Mean tape reading for diameter	3 578.78 cm
Sag correction (deduct)	3.61 cm
Corrected tape reading	3 575.17 cm
Dynamometer length (add)	21.30 cm
Measured internal diameter at 20°C	3 596.47 cm
Correction for calibration temperature of tape (deduct)	0.32 cm
Corrected internal diameter at 15°C	3 596.15 cm

The corresponding tape readings and corrected internal diameters calculated as shown above, for all courses (rings) are tabulated below :

Course (ring) No.	*Mean tape reading* *cm*	*Mean tape reading for diameter corrected for sag and dynamometer* *cm*	*Mean internal diameter corrected for tape calibration temperature* *cm*
8	3 579.75	3 597.44	3 597.12
7	3 580.92	3 598.61	3 598.29
6	3 578.90	3 596.59	3 596.27
5	3 580.12	3 597.81	3 597.49
4	3 577.50	3 595.20	3 594.88
3	3 579.47	3 597.26	3 596.84
2	3 576.95	3 593.65	3 593.33
1	3 578.78	3 596.47	3 596.15

(e) Calculation of open capacity of courses (rings)

Course (ring) No.	*Open capacity of course (ring)* *l/cm*	*Open capacity of course (ring)* *litres*
8	10 162.17	1 900 326
7	10 168.79	1 820 213
6	10 157.37	1 929 900
5	10 164.27	1 819 404
4	10 149.52	1 938 558
3	10 160.59	1 808 585
2	10 140.77	1 936 887
1	10 156.69	1 828 204
	Total :	14 982 077

(f) Calculation of net capacity of course (ring)

Oil dip (cm)	*Open capacity (l/cm)*	*Deadwood (l/cm)*	*Net capacity (l/cm)*
0 to 46	10 156.69	nil	10 156.69
46 to 51	10 156.69	-7.20	10 149.49
51 to 107	10 156.69	+ 1.05	10 157.74
107 to 180	10 156.69	- 1.99	10 154.70
180 to 371	10 140.77	- 1.62	10 139.15
371 to 549	10 160.59	-1.46	10 159.13
549 to 740	10 149.52	-1.02	10 148.50
740 to 919	10 164.27	nil	10 164.27
919 to 1 109	10 157.37	nil	10 157.37
1 109 to 1 288	10 168.79	nil	10 168.79
1 288 to 1 350	10 162.17	nil	10 162.17
1 350 to 1 415	10 162.17	- 35.94	10 126.23
1 415 to 1 466	10 162.17	- 9.96	10 152.21
1 466 to 1 475	10 162.17	- 38.89	10 123.28

TABLE 2

[See Clause 3(a)/(v)]

RECOMMENDED FORMAT OF A CALIBRATION CHART FOR BUTT WELDED TANKS

Tank No. .....

Code .....

Type .....

Diameter or

Circumference.....

Height.....

Proportional parts

mm litres	*cm litres*	*cm litres*	*cm litres*	*cm litres*	*cm litres*	*cm litres*	*cm litres*	*cm litres*
1	00	200	400	600	800	1000	1200	1400
2	05	05	05	05	05	05	05	05
3	10	10	10	10	10	10	10	10
4	15	15	15	15	15	15	15	15
5	20	20	20	20	20	20	20	20
6	25	25	25	25	25	25	25	25
7	30	30	30	30	30	30	30	30
8	35	35	35	35	35	35	35	35
9	40	40	40	40	40	40	40	40
10	45	45	45	45	45	45	45	45
11	50	250	450	650	850	1050	1250	1450
12	55	55	55	55	55	55	55	55
13	60	60	60	60	60	60	60	60
14	65	65	65	65	65	65	65	65

mm litres	*cm litres*	*cm litres*	*cm litres*	*cm litres*	*cm litres*	*cm litres*	*cm litres*	*cm litres*
15	70	70	70	70	70	70	70	70
16	75	75	75	75	75	75	75	75
17	80	80	80	80	80	80	80	80
18	85	85	85	85	85	85	85	85
19	90	90	90	90	90	90	90	90
20	95	95	95	95	95	95	95	95
21	100	300	500	700	900	1100	1300	1500
22	05	05	05	05	05	05	05	05
23	10	10	10	10	10	10	10	10
24	15	15	15	15	15	15	15	15
25	20	20	20	20	20	20	20	20
26	25	25	25	25	25	25	25	25
27	30	30	30	30	30	30	30	30
28	35	35	35	35	35	35	35	35
29	40	40	40	40	40	40	40	40
30	45	45	45	45	45	45	45	45
31	150	350	550	750	950	1150	1350	1550
32	55	55	55	55	55	55	55	55
33	60	60	60	60	60	60	60	60
34	65	65	65	65	65	65	65	65
35	70	70	70	70	70	70	70	70
36	75	75	75	75	75	75	75	75
37	80	80	80	80	80	80	80	80
38	85	85	85	85	85	85	85	85
39	90	90	90	90	90	90	90	90
40	95	95	95	95	95	95	95	95
41								
42								
43								
44								
45								
46			Data regarding strapping, dimensions, etc.					
47								
48	Approved				Signature		Date	
49								

TENTH SCHEDULE

APPLICATION FORM FOR REGISTRATION OF IMPORTER OF WEIGHTS AND MEASURES

[See Rule 15]

To

The Director of Legal Metrology,
Government of India,
New Delhi.

Sir,

I/We* hereby apply for registration of my/our* name(s) as importer of weights and/or measures.

Particulars with regard to items specified in the table below are given against each such item. The registration fee of Rs. ..... has been paid in the treasury at..... vide Chalan No. ..... dated..... enclosed.

1. Name and full address :
2. Whether individual/undivided Hindu family/registered firm :
3. Income-tax registration No. (if any):
4. Date of registration as manufacturer/dealer; registration No. and name of registering authority :
5. Date & No. of the licence to carry on the business of weights and measures; the name of authority by whom the licence was issued/renewed :
   (a) buying and selling, or
   (b) manufacturing.
6. Item(s) of weights and measures in relation to which the applicant has been registered as manufacturer and/or dealer :
7. Items of weights and measures for which application is being made for registration as importer:
8. Items, if any, imported during the period of two years immediately preceding the year in which the application is made :
9. Remarks :

Signature

**Delete which is not applicable.*

ELEVENTH SCHEDULE

REGISTER TO BE MAINTAINED BY THE MANUFACTURERS OF WEIGHTS AND MEASURES

[See Rule 24]

1. Name and address of the manufacturer.....
2. Description of the weight or measure .....
3. (i) No. of the manufacturing licence.....
   (ii) Date on which the licence was issued.....
   (iii) Period of validity of the licence.....
4. Particulars of order, if any, suspending or revoking the licence .....

Sl. No.	Month	Unsold stock from previous month	Quantity manufactured during the month	Total 3 + 4	Sold within the State		Sold outside the State			Total sold 6 + 9	Balance 5-11	Remarks.
					No. of items sold	Despatch voucher No. and Date	Name of the State	No. of items sold	Despatch voucher No. and Date			
1	2	3	4	5	6	7	8	9	10	11	12	13

474 GI/11-164

REGISTER TO BE MAINTAINED BY THE REPAIRERS IN RESPECT OF WEIGHTS OR MEASURES RECEIVED FROM OTHER STATES

[See Rule 24]

Name and address of the repairer..... Licence No. : .....

Date of licensing : .....

Sl. No.	Date	State from which received	Items & their Nos. booked for repair	Receipt No. & date of issue to the user	Amount of repairing charges	Amount of verification fee	Total amount charged	Date of return to the user	Remarks
1	2	3	4	5	6	7	8	9	10

REGISTER TO BE MAINTAINED BY DEALERS IN WEIGHTS AND MEASURES

[See Rule 24]

1. Name and address of the dealer.....
2. Description of the weight or measure .....
3. (i) Licence No. .....
   (ii) Date on which the licence was issued.....
   (iii) Period of validity of the licence.....
4. Particulars of order, if any, suspending or revoking the licence .....
5. Category of weight or measure (Category A or B).....

(Category A or B)

Sl. No.	Month	Unsold stock from previous month	Brought within the State during the month	Brought from outside the State during the month	Total 3 + 4 + 5	Sold within the State		Sold outside the State			Total sold 7 + 9	Balance 6-12	Remarks
						No. of items sold	Despatch voucher No. and Date	No. of items sold	Despatch voucher No. and Date	Name of the state			
1	2	3	4	5	6	7	8	9	10	11	12	13	14

TWELFTH SCHEDULE

SCALE OF FEE

[See Rule 25]

1. Approval of model	At the rates specified in the Legal Metrology (Approval of Model) Rules, 2011 subject to the condition that total fee so charged is not more than Rs. 10,000/-
2. Verification and stamping of any Type of Weights and Measures:	Weights and Measures specified in the Legal Metrology (General) Rules, 2011 at total fee so charged is not more than Rs. 5,000/-

1	2	3	4	5	6	7	8	9	10	11	12	13	14

3.	Issue of a copy of any document not being a document of a confidential nature	At the rate of Rs. 10 for every 100 words or part thereof.
4.	Registration/Renewal of registration of any person as an importer.	Rs. 500.00
5.	Application fee for preferring any appeal under the Act to the Director/Controller	Rs. 100.00
6.	Application fee for preferring any appeal under the Act to the Central/State Government	Rs. 200.00

THIRTEENTH SCHEDULE

Format for nomination of the Director by the Company

[See Rule 29]

Notice is hereby given that Shri/Smt/Ms ..... Director of the ..... (name and address of the company) has been nominated by the company by a Resolution passed at their meeting held on ..... at ..... to be incharge of, and be responsible for the conduct of business of the company or any establishment/branch/unit thereof and authorized to exercise all such powers and take all such steps as may be necessary or expedent to prevent the commission any offence by the said company under the Legal Metrology Act, 2009.

Shri/Smt/Ms. ....., Designation ..... has accepted the said nomination and copy of said acceptance is enclosed herewith.

A certified copy of the said Resolution is also enclosed.

Place :..... Managing Director/Secretary of

Date :..... (name of the company)

Note : Score out the portion which is not applicable.

[File No. WM-9(6)/2010-pt.]

RAKESH KACKER, Special Secy.

Printed by the Manager, Government of India Press, Ring Road, Mayapuri, New Delhi-110064
and Published by the Controller of Publications, Delhi-110054.